APPENDIX 1-A

SITE PHOTOGRAPHS

(34 Pages)

Knight Piésold
CONSULTING

MINE SITE PHOTOGRAPHS

NB301-520/2-1
Rev 0
September 15, 2015

PHOTO 1 – Mine site - south pit area. A KP testpit in the foreground. Photo facing the river. The testpit is located within the occasional tidal zone. Reed and then mangroves in the background.

PHOTO 2 – Mine site - south pit area - near Waypoints 106-108, cattle grazing and evidence of salt accumulation on the flats. This area is used for salt production.

PHOTO 3 – Mine site - south pit area - evidence of recent burning of vegetation to support agriculture.

PHOTO 4 – Mine site - south pit area - piles of sand that will be collected, washed and evaporated for salt production.

PHOTO 5 – Mine site - south pit area - salt production area.

PHOTO 6 – Mine site salt production. The sand is washed and filtered, and the resultant wash below is then boiled.

PHOTO 7 – Mine site salt production. The salty wash water is evaporated in pans.

PHOTO 8 – Mine site salt production - evaporation of the salty wash water.

PHOTO 9 – Salt production area - crushing of palm nuts for eating and to produce oils.

PHOTO 10 – Mine site - south pit area - beno fields.

PHOTO 11 – Beno fields at mine site.

PHOTO 12 – Rice fields at mine site.

PHOTO 13 – Rice fields at mine site.

PHOTO 14 – Rice fields at mine site.

PHOTO 15 – Mine site - the road from Farim to Ponta Zega and Saliquinhe.

PHOTO 16 – Mine site - an abandoned house in Ponta Zega.

PHOTO 17 – Mine site area - a typical home in Saliquinhe.

PHOTO 18 – Mine site area – Mosque in Saliquinhe.

PHOTO 19 – Mine site area - school in Saliquinhe.

PHOTO 20 – Mine site area - other homes in Saliquinhe.

PHOTO 21 – Mine site - north pit area - facing north at the box cut (a previous test mining area from the mid-1980s).

PHOTO 22 – Mine site - north pit area - facing north across the box cut. Residents are carrying out irrigation farming on the far side of the box cut.

PHOTO 23 – A typical home in Saliquinhe.

PHOTO 24 – Mosque in Saliquinhe.

PHOTO 25 – Mine site area - village of Tambato south of north pit.

PHOTO 26 – Mine site area - road towards Cansenha and between tailings and overburden storage facilities. The area in the photo is wet and within the tide influenced zone.

PHOTO 27 – Mine site area - bridge crossing of Rio de Caur, west of the tailings and overburden storage areas.

PHOTO 28 – Mine site area - facing east returning from the Rio de Caur bridge crossing. The tree line is thought to be the demarcation of the floodplain.

PHOTO 29 – Mine site area - north end of the village of Canico (football field on the left).

PHOTO 30 – Mine site area - agricultural fields.

PHOTO 31 – Mine site area - rice fields.

PHOTO 32 – Mine site area - rice fields.

PHOTO 33 – Mine site area - general area of sacred site located south of Saliquinhe.

PHOTO 34 – Mine site area - Rio de Bunja crossing between Farim and Saliquinhe - an upstream current from rising tides was evident.

PHOTO 35 – Mine site area - Village of Bani.

PHOTO 36 – Mine site area - entering Farim from the east. Note the powerlines. There has been a lack of grid power in Farim for about 10 years, but new generators are reportedly being installed.

Knight Piésold
CONSULTING

TRANSPORT ROUTE PHOTOGRAPHS

NB301-520/2-1
Rev 0
September 15, 2015

PHOTO 1 – A bus stop at Saliquenhedim, 3 km south of the ferry crossing at Farim. Newly surfaced section of the Bissau-Farim highway.

PHOTO 2 – Resurfaced section of the Bissau-Farim highway at Bironque.

PHOTO 3 – Bicycle traffic on a paved shoulder, on the newly surfaced section of highway, south of Mansaba.

PHOTO 4 – Pedestrian traffic on the highway within the central part of Mansoa.

PHOTO 5 – The older paved section of the Bissau-Farim highway, south of Mansoa and north of the port site turnoff at Dugal.

PHOTO 6 – The unpaved road into the port site, between Dugal and Cunteda.

PHOTO 7 – Typical canoes (beached at the Farim ferry crossing).

PHOTO 8 – Canoes beached at the Ponta Chugue port site.

Knight Piésold
CONSULTING

PORT SITE PHOTOGRAPHS

NB301-520/2-1
Rev 0
September 15, 2015

PHOTO 1 – The small beach area adjacent the port site.

PHOTO 2 – Facing south across the entrance of the small beach area at the future dock location.

PHOTO 3 – Facing north along the coastline at low tide.

PHOTO 4 – A sacred site located on the point north of the port site and beach area.

PHOTO 5 – Facing south from the point where the dock will be located. The port development area will be along this shoreline but inland of the mangroves.

PHOTO 6 – A monument at the dock location.

PHOTO 7 – Facing north from the dock location across the small beach area. The women in the photograph come to this location to buy fish that they will sell in other towns.

PHOTO 8 – A fisherman retrieving a portion of his catch to sell.

PHOTO 9 – Fisherman handing fish to the local sellers.

PHOTO 10 – The catch is mainly or exclusively catfish.

PHOTO 11 – One of the fisherman returns to the beach area using a sail.

PHOTO 12 – Fisherman lowering the sails.

PHOTO 13 – Fisherman and families congregating at the beach area next to the port site.

PHOTO 14 – Fisherman and families congregating at the beach area next to the port site.

PHOTO 15 – Port site - fishermen repairing nets in the small bay next to the proposed port site.

PHOTO 16 – Port site - women and children congregating with the fishermen in the small bay next to the proposed port site.

PHOTO 17 – Port site - small row field next to the port site.

PHOTO 18 – Port site - arriving at the small field next to the port area.

APPENDIX 1-B

ENGINEERING DRAWINGS

Appendix 1-B1 General Arrangement Drawings
Appendix 1-B2 Mining and Pit Backfilling Method
Appendix 1-B3 Mine Plan Drawings at Key Years
Appendix 1-B4 Process Design Criteria
Appendix 1-B5 Shiploading Drawings

APPENDIX 1-B1

GENERAL ARRANGEMENT DRAWINGS

(12 Pages)

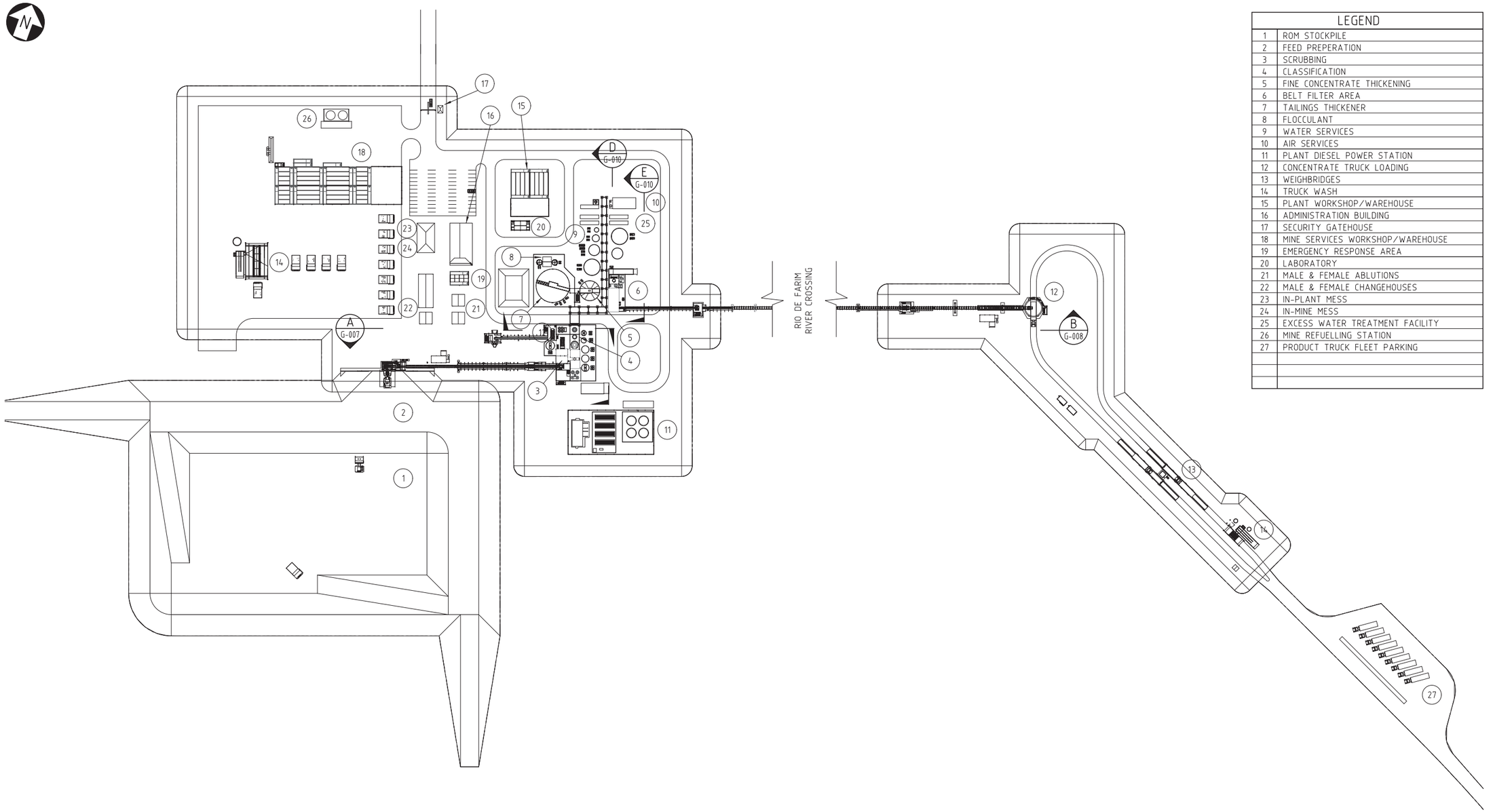

LEGEND	
1	ROM STOCKPILE
2	FEED PREPERATION
3	SCRUBBING
4	CLASSIFICATION
5	FINE CONCENTRATE THICKENING
6	BELT FILTER AREA
7	TAILINGS THICKENER
8	FLOCCULANT
9	WATER SERVICES
10	AIR SERVICES
11	PLANT DIESEL POWER STATION
12	CONCENTRATE TRUCK LOADING
13	WEIGHBRIDGES
14	TRUCK WASH
15	PLANT WORKSHOP/WAREHOUSE
16	ADMINISTRATION BUILDING
17	SECURITY GATEHOUSE
18	MINE SERVICES WORKSHOP/WAREHOUSE
19	EMERGENCY RESPONSE AREA
20	LABORATORY
21	MALE & FEMALE ABLUTIONS
22	MALE & FEMALE CHANGEHOUSES
23	IN-PLANT MESS
24	IN-MINE MESS
25	EXCESS WATER TREATMENT FACILITY
26	MINE REFUELLING STATION
27	PRODUCT TRUCK FLEET PARKING

PLAN

DRG No	REFERENCE DRAWINGS	REV	DATE	DESCRIPTION	DRN	CHK'D	DESIGN ENG.	LEAD ENG.	DESIGN APP'D	PROJ. APP'D	CLIENT APP'D
		C	05AUG15	ISSUED FOR STUDY	ANM				IM	DM	
		B	06FEB15	ISSUED FOR CLIENT REVIEW	SH				IM	DM	
		A	05DEC14	ISSUED FOR REVIEW	SH				IM	DM	

CLIENT GB MINERALS LTD.

PROJECT FARIM PHOSPHATE PROJECT

Lycopodium

Lycopodium Minerals Canada Ltd Corp. No: 767 852-5
5060 Spectrum Way, Suite 400, Mississauga, Ontario L4W 5N5
T: (905) 206 2600 www.lycopodium.com.au

KEMWorks
231 N Kentucky Ave Lakeland ı Florida ı USA
+1.863.682.5369 www.kemworks.com

GBMINERALS LTD

DRAWN	CHECKED	DESIGN ENG.	LEAD ENG.	DESIGN APP'D	PROJ. APP'D	CLIENT APP'D

DRAWING TITLE
PROCESS PLANT
GENERAL ARRANGEMENT
PLAN

SCALE	JOB No.	DRG No.	REV.
1:1250	5036	101-G-002	C

DRAWN SH DATE 18NOV14

T:\Drafting\Studies\5036 - Farim Phosphate Study\G\5036 101G002.dgn, 05-Aug-15 12:40:45 PM, stuart.hallam, ISO B1

A1

DRG No	REFERENCE DRAWINGS	REV	DATE	DESCRIPTION	DRN	CHK'D	DESIGN ENG.	LEAD ENG.	DESIGN APP'D	PROJ. APP'D	CLIENT APP'D
		B	05AUG15	ISSUED FOR STUDY	ANM				IM	DM	
		A	06FEB15	ISSUED FOR CLIENT REVIEW	SH				IM	DM	

CLIENT GB MINERALS LTD.

PROJECT FARIM PHOSPHATE PROJECT

Lycopodium

Lycopodium Minerals Canada Ltd Corp. No: 767 852-5
5060 Spectrum Way, Suite 400, Mississauga, Ontario L4W 5N5
T: (905) 206 2600 www.lycopodium.com.au

KEMWorks
231 N Kentucky Ave Lakeland | Florida | USA
+1.863.682.5369 www.kemworks.com

GBMINERALS LTD

DRAWN	CHECKED	DESIGN ENG.	LEAD ENG.	DESIGN APP'D	PROJ. APP'D	CLIENT APP'D

DRAWING TITLE
PROCESS PLANT
GENERAL ARRANGEMENT
PICTORIAL VIEW 1

SCALE		JOB No.	DRG No.	REV.
N.T.S.		5036	101-G-003	B
DRAWN SH	DATE 18NOV14			

T:\Drafting\Studies\5036 - Farim Phosphate Study\G\5036 101G003.dgn, 05-Aug-15 12:39:25 PM, stuart.hallam, ISO B1

A1

DRG No	REFERENCE DRAWINGS	REV	DATE	DESCRIPTION	DRN	CHK'D	DESIGN ENG.	LEAD ENG.	DESIGN APP'D	PROJ. APP'D	CLIENT APP'D
		B	05AUG15	ISSUED FOR STUDY	ANM				IM	DM	
		A	06FEB15	ISSUED FOR CLIENT REVIEW	SH				IM	DM	

CLIENT GB MINERALS LTD.

PROJECT FARIM PHOSPHATE PROJECT

Lycopodium

Lycopodium Minerals Canada Ltd Corp. No: 767 852-5
5060 Spectrum Way, Suite 400, Mississauga, Ontario L4W 5N5
T: (905) 206 2600 www.lycopodium.com.au

KEMWorks

231 N Kentucky Ave Lakeland ı Florida ı USA
+1.863.682.5369 www.kemworks.com

GBMINERALS LTD

DRAWN	CHECKED	DESIGN ENG.	LEAD ENG.	DESIGN APP'D	PROJ. APP'D	CLIENT APP'D

DRAWING TITLE
PROCESS PLANT
GENERAL ARRANGEMENT
PICTORIAL VIEW 2

SCALE	JOB No.	DRG No.	REV.
N.T.S.	5036	101-G-004	B

DRAWN SH | DATE 18NOV14

T:\Drafting\Studies\5036 - Farim Phosphate Study\G\5036 101G004.dgn, 05-Aug-15 12:44:52 PM, stuart.hallam, ISO B1

A1

DRG No	REFERENCE DRAWINGS	REV	DATE	DESCRIPTION	DRN	CHK'D	DESIGN ENG.	LEAD ENG.	DESIGN APP'D	PROJ. APP'D	CLIENT APP'D
		C	05AUG15	ISSUED FOR STUDY	ANM				IM	DM	
		B	06FEB15	ISSUED FOR CLIENT REVIEW	SH				IM	DM	
		A	05DEC14	ISSUED FOR REVIEW	SH				IM	DM	

CLIENT GB MINERALS LTD.

PROJECT FARIM PHOSPHATE PROJECT

Lycopodium

Lycopodium Minerals Canada Ltd Corp. No: 767 852-5
5060 Spectrum Way, Suite 400, Mississauga, Ontario L4W 5N5
T: (905) 206 2600 www.lycopodium.com.au

KEMWorks
231 N Kentucky Ave Lakeland ı Florida ı USA
+1.863.682.5369 www.kemworks.com

GBMINERALS LTD

DRAWN	CHECKED	DESIGN ENG.	LEAD ENG.	DESIGN APP'D	PROJ. APP'D	CLIENT APP'D

DRAWING TITLE
PROCESS PLANT
GENERAL ARRANGEMENT
PICTORIAL VIEW 3

SCALE	JOB No.	DRG No.	REV.
N.T.S.	5036	101-G-005	C

DRAWN SH DATE 18NOV14

T:\Drafting\Studios\5036 - Farim Phosphate Study\G\5036 101G005.dgn, 05-Aug-15 12:16:17 PM, stuart.hallam, ISO B1

A1

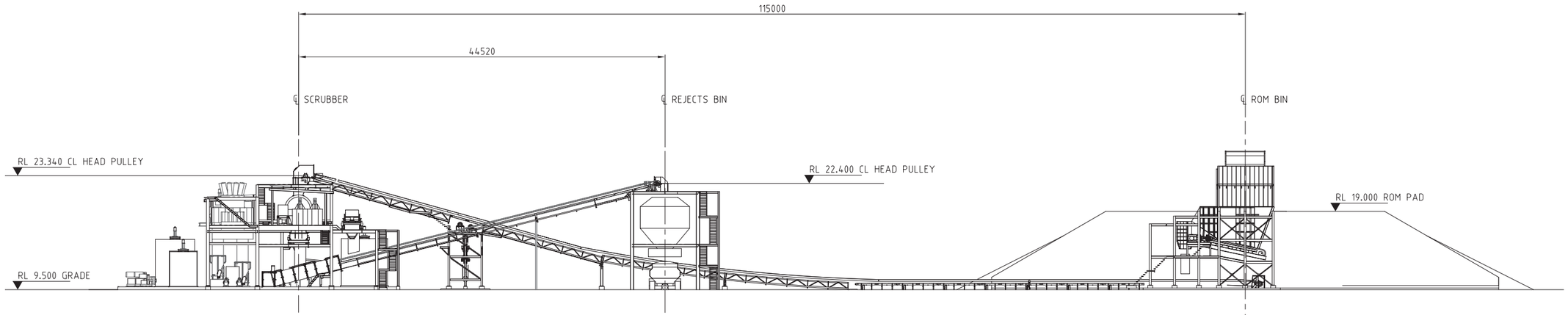

SECTION A G-002

5 0 5 10 15 20 25

SCALE 1:250

DRG No	REFERENCE DRAWINGS	REV	DATE	DESCRIPTION	DRN	CHK'D	DESIGN ENG.	LEAD ENG.	DESIGN APP'D	PROJ. APP'D	CLIENT APP'D
		B	05AUG15	ISSUED FOR STUDY	ANM				IM	DM	
000-G-002	PROCESS PLANT, GENERAL ARRANGEMENT, PLAN	A	06FEB15	ISSUED FOR CLIENT REVIEW	SH				IM	DM	

CLIENT GB MINERALS LTD.

PROJECT FARIM PHOSPHATE PROJECT

Lycopodium

Lycopodium Minerals Canada Ltd Corp. No: 767 852-5
5060 Spectrum Way, Suite 400, Mississauga, Ontario L4W 5N5
T: (905) 206 2600 www.lycopodium.com.au

KEMWorks

231 N Kentucky Ave Lakeland ı Florida ı USA
+1.863.682.5369 www.kemworks.com

GBMINERALS LTD

DRAWN	CHECKED	DESIGN ENG.	LEAD ENG.	DESIGN APP'D	PROJ. APP'D	CLIENT APP'D

DRAWING TITLE
PROCESS PLANT
GENERAL ARRANGEMENT
SECTIONS SHEET 1

SCALE	JOB No.	DRG No.	REV.
1:250	5036	101-G-007	B

DRAWN SH | DATE 18NOV14

T:\Drafting\Studies\5036 - Farim Phosphate Study\G\5036 101G007.dgn, 05-Aug-15 12:58:27 PM, stuart.hallam, ISO B1

A1

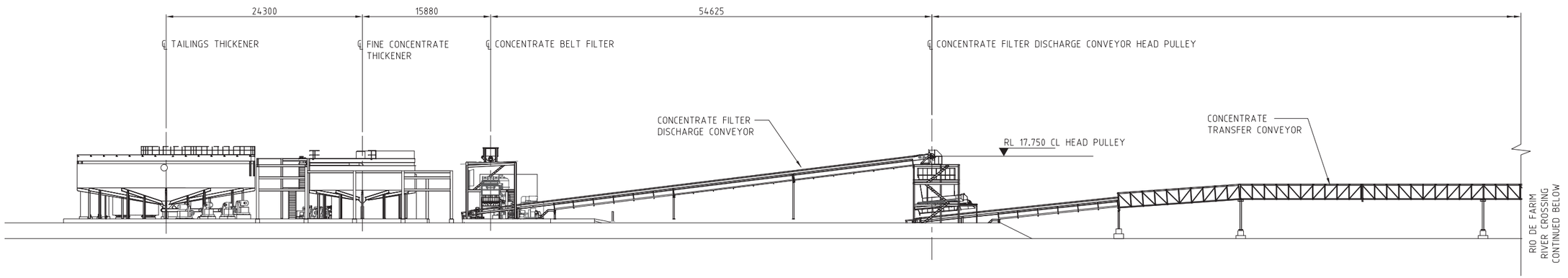

SECTION B G-002

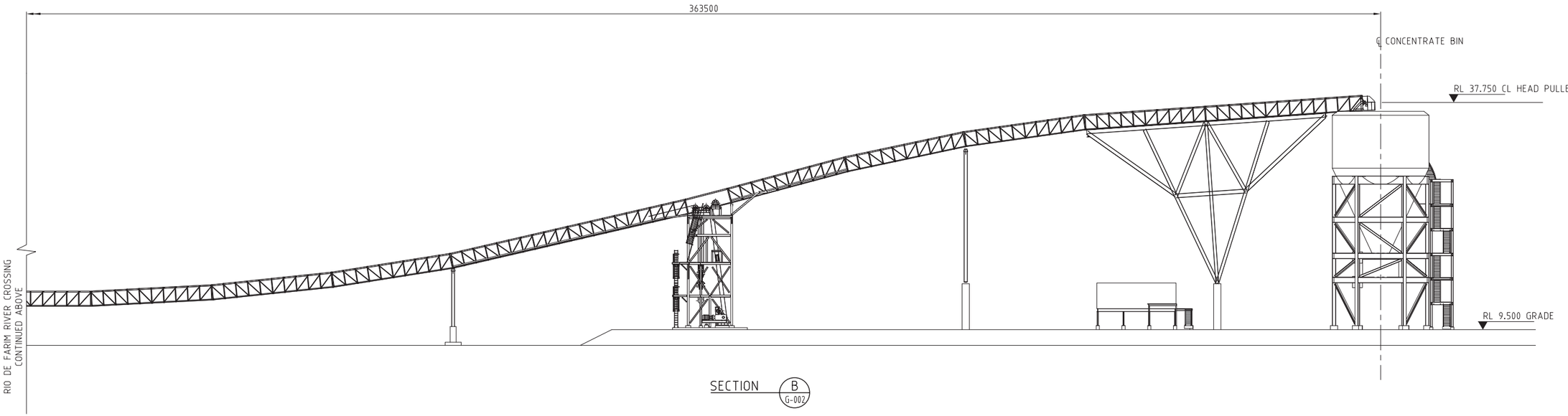

SECTION B G-002

5 0 5 10 15 20 25
SCALE 1:250

DRG No	REFERENCE DRAWINGS	REV	DATE	DESCRIPTION	DRN	CHK'D	DESIGN ENG.	LEAD ENG.	DESIGN APP'D	PROJ. APP'D	CLIENT APP'D
		B	05AUG15	ISSUED FOR STUDY	ANM				IN	DM	
101-G-002	PROCESS PLANT, GENERAL ARRANGEMENT, PLAN	A	06FEB15	ISSUED FOR CLIENT REVIEW	SH				IM	DM	

CLIENT GB MINERALS LTD.

PROJECT FARIM PHOSPHATE PROJECT

Lycopodium
Lycopodium Minerals Canada Ltd Corp. No: 767 852-5
5060 Spectrum Way, Suite 400, Mississauga, Ontario L4W 5N5
T: (905) 206 2600 www.lycopodium.com.au

KEMWorks
231 N Kentucky Ave Lakeland ı Florida ı USA
+1.863.682.5369 www.kemworks.com

GBMINERALS LTD

DRAWN	CHECKED	DESIGN ENG.	LEAD ENG.	DESIGN APP'D	PROJ. APP'D	CLIENT APP'D

DRAWING TITLE
PROCESS PLANT
GENERAL ARRANGEMENT
SECTIONS SHEET 2

SCALE	JOB No.	DRG No.	REV.
1:250	5036	101-G-008	B

DRAWN SH DATE 18NOV14

T:\Drafting\Studies\5036 - Farim Phosphate Study\G\5036 101G008.dgn, 05-Aug-15 12:51:29 PM, stuart.hallam, ISO B1

A1

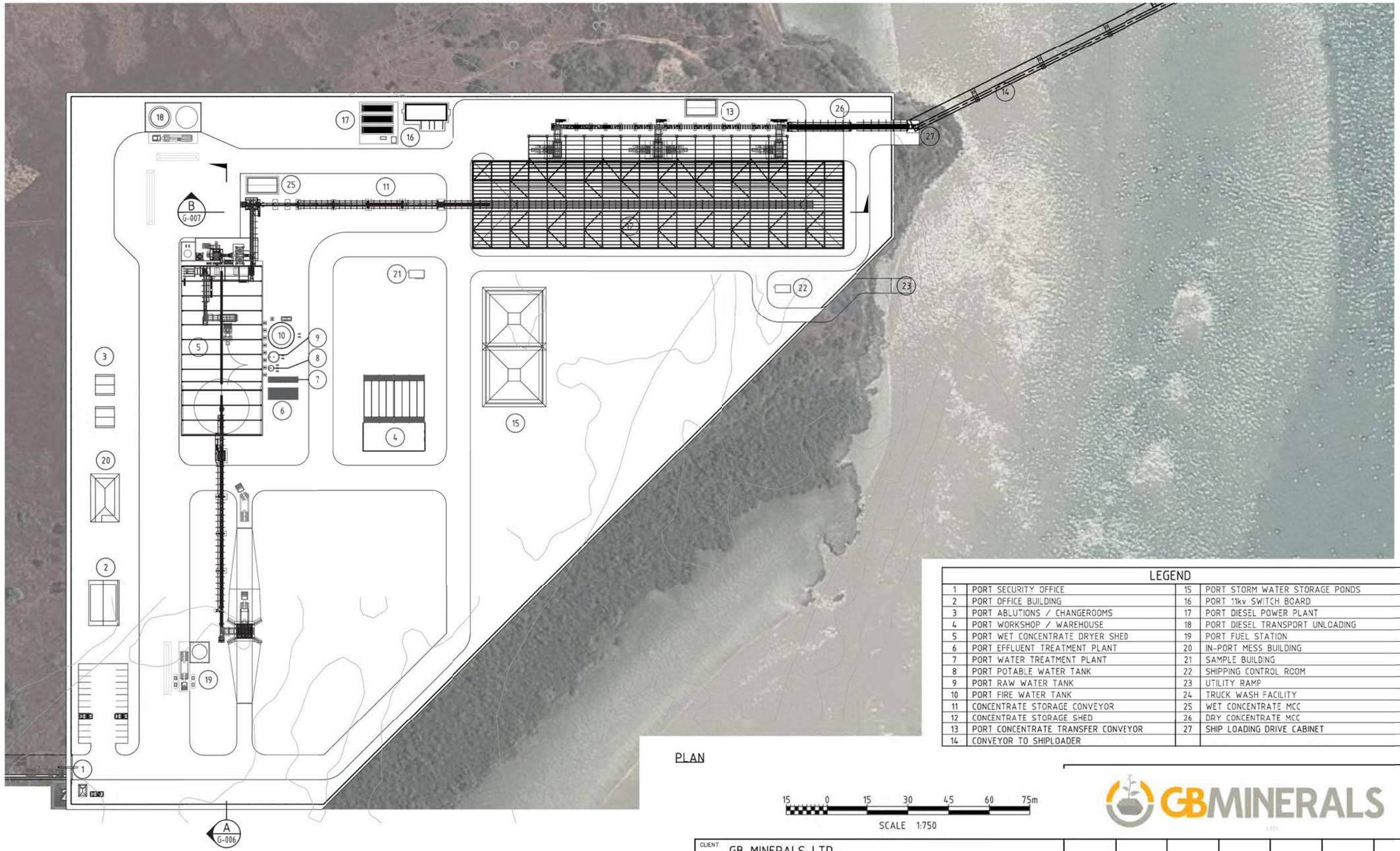

LEGEND			
1	PORT SECURITY OFFICE	15	PORT STORM WATER STORAGE PONDS
2	PORT OFFICE BUILDING	16	PORT 11kv SWITCH BOARD
3	PORT ABLUTIONS / CHANGEROOMS	17	PORT DIESEL POWER PLANT
4	PORT WORKSHOP / WAREHOUSE	18	PORT DIESEL TRANSPORT UNLOADING
5	PORT WET CONCENTRATE DRYER SHED	19	PORT FUEL STATION
6	PORT EFFLUENT TREATMENT PLANT	20	IN-PORT MESS BUILDING
7	PORT WATER TREATMENT PLANT	21	SAMPLE BUILDING
8	PORT POTABLE WATER TANK	22	SHIPPING CONTROL ROOM
9	PORT RAW WATER TANK	23	UTILITY RAMP
10	PORT FIRE WATER TANK	24	TRUCK WASH FACILITY
11	CONCENTRATE STORAGE CONVEYOR	25	WET CONCENTRATE MCC
12	CONCENTRATE STORAGE SHED	26	DRY CONCENTRATE MCC
13	PORT CONCENTRATE TRANSFER CONVEYOR	27	SHIP LOADING DRIVE CABINET
14	CONVEYOR TO SHIPLOADER		

PLAN

15 0 15 30 45 60 75m

SCALE 1:750

GB MINERALS LTD

DRG No	REFERENCE DRAWINGS	REV	DATE	DESCRIPTION	DRN	CHK'D	DESIGN ENG.	LEAD ENG.	DESIGN APP'D	PROJ. APP'D	CLIENT APP'D
		C	05AUG15	ISSUED FOR STUDY	ANM				IM	DM	
		B	06FEB14	ISSUED FOR CLIENT REVIEW	SdM				IM	DM	
		A	05DEC14	ISSUED FOR REVIEW	SdM				IM	DM	

CLIENT GB MINERALS LTD.

PROJECT FARIM PHOSPHATE PROJECT

Lycopodium

Lycopodium Minerals Canada Ltd Corp. No: 767 852-5
5060 Spectrum Way, Suite 400, Mississauga, Ontario L4W 5N5
T: (905) 206 2600 www.lycopodium.com.au

KEMWorks

231 N Kentucky Ave Lakeland | Florida | USA
+1.863.682.5369 www.kemworks.com

DRAWN	CHECKED	DESIGN ENG.	LEAD ENG.	DESIGN APP'D	PROJ. APP'D	CLIENT APP'D

DRAWING TITLE
PONTA CHUGUE PORT FACILITY
GENERAL ARRANGEMENT
PLAN

SCALE	JOB No.	DRG No.	REV.
1 : 750	5036	700-G-001	C

DRAWN SdM DATE 10NOV14

T:\Drafting\Studies\5036 - Farim Phosphate Study\G\5036 700G001.dgn, 14-Aug-15 12:03:46 PM, stuarthallam, ISO B1

A1

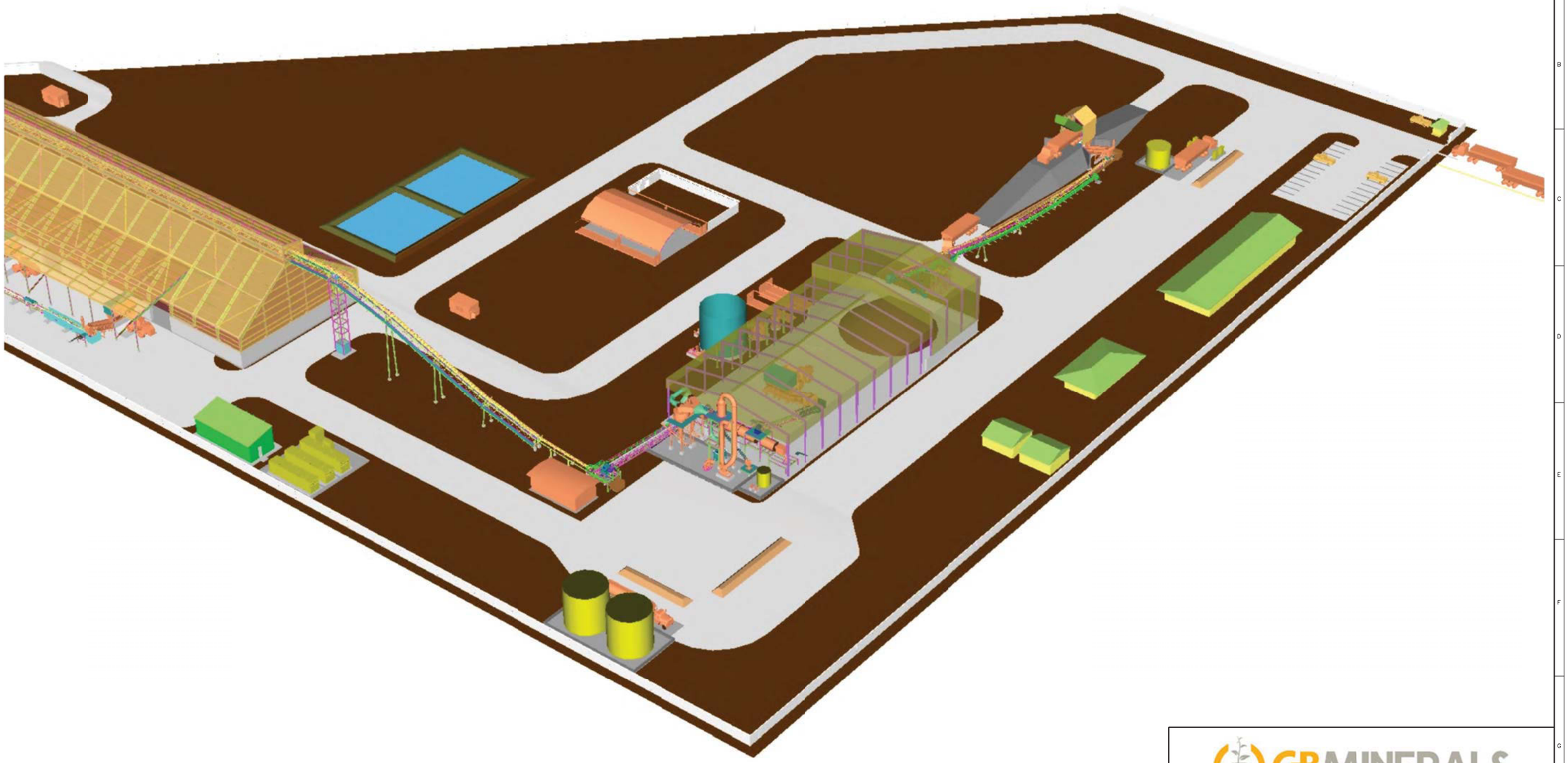

DRG No	REFERENCE DRAWINGS	REV	DATE	DESCRIPTION	DRN	CHK'D	DESIGN ENG.	LEAD ENG.	DESIGN APP'D	PROJ. APP'D	CLIENT APP'D
		B	05AUG15	ISSUED FOR STUDY	ANM				IM	DM	
		A	06FEB15	ISSUED FOR CLIENT REVIEW	SdM				IM	DM	

CLIENT GB MINERALS LTD.

PROJECT FARIM PHOSPHATE PROJECT

Lycopodium

Lycopodium Minerals Canada Ltd Corp. No: 767 852-5
5060 Spectrum Way, Suite 400, Mississauga, Ontario L4W 5N5
T: (905) 206 2600 www.lycopodium.com.au

KEMWorks
231 N Kentucky Ave Lakeland ı Florida ı USA
+1.863.682.5369 www.kemworks.com

GBMINERALS LTD

DRAWN	CHECKED	DESIGN ENG.	LEAD ENG.	DESIGN APP'D	PROJ. APP'D	CLIENT APP'D

DRAWING TITLE
PONTA CHUGUE
PORT FACILITY
PICTORIAL VIEW 1

SCALE	JOB No.	DRG No.	REV.
NTS	5036	700-G-003	B

DRAWN	DATE
SdM	10NOV14

DRG No	REFERENCE DRAWINGS	REV	DATE	DESCRIPTION	DRN	CHK'D	DESIGN ENG.	LEAD ENG.	DESIGN APP'D	PROJ. APP'D	CLIENT APP'D
		B	05AUG15	ISSUED FOR STUDY	ANM				IM	DM	
		A	06FEB15	ISSUED FOR CLIENT REVIEW	SdM				IM	DM	

CLIENT GB MINERALS LTD.

PROJECT FARIM PHOSPHATE PROJECT

Lycopodium

Lycopodium Minerals Canada Ltd Corp. No: 767 852-5
5060 Spectrum Way, Suite 400, Mississauga, Ontario L4W 5N5
T: (905) 206 2600 www.lycopodium.com.au

KEMWorks

231 N Kentucky Ave Lakeland | Florida | USA
+1.863.682.5369 www.kemworks.com

GBMINERALS LTD

DRAWN	CHECKED	DESIGN ENG.	LEAD ENG.	DESIGN APP'D	PROJ. APP'D	CLIENT APP'D

DRAWING TITLE
PONTA CHUGUE
PORT FACILITY
PICTORIAL VIEW 2

SCALE		JOB No.	DRG No.	REV.
NTS		5036	700-G-004	B
DRAWN SdM	DATE 10NOV14			

T:\Drafting\Studies\5036 - Farim Phosphate Study\G\5036 700G004.dgn, 05-Aug-15 1:54:33 PM, stuart.hallam, ISO B1

A1

DRG No	REFERENCE DRAWINGS	REV	DATE	DESCRIPTION	DRN	CHK'D	DESIGN ENG.	LEAD ENG.	DESIGN APP'D	PROJ. APP'D	CLIENT APP'D
		C	05AUG15	ISSUED FOR STUDY	ANM				IM	DM	
		B	06FEB15	ISSUED FOR CLIENT REVIEW	SdM				IM	DM	
		A	05DEC14	ISSUED FOR REVIEW	SdM				IM	DM	

CLIENT GB MINERALS LTD.

PROJECT FARIM PHOSPHATE PROJECT

Lycopodium

Lycopodium Minerals Canada Ltd Corp. No: 767 852-5
5060 Spectrum Way, Suite 400, Mississauga, Ontario L4W 5N5
T: (905) 206 2600 www.lycopodium.com.au

KEMWorks

231 N Kentucky Ave Lakeland | Florida | USA
+1.863.682.5369 www.kemworks.com

GBMINERALS LTD

DRAWN	CHECKED	DESIGN ENG.	LEAD ENG.	DESIGN APP'D	PROJ. APP'D	CLIENT APP'D

DRAWING TITLE
PONTA CHUGUE
PORT FACILITY
ISOMETRIC VIEW

SCALE	JOB No.	DRG No.	REV.
N.T.S.	5036	700-G-005	C

DRAWN SdM DATE 10NOV14

T:\Drafting\Studies\5036 - Farim Phosphate Study\G\5036 700G005.dgn, 05-Aug-15 1:58:26 PM, stuarthallen, ISO B1

A1

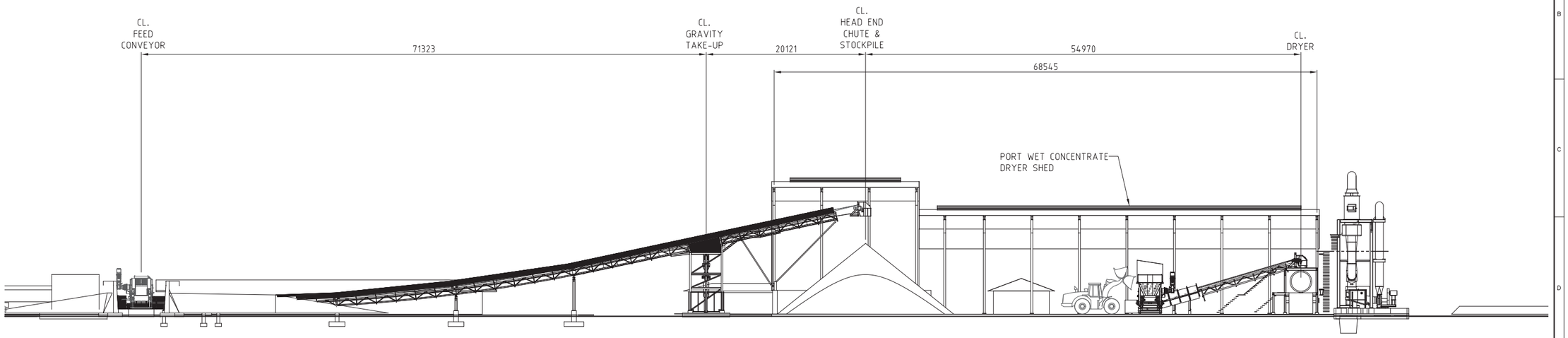

SECTION A G-002

5 0 5 10 15 20 25

SCALE 1:250

DRG No	REFERENCE DRAWINGS	REV	DATE	DESCRIPTION	DRN	CHK'D	DESIGN ENG.	LEAD ENG.	DESIGN APP'D	PROJ. APP'D	CLIENT APP'D
		B	05AUG15	ISSUED FOR STUDY	ANM				IM	DM	
700-G-001	PONTA CHUCUE PORT FACILITY, GENERAL ARRANGEMENT, PLAN	A	06FEB15	ISSUED FOR CLENT REVIEW	SdM				IM	DM	

CLIENT GB MINERALS LTD.

PROJECT FARIM PHOSPHATE PROJECT

Lycopodium

Lycopodium Minerals Canada Ltd Corp. No: 767 852-5
5060 Spectrum Way, Suite 400, Mississauga, Ontario L4W 5N5
T: (905) 206 2600 www.lycopodium.com.au

KEMWorks

231 N Kentucky Ave Lakeland ı Florida ı USA
+1.863.682.5369 www.kemworks.com

GBMINERALS LTD

DRAWN	CHECKED	DESIGN ENG.	LEAD ENG.	DESIGN APP'D	PROJ. APP'D	CLIENT APP'D

DRAWING TITLE
PONTA CHUGUE PORT FACILITY
GENERAL ARRANGEMENT
SECTIONS SHEET 1

SCALE	JOB No.	DRG No.	REV.
1:250	5036	700-G-006	B

DRAWN SH DATE 18NOV14

T:\Drafting\Studies\5036 - Farim Phosphate Study\G\5036 700G006.dgn, 05-Aug-15 2:01:47 PM, stuart.hallam, ISO B1

A1

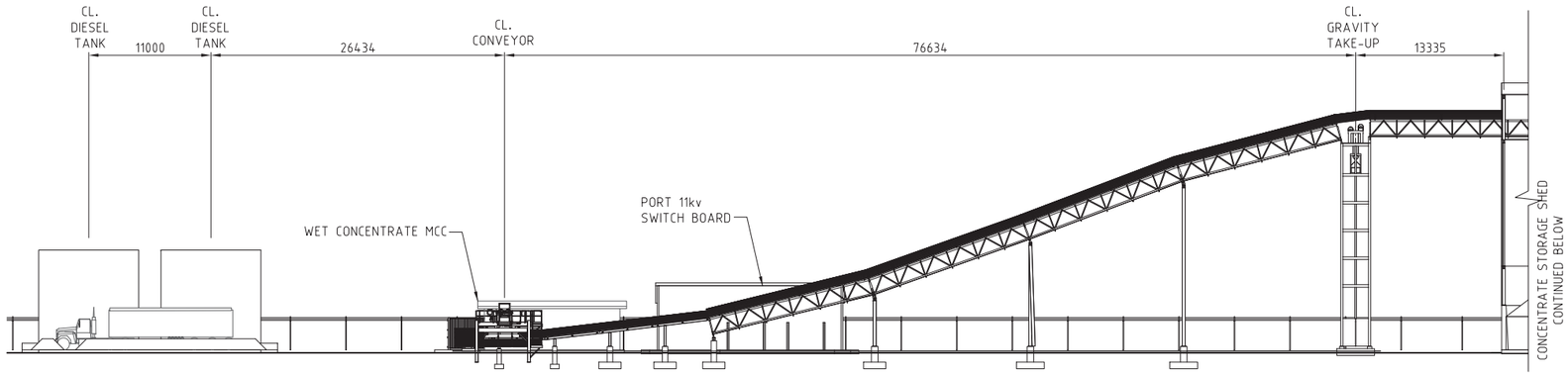

SECTION B G-001

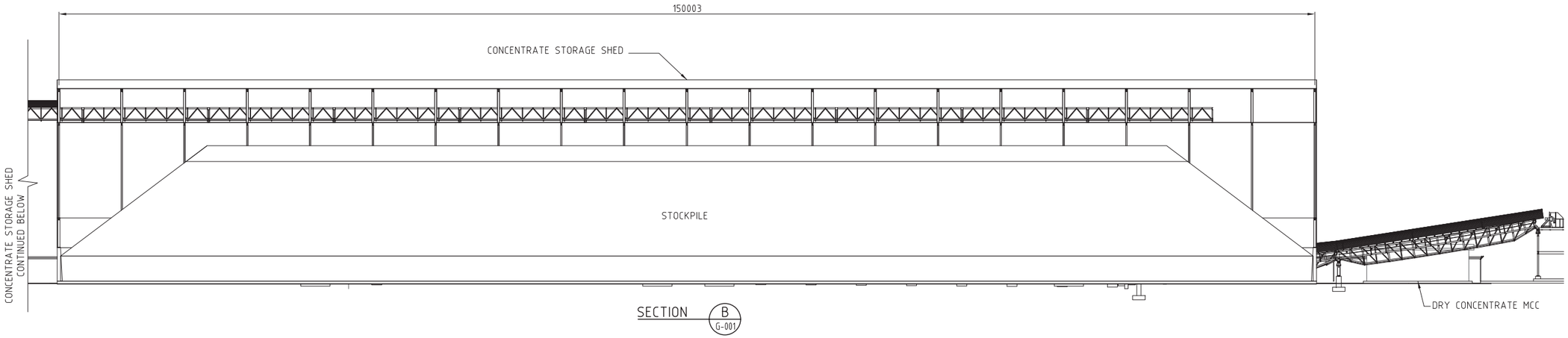

SECTION B G-001

5 0 5 10 15 20 25

SCALE 1:250

DRG No	REFERENCE DRAWINGS	REV	DATE	DESCRIPTION	DRN	CHK'D	DESIGN ENG.	LEAD ENG.	DESIGN APP'D	PROJ. APP'D	CLIENT APP'D
		B	05AUG15	ISSUED FOR STUDY	ANM				IM	DM	
700-G-001	PONTA CHUCUE PORT FACILITY, GENERAL ARRANGEMENT, PLAN	A	06FEB15	ISSUED FOR CLENT REVIEW	SdM				IM	DM	

CLIENT GB MINERALS LTD.

PROJECT FARIM PHOSPHATE PROJECT

Lycopodium

Lycopodium Minerals Canada Ltd Corp. No: 767 852-5
5060 Spectrum Way, Suite 400, Mississauga, Ontario L4W 5N5
T: (905) 206 2600 www.lycopodium.com.au

KEMWorks

231 N Kentucky Ave Lakeland ı Florida ı USA
+1.863.682.5369 www.kemworks.com

GBMINERALS LTD

DRAWN	CHECKED	DESIGN ENG.	LEAD ENG.	DESIGN APP'D	PROJ. APP'D	CLIENT APP'D

DRAWING TITLE
PONTA CHUCUE PORT FACILITY
GENERAL ARRANGEMENT
SECTIONS SHEET 2

SCALE	JOB No.	DRG No.	REV.
1:250	5036	700-G-007	B

DRAWN SH | DATE 18NOV14

T:\Drafting\Studies\5036 - Farim Phosphate Study\G\5036 700G007.dgn, 05-Aug-15 2:02:52 PM, stuart.hallam, ISO B1

A1

APPENDIX 1-B2

MINING AND PIT BACKFILLING METHOD

(1 Page)

MINING ADVANCE

100m min.

Pump Install

Check Valve

Surface drainage ditch
move - keep 120m ahead of cut

Typical
0.6m dia.
Deep well

Same at opposite end

Original Topography

+35m

Normal Pit length 1000 metres

sump 8" dia.
Diesel pump
install every 300m

-1.0%

Excavator / Truck

+25m

65° Dig Face Angle

+15m

sump 8" dia.
Diesel pump

+5m

FPA Top
Backhoe

0m
FPA Bottom

Backhoe

Pit Toe

50m

Dump Toe

Haul road

+5m

20m

Previous well

+10m

20° Dump Face Angle

12" pipeline

To slurry and plant irregation domestic water

To Original Topography

Previous wells (plugged)

0 50 100 150 200
METRES

Active Well

Previous Well (plugged)

Mine within area of depression
pump spacing to be determined

Diesel pit pumps - barge mounted with
winch and boom to support suction (flexible 12" hose)
winch and boom to connect outlet (flexible 8" hose)

CLIENT: Lycopodium Minerals Canada, Ltd.

PROJECT: FARIM PHOSPHATE DEPOSIT
2015 DEFINITIVE FEASIBILITY STUDY

TITLE: EXCAVATOR/TRUCK
MINING METHODOLOGY - PLAN VIEW

CONSULTANT: Golder Associates

YYYY-MM-DD	2015-05-28
PREPARED	WJS
DESIGN	WJS
REVIEW	JW
APPROVED	TM

PROJECT NO. 1522131 | CONTROL 0002 | Rev - | FIGURE 16.3

PATH: P:\Lycopodium Farim 1522131\Drafting\AutoCAD\mptruck shovel methodology plan 11X17.dwg

IF THIS MEASUREMENT DOES NOT MATCH WHAT IS SHOWN, THE SHEET SIZE HAS BEEN MODIFIED FROM ANSI C

APPENDIX 1-B3

MINE PLAN DRAWINGS AT KEY YEARS

(13 Pages)

Path: — | File Name: ENG_B_ANSI_B_LAND_STACK_2xROWS_TEXT_IMP.ps

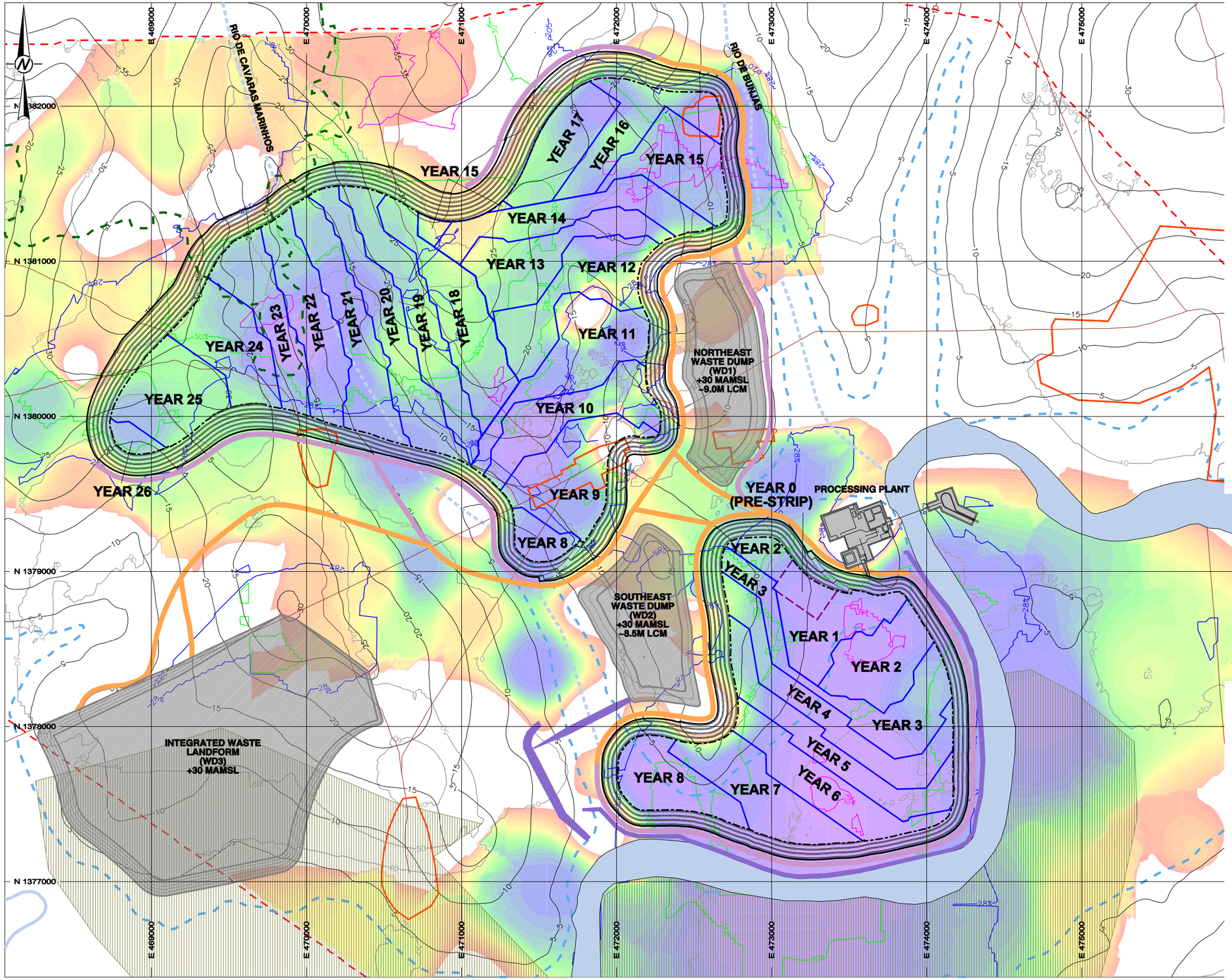

LEGEND

- MAJOR TOPOGRAPHY CONTOUR (5 M)
- MAJOR OVERBURDEN THICKNESS CONTOUR (10 M)
- RIVER
- FLOOD EXTENT - 1 IN 100 YEAR EVENT
- EPHEMERAL STREAM
- HIGH AND MODERATE ECOLOGICAL INTEGRITY BOUNDARY
- EXISTING ROAD
- 25 YEAR PIT CREST
- 25 YEAR PIT TOE
- WETLANDS
- EXISTING TOWNSHIP
- MODELED FPA EXTENTS
- MINE WASTE DUMP (WD) FOOTPRINT
- EOY WASTE/MATRIX HAUL ROAD
- EOY MATRIX HAUL ROAD
- PERMANENT PROTECTION BUND
- 32% ROM P2O5, DRY BASIS
- 30% ROM P2O5, DRY BASIS
- 28% ROM P2O5, DRY BASIS

ROM STRIP RATIO (BCM / ROM TONNE), DRY BASIS

5 6 7 8 9 10 11 12 13 14 15 16 17 18 19 20

NOTE:
ROM STRIP RATIO GREATER THAN 20 BCM/ROM TONNE IS NOT SHOWN

250 125 0 250 Metres 500 750 1000

SCALE 1:25,000

CLIENT
LYCOPODIUM MINERALS CANADA, LTD.

PROJECT
FARIM PHOSPHATE DEPOSIT
2015 DEFINITIVE FEASIBILITY STUDY

TITLE
GENERAL ARRANGEMENT OF THE 25-YEAR MINE PLAN PIT YEARLY MATRIX EXTRACTION

CONSULTANT
Golder Associates

YYYY-MM-DD	2015-06-22
PREPARED	JJW
DESIGN	JJW
REVIEW	EHM
APPROVED	EHM

PROJECT No.	CONTROL	Rev.	FIGURE
152-2131	0002	-	16.24

IF THIS MEASUREMENT DOES NOT MATCH WHAT IS SHOWN, THE SHEET SIZE HAS BEEN MODIFIED FROM: ANSI B

Path: — | File Name: ENG_B_ANSI_B_LAND_STACK_2xROWS_TEXT_IMP.ps

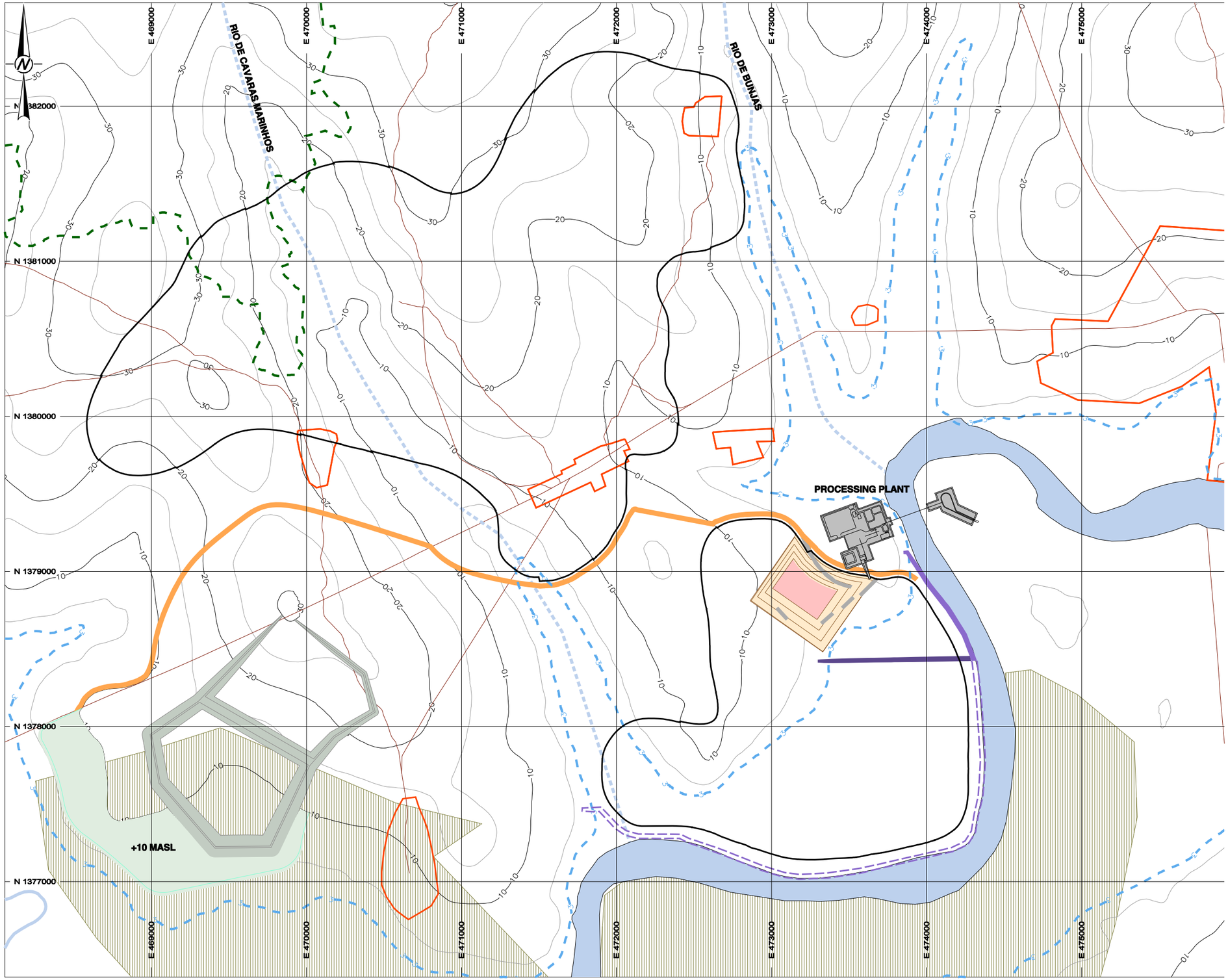

LEGEND

BASE DATA

- MAJOR TOPOGRAPHY CONTOUR (10 M)
- MINOR TOPOGRAPHY CONTOUR (5 M)
- RIVER
- FLOOD EXTENT - 1 IN 100 YEAR EVENT
- EPHEMERAL STREAM
- PERMANENT RIVER CACHEU PROTECTION BUND
- TEMPORARY RIVER CACHEU PROTECTION BUND
- HIGH AND MODERATE ECOLOGICAL INTEGRITY BOUNDARY
- EXISTING ROAD
- 25-YEAR PIT CREST
- WETLANDS
- EXISTING TOWNSHIP

END-OF-YEAR (EOY) FEATURES

- EOY PIT CREST (10 M)
- EOY IN-PIT OVERBURDEN BACKFILL (IOB) CREST (5 M)
- EOY OVERBURDEN STORAGE FACILITY (OSF) CREST (5 M)
- EOY SURCHARGE OVERBURDEN STORAGE (SOS) CREST (5 M)
- EOY OVERBURDEN PRESTRIP ADVANCE
- EOY EXPOSED FPA
- EOY PIT FLOOR
- EOY IN-PIT OVERBURDEN BACKFILL (IOB)
- EOY OVERBURDEN STORAGE FACILITY (OSF)
- EOY SURCHARGE OVERBURDEN STORAGE (SOS)
- EOY ACCESS RAMPS
- EOY WASTE/MATRIX HAUL ROAD
- EOY MATRIX HAUL ROAD
- RECLAMATION AREA
- PREVIOUSLY RECLAIMED AREA

250 125 0 250 Metres 500 750 1000

SCALE 1:25,000

CLIENT
LYCOPODIUM MINERALS CANADA, LTD.

PROJECT
FARIM PHOSPHATE DEPOSIT
2015 DEFINITIVE FEASIBILITY STUDY

TITLE
MINE STATUS MAP
END-OF-YEAR 0

CONSULTANT
Golder Associates

YYYY-MM-DD	2015-06-23
PREPARED	JJW
DESIGN	JJW
REVIEW	
APPROVED	

PROJECT No.	CONTROL	Rev.	FIGURE
152-2131	0002	-	16.27

IF THIS MEASUREMENT DOES NOT MATCH WHAT IS SHOWN, THE SHEET SIZE HAS BEEN MODIFIED FROM: ANSI B

1 in
0

Path: — | File Name: ENG_B_ANSI_B_LAND_STACK_2xROWS_TEXT_IMP.ps

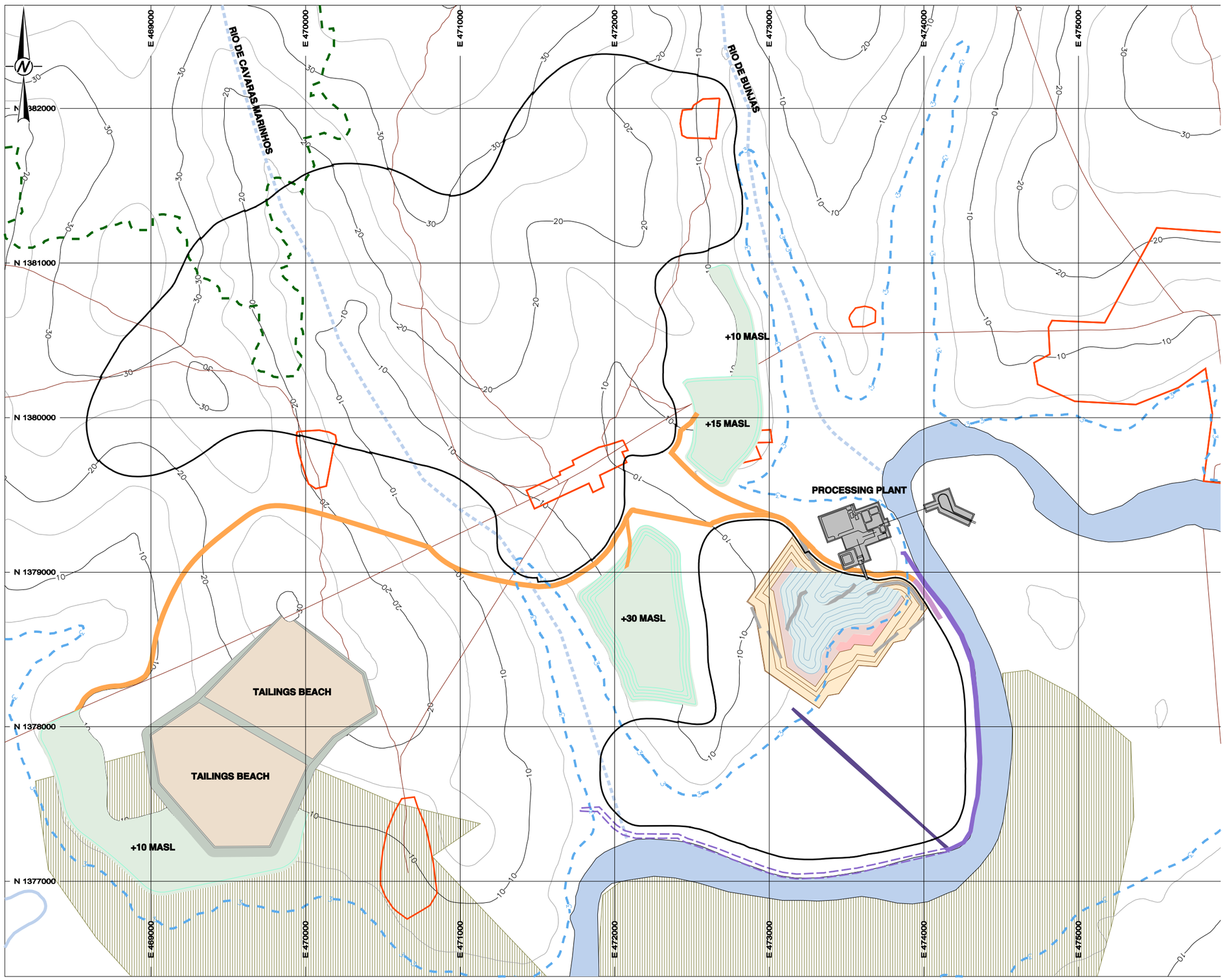

LEGEND

BASE DATA

- MAJOR TOPOGRAPHY CONTOUR (10 M)
- MINOR TOPOGRAPHY CONTOUR (5 M)
- RIVER
- FLOOD EXTENT - 1 IN 100 YEAR EVENT
- EPHEMERAL STREAM
- PERMANENT RIVER CACHEU PROTECTION BUND
- TEMPORARY RIVER CACHEU PROTECTION BUND
- HIGH AND MODERATE ECOLOGICAL INTEGRITY BOUNDARY
- EXISTING ROAD
- 25-YEAR PIT CREST
- WETLANDS
- EXISTING TOWNSHIP

END-OF-YEAR (EOY) FEATURES

- EOY PIT CREST (10 M)
- EOY IN-PIT OVERBURDEN BACKFILL (IOB) CREST (5 M)
- EOY OVERBURDEN STORAGE FACILITY (OSF) CREST (5 M)
- EOY SURCHARGE OVERBURDEN STORAGE (SOS) CREST (5 M)
- EOY OVERBURDEN PRESTRIP ADVANCE
- EOY EXPOSED FPA
- EOY PIT FLOOR
- EOY IN-PIT OVERBURDEN BACKFILL (IOB)
- EOY OVERBURDEN STORAGE FACILITY (OSF)
- EOY SURCHARGE OVERBURDEN STORAGE (SOS)
- EOY ACCESS RAMPS
- EOY WASTE/MATRIX HAUL ROAD
- EOY MATRIX HAUL ROAD
- RECLAMATION AREA
- PREVIOUSLY RECLAIMED AREA

250 125 0 250 Metres 500 750 1000

SCALE 1:25,000

IF THIS MEASUREMENT DOES NOT MATCH WHAT IS SHOWN, THE SHEET SIZE HAS BEEN MODIFIED FROM: ANSI B

CLIENT
LYCOPODIUM MINERALS CANADA, LTD.

PROJECT
FARIM PHOSPHATE DEPOSIT
2015 DEFINITIVE FEASIBILITY STUDY

TITLE
MINE STATUS MAP
END-OF-YEAR 1

CONSULTANT
Golder Associates

YYYY-MM-DD	2015-06-23
PREPARED	JJW
DESIGN	JJW
REVIEW	
APPROVED	

PROJECT No.	CONTROL	Rev.	FIGURE
152-2131	0002	-	16.28

Path: — | File Name: ENG_B_ANSI_B_LAND_STACK_2xROWS_TEXT_IMP.ps

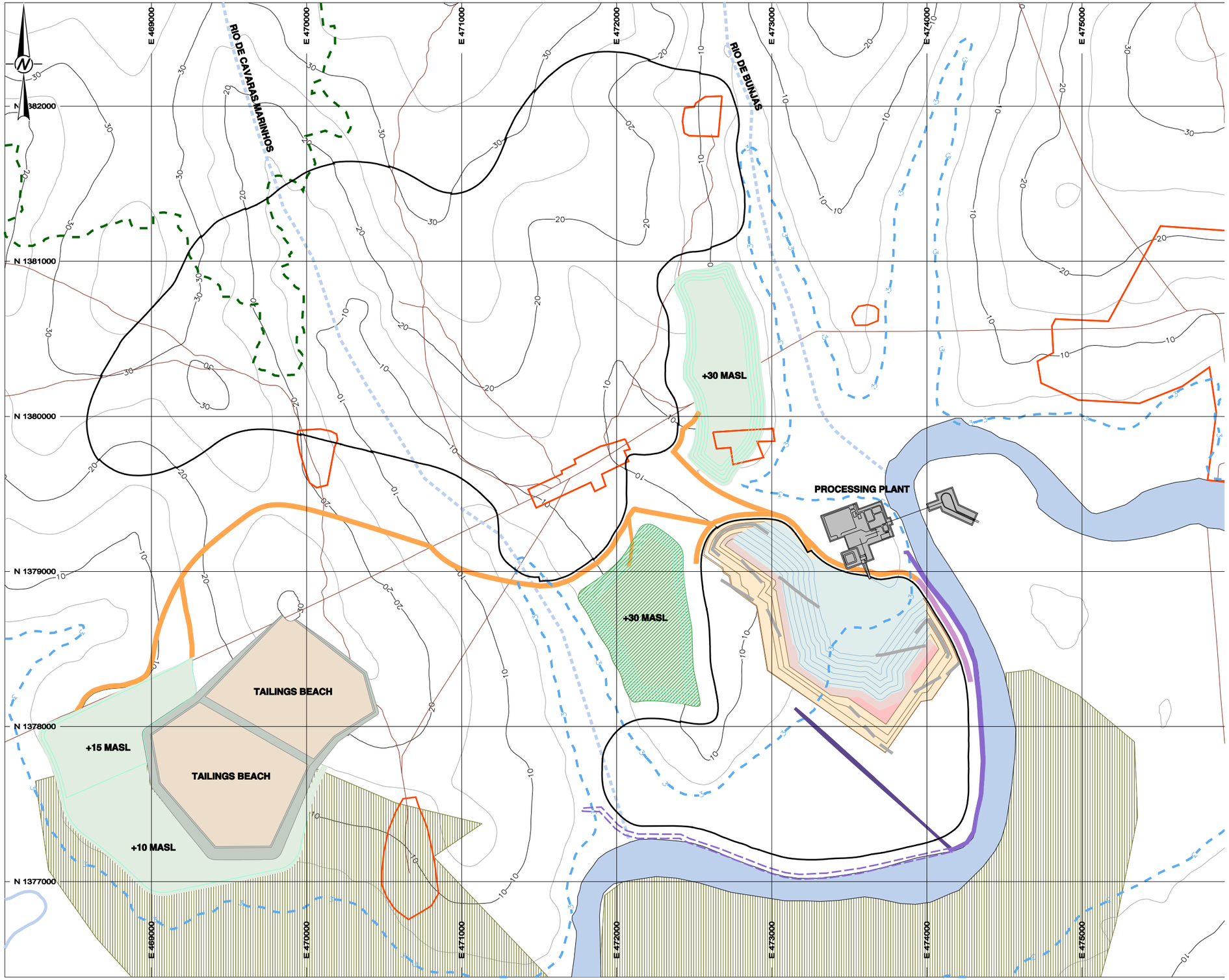

LEGEND

BASE DATA

- MAJOR TOPOGRAPHY CONTOUR (10 M)
- MINOR TOPOGRAPHY CONTOUR (5 M)
- RIVER
- FLOOD EXTENT - 1 IN 100 YEAR EVENT
- EPHEMERAL STREAM
- PERMANENT RIVER CACHEU PROTECTION BUND
- TEMPORARY RIVER CACHEU PROTECTION BUND
- HIGH AND MODERATE ECOLOGICAL INTEGRITY BOUNDARY
- EXISTING ROAD
- 25-YEAR PIT CREST
- WETLANDS
- EXISTING TOWNSHIP

END-OF-YEAR (EOY) FEATURES

- EOY PIT CREST (10 M)
- EOY IN-PIT OVERBURDEN BACKFILL (IOB) CREST (5 M)
- EOY OVERBURDEN STORAGE FACILITY (OSF) CREST (5 M)
- EOY SURCHARGE OVERBURDEN STORAGE (SOS) CREST (5 M)
- EOY OVERBURDEN PRESTRIP ADVANCE
- EOY EXPOSED FPA
- EOY PIT FLOOR
- EOY IN-PIT OVERBURDEN BACKFILL (IOB)
- EOY OVERBURDEN STORAGE FACILITY (OSF)
- EOY SURCHARGE OVERBURDEN STORAGE (SOS)
- EOY ACCESS RAMPS
- EOY WASTE/MATRIX HAUL ROAD
- EOY MATRIX HAUL ROAD
- RECLAMATION AREA
- PREVIOUSLY RECLAIMED AREA

250 125 0 250 Metres 500 750 1000

SCALE 1:25,000

CLIENT
LYCOPODIUM MINERALS CANADA, LTD.

PROJECT
FARIM PHOSPHATE DEPOSIT
2015 DEFINITIVE FEASIBILITY STUDY

TITLE
MINE STATUS MAP
END-OF-YEAR 2

CONSULTANT
Golder Associates

YYYY-MM-DD	2015-06-23
PREPARED	JJW
DESIGN	JJW
REVIEW	
APPROVED	

PROJECT No.	CONTROL	Rev.	FIGURE
152-2131	0002	-	16.29

IF THIS MEASUREMENT DOES NOT MATCH WHAT IS SHOWN, THE SHEET SIZE HAS BEEN MODIFIED FROM: ANSI B

1 in

0

Path: — | File Name: ENG_B_ANSI_B_LAND_STACK_2xROWS_TEXT_IMP.ps

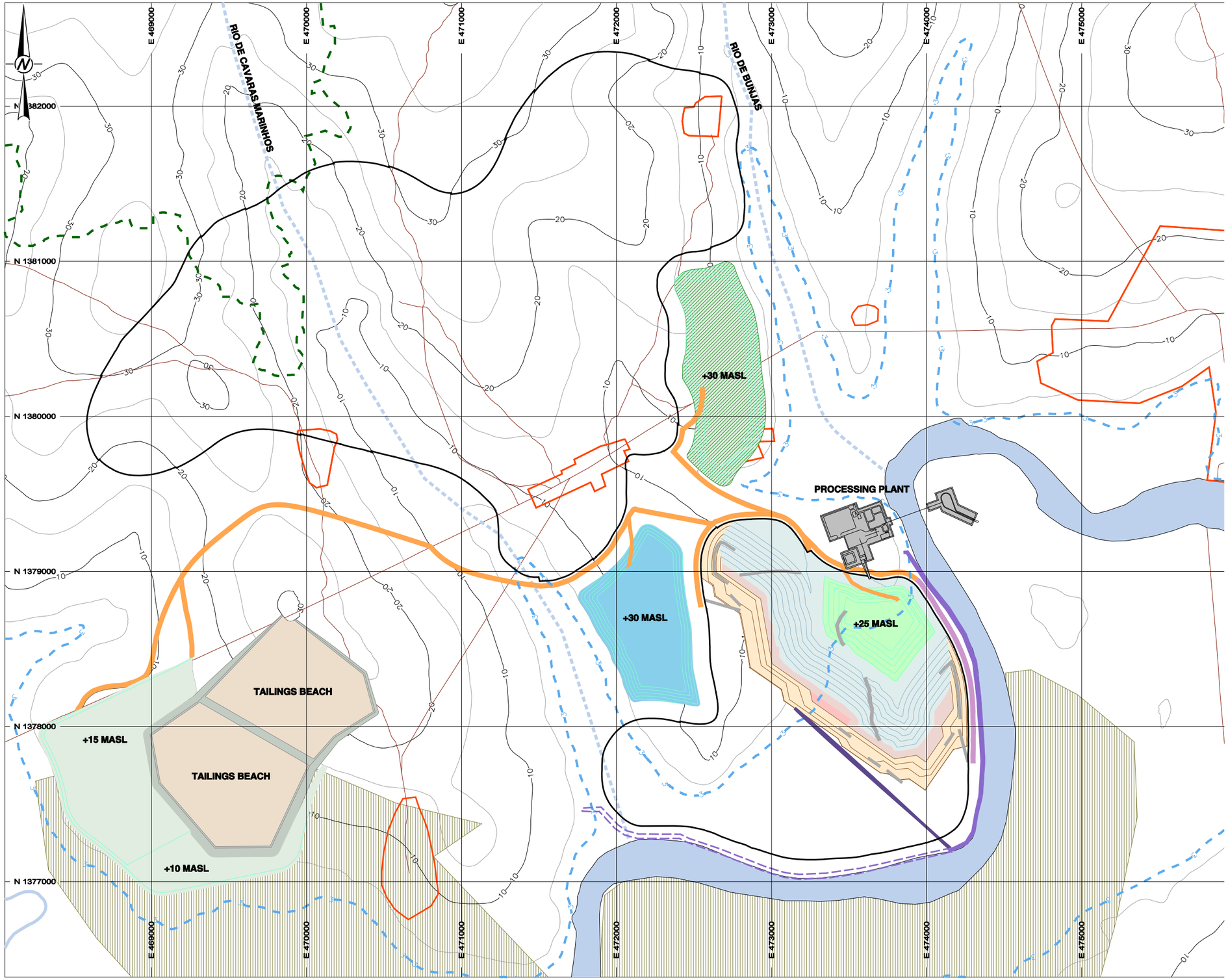

LEGEND

BASE DATA

- MAJOR TOPOGRAPHY CONTOUR (10 M)
- MINOR TOPOGRAPHY CONTOUR (5 M)
- RIVER
- FLOOD EXTENT - 1 IN 100 YEAR EVENT
- EPHEMERAL STREAM
- PERMANENT RIVER CACHEU PROTECTION BUND
- TEMPORARY RIVER CACHEU PROTECTION BUND
- HIGH AND MODERATE ECOLOGICAL INTEGRITY BOUNDARY
- EXISTING ROAD
- 25-YEAR PIT CREST
- WETLANDS
- EXISTING TOWNSHIP

END-OF-YEAR (EOY) FEATURES

- EOY PIT CREST (10 M)
- EOY IN-PIT OVERBURDEN BACKFILL (IOB) CREST (5 M)
- EOY OVERBURDEN STORAGE FACILITY (OSF) CREST (5 M)
- EOY SURCHARGE OVERBURDEN STORAGE (SOS) CREST (5 M)
- EOY OVERBURDEN PRESTRIP ADVANCE
- EOY EXPOSED FPA
- EOY PIT FLOOR
- EOY IN-PIT OVERBURDEN BACKFILL (IOB)
- EOY OVERBURDEN STORAGE FACILITY (OSF)
- EOY SURCHARGE OVERBURDEN STORAGE (SOS)
- EOY ACCESS RAMPS
- EOY WASTE/MATRIX HAUL ROAD
- EOY MATRIX HAUL ROAD
- RECLAMATION AREA
- PREVIOUSLY RECLAIMED AREA

250 125 0 250 Metres 500 750 1000

SCALE 1:25,000

CLIENT
LYCOPODIUM MINERALS CANADA, LTD.

PROJECT
FARIM PHOSPHATE DEPOSIT
2015 DEFINITIVE FEASIBILITY STUDY

TITLE
MINE STATUS MAP
END-OF-YEAR 3

CONSULTANT
Golder Associates

YYYY-MM-DD	2015-06-23
PREPARED	JJW
DESIGN	JJW
REVIEW	
APPROVED	

PROJECT No.	CONTROL	Rev.	FIGURE
152-2131	0002	-	16.30

IF THIS MEASUREMENT DOES NOT MATCH WHAT IS SHOWN, THE SHEET SIZE HAS BEEN MODIFIED FROM: ANSI B

0 1 in

Path: — | File Name: ENG_B_ANSI_B_LAND_STACK_2xROWS_TEXT_IMP.ps

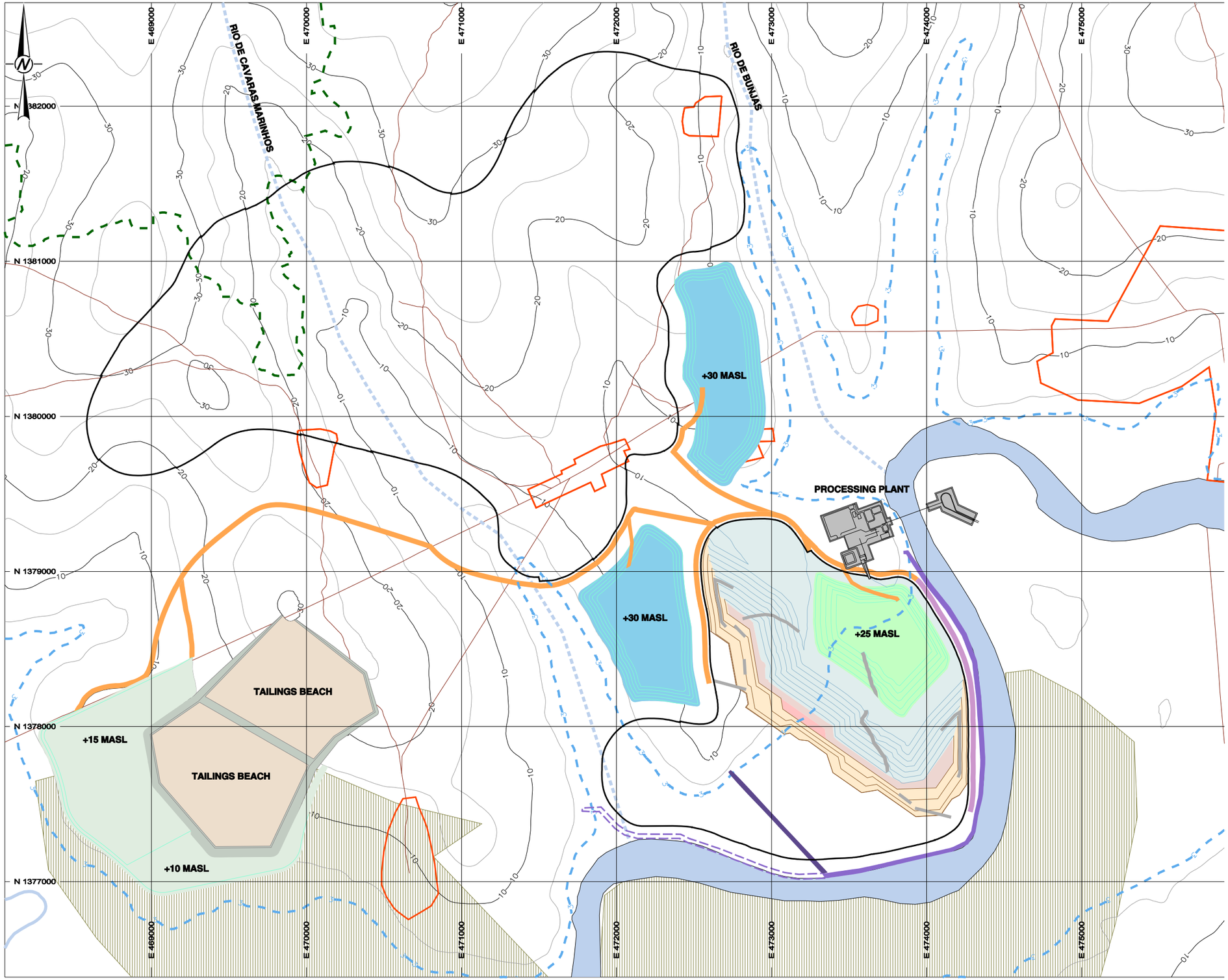

LEGEND

BASE DATA

- MAJOR TOPOGRAPHY CONTOUR (10 M)
- MINOR TOPOGRAPHY CONTOUR (5 M)
- RIVER
- FLOOD EXTENT - 1 IN 100 YEAR EVENT
- EPHEMERAL STREAM
- PERMANENT RIVER CACHEU PROTECTION BUND
- TEMPORARY RIVER CACHEU PROTECTION BUND
- HIGH AND MODERATE ECOLOGICAL INTEGRITY BOUNDARY
- EXISTING ROAD
- 25-YEAR PIT CREST
- WETLANDS
- EXISTING TOWNSHIP

END-OF-YEAR (EOY) FEATURES

- EOY PIT CREST (10 M)
- EOY IN-PIT OVERBURDEN BACKFILL (IOB) CREST (5 M)
- EOY OVERBURDEN STORAGE FACILITY (OSF) CREST (5 M)
- EOY SURCHARGE OVERBURDEN STORAGE (SOS) CREST (5 M)
- EOY OVERBURDEN PRESTRIP ADVANCE
- EOY EXPOSED FPA
- EOY PIT FLOOR
- EOY IN-PIT OVERBURDEN BACKFILL (IOB)
- EOY OVERBURDEN STORAGE FACILITY (OSF)
- EOY SURCHARGE OVERBURDEN STORAGE (SOS)
- EOY ACCESS RAMPS
- EOY WASTE/MATRIX HAUL ROAD
- EOY MATRIX HAUL ROAD
- RECLAMATION AREA
- PREVIOUSLY RECLAIMED AREA

250 125 0 250 Metres 500 750 1000

SCALE 1:25,000

CLIENT
LYCOPODIUM MINERALS CANADA, LTD.

PROJECT
FARIM PHOSPHATE DEPOSIT
2015 DEFINITIVE FEASIBILITY STUDY

TITLE
MINE STATUS MAP
END-OF-YEAR 4

CONSULTANT
Golder Associates

YYYY-MM-DD	2015-06-23
PREPARED	JJW
DESIGN	JJW
REVIEW	
APPROVED	

PROJECT No.	CONTROL	Rev.	FIGURE
152-2131	0002	-	16.31

IF THIS MEASUREMENT DOES NOT MATCH WHAT IS SHOWN, THE SHEET SIZE HAS BEEN MODIFIED FROM: ANSI B

1 in
0

Path: — | File Name: ENG_B_ANSI_B_LAND_STACK_2xROWS_TEXT_IMP.ps

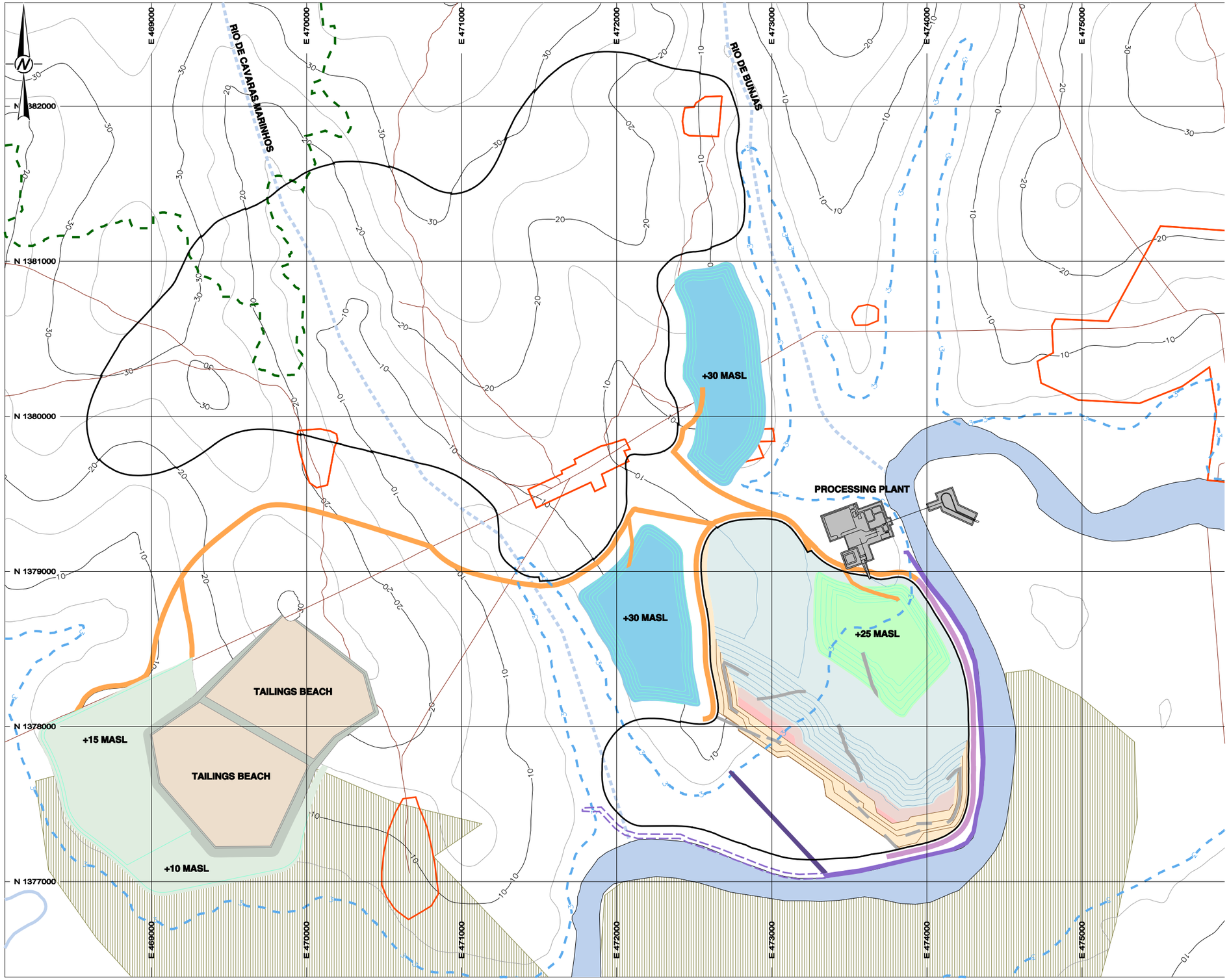

LEGEND

BASE DATA

- MAJOR TOPOGRAPHY CONTOUR (10 M)
- MINOR TOPOGRAPHY CONTOUR (5 M)
- RIVER
- FLOOD EXTENT - 1 IN 100 YEAR EVENT
- EPHEMERAL STREAM
- PERMANENT RIVER CACHEU PROTECTION BUND
- TEMPORARY RIVER CACHEU PROTECTION BUND
- HIGH AND MODERATE ECOLOGICAL INTEGRITY BOUNDARY
- EXISTING ROAD
- 25-YEAR PIT CREST
- WETLANDS
- EXISTING TOWNSHIP

END-OF-YEAR (EOY) FEATURES

- EOY PIT CREST (10 M)
- EOY IN-PIT OVERBURDEN BACKFILL (IOB) CREST (5 M)
- EOY OVERBURDEN STORAGE FACILITY (OSF) CREST (5 M)
- EOY SURCHARGE OVERBURDEN STORAGE (SOS) CREST (5 M)
- EOY OVERBURDEN PRESTRIP ADVANCE
- EOY EXPOSED FPA
- EOY PIT FLOOR
- EOY IN-PIT OVERBURDEN BACKFILL (IOB)
- EOY OVERBURDEN STORAGE FACILITY (OSF)
- EOY SURCHARGE OVERBURDEN STORAGE (SOS)
- EOY ACCESS RAMPS
- EOY WASTE/MATRIX HAUL ROAD
- EOY MATRIX HAUL ROAD
- RECLAMATION AREA
- PREVIOUSLY RECLAIMED AREA

250 125 0 250 Metres 500 750 1000

SCALE 1:25,000

IF THIS MEASUREMENT DOES NOT MATCH WHAT IS SHOWN, THE SHEET SIZE HAS BEEN MODIFIED FROM: ANSI B

0 1 in

CLIENT
LYCOPODIUM MINERALS CANADA, LTD.

PROJECT
FARIM PHOSPHATE DEPOSIT
2015 DEFINITIVE FEASIBILITY STUDY

TITLE
MINE STATUS MAP
END-OF-YEAR 5

CONSULTANT
Golder Associates

YYYY-MM-DD	2015-06-23
PREPARED	JJW
DESIGN	JJW
REVIEW	
APPROVED	

PROJECT No.	CONTROL	Rev.	FIGURE
152-2131	0002	-	16.32

Path: — | File Name: ENG_B_ANSI_B_LAND_STACK_2xROWS_TEXT_IMP.ps

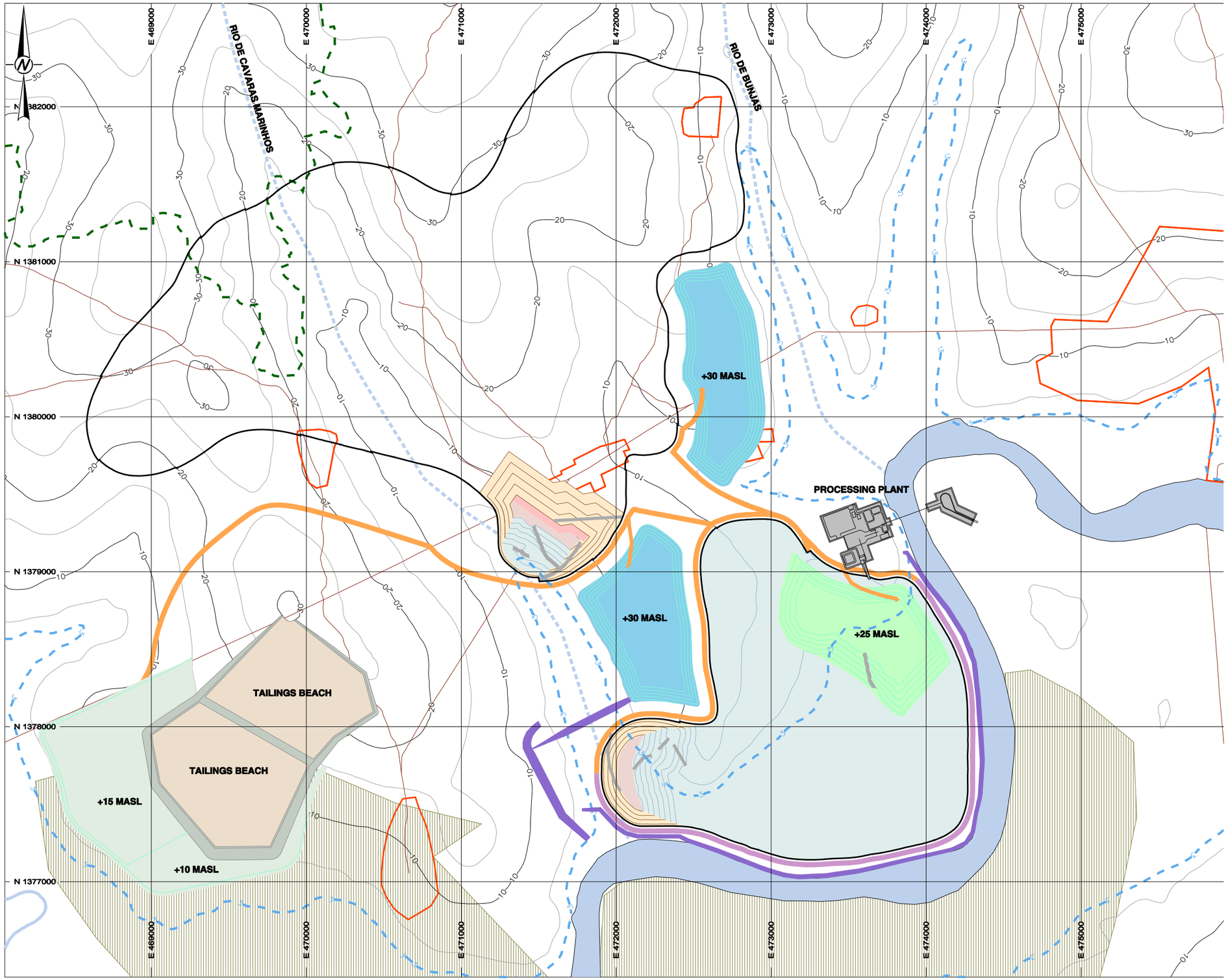

LEGEND

BASE DATA

- MAJOR TOPOGRAPHY CONTOUR (10 M)
- MINOR TOPOGRAPHY CONTOUR (5 M)
- RIVER
- FLOOD EXTENT - 1 IN 100 YEAR EVENT
- EPHEMERAL STREAM
- PERMANENT RIVER CACHEU PROTECTION BUND
- TEMPORARY RIVER CACHEU PROTECTION BUND
- HIGH AND MODERATE ECOLOGICAL INTEGRITY BOUNDARY
- EXISTING ROAD
- 25-YEAR PIT CREST
- WETLANDS
- EXISTING TOWNSHIP

END-OF-YEAR (EOY) FEATURES

- EOY PIT CREST (10 M)
- EOY IN-PIT OVERBURDEN BACKFILL (IOB) CREST (5 M)
- EOY OVERBURDEN STORAGE FACILITY (OSF) CREST (5 M)
- EOY SURCHARGE OVERBURDEN STORAGE (SOS) CREST (5 M)
- EOY OVERBURDEN PRESTRIP ADVANCE
- EOY EXPOSED FPA
- EOY PIT FLOOR
- EOY IN-PIT OVERBURDEN BACKFILL (IOB)
- EOY OVERBURDEN STORAGE FACILITY (OSF)
- EOY SURCHARGE OVERBURDEN STORAGE (SOS)
- EOY ACCESS RAMPS
- EOY WASTE/MATRIX HAUL ROAD
- EOY MATRIX HAUL ROAD
- RECLAMATION AREA
- PREVIOUSLY RECLAIMED AREA

250 125 0 250 Metres 500 750 1000

SCALE 1:25,000

CLIENT
LYCOPODIUM MINERALS CANADA, LTD.

PROJECT
FARIM PHOSPHATE DEPOSIT
2015 DEFINITIVE FEASIBILITY STUDY

TITLE
MINE STATUS MAP
END-OF-YEAR 8

CONSULTANT
Golder Associates

YYYY-MM-DD	2015-06-23
PREPARED	JJW
DESIGN	JJW
REVIEW	
APPROVED	

PROJECT No.	CONTROL	Rev.	FIGURE
152-2131	0002	-	16.33

IF THIS MEASUREMENT DOES NOT MATCH WHAT IS SHOWN, THE SHEET SIZE HAS BEEN MODIFIED FROM: ANSI B

1 in
0

Path: — | File Name: ENG_B_ANSI_B_LAND_STACK_2xROWS_TEXT_IMP.ps

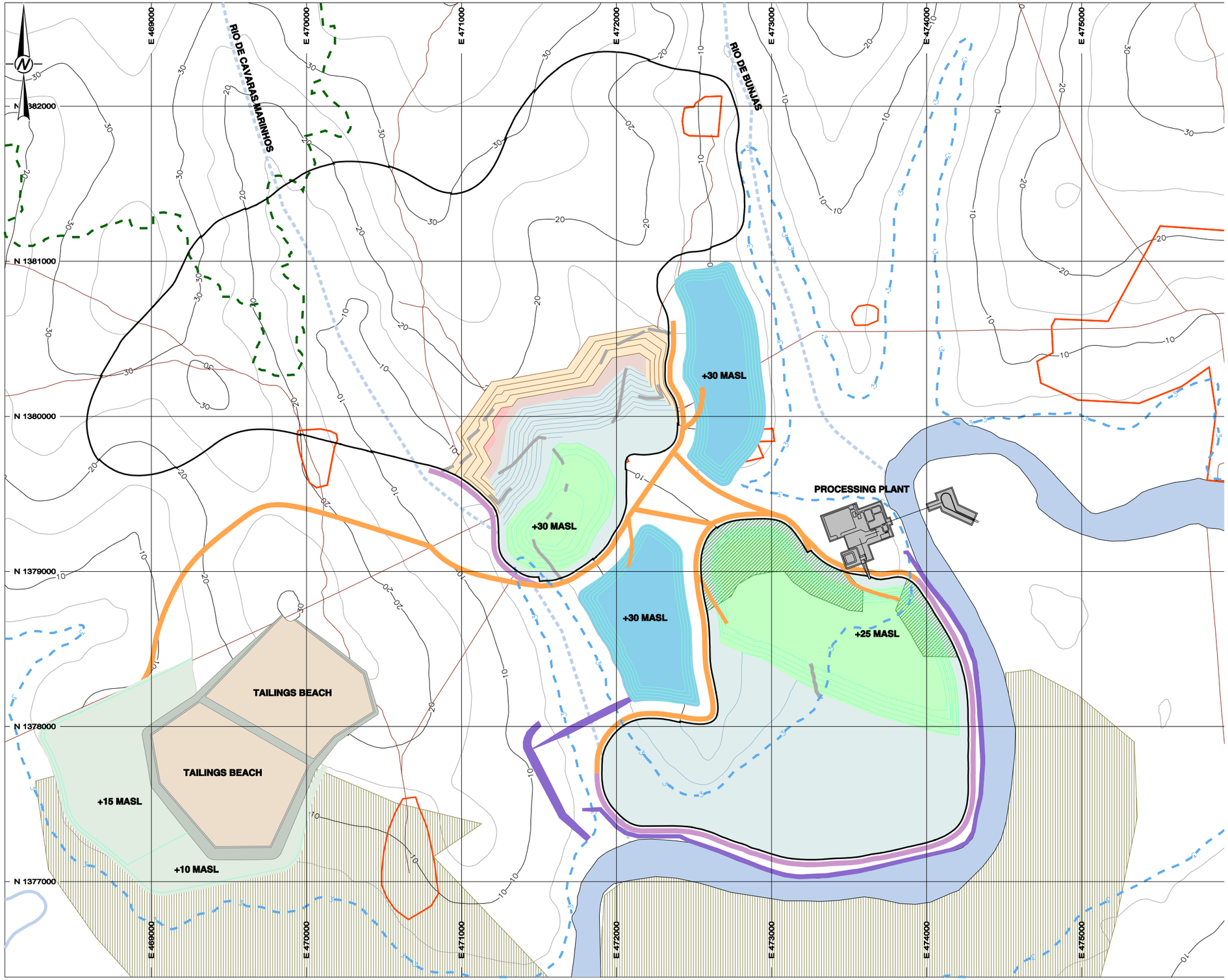

LEGEND

BASE DATA

- MAJOR TOPOGRAPHY CONTOUR (10 M)
- MINOR TOPOGRAPHY CONTOUR (5 M)
- RIVER
- FLOOD EXTENT - 1 IN 100 YEAR EVENT
- EPHEMERAL STREAM
- PERMANENT RIVER CACHEU PROTECTION BUND
- TEMPORARY RIVER CACHEU PROTECTION BUND
- HIGH AND MODERATE ECOLOGICAL INTEGRITY BOUNDARY
- EXISTING ROAD
- 25-YEAR PIT CREST
- WETLANDS
- EXISTING TOWNSHIP

END-OF-YEAR (EOY) FEATURES

- EOY PIT CREST (10 M)
- EOY IN-PIT OVERBURDEN BACKFILL (IOB) CREST (5 M)
- EOY OVERBURDEN STORAGE FACILITY (OSF) CREST (5 M)
- EOY SURCHARGE OVERBURDEN STORAGE (SOS) CREST (5 M)
- EOY OVERBURDEN PRESTRIP ADVANCE
- EOY EXPOSED FPA
- EOY PIT FLOOR
- EOY IN-PIT OVERBURDEN BACKFILL (IOB)
- EOY OVERBURDEN STORAGE FACILITY (OSF)
- EOY SURCHARGE OVERBURDEN STORAGE (SOS)
- EOY ACCESS RAMPS
- EOY WASTE/MATRIX HAUL ROAD
- EOY MATRIX HAUL ROAD
- RECLAMATION AREA
- PREVIOUSLY RECLAIMED AREA

250 125 0 250 Metres 500 750 1000

SCALE 1:25,000

IF THIS MEASUREMENT DOES NOT MATCH WHAT IS SHOWN, THE SHEET SIZE HAS BEEN MODIFIED FROM: ANSI B

CLIENT
LYCOPODIUM MINERALS CANADA, LTD.

PROJECT
FARIM PHOSPHATE DEPOSIT
2015 DEFINITIVE FEASIBILITY STUDY

TITLE
MINE STATUS MAP
END-OF-YEAR 10

CONSULTANT
Golder Associates

YYYY-MM-DD	2015-06-23
PREPARED	JJW
DESIGN	JJW
REVIEW	
APPROVED	

PROJECT No.	CONTROL	Rev.	FIGURE
152-2131	0002	-	16.34

Path: — | File Name: ENG_B_ANSI_B_LAND_STACK_2xROWS_TEXT_IMP.ps

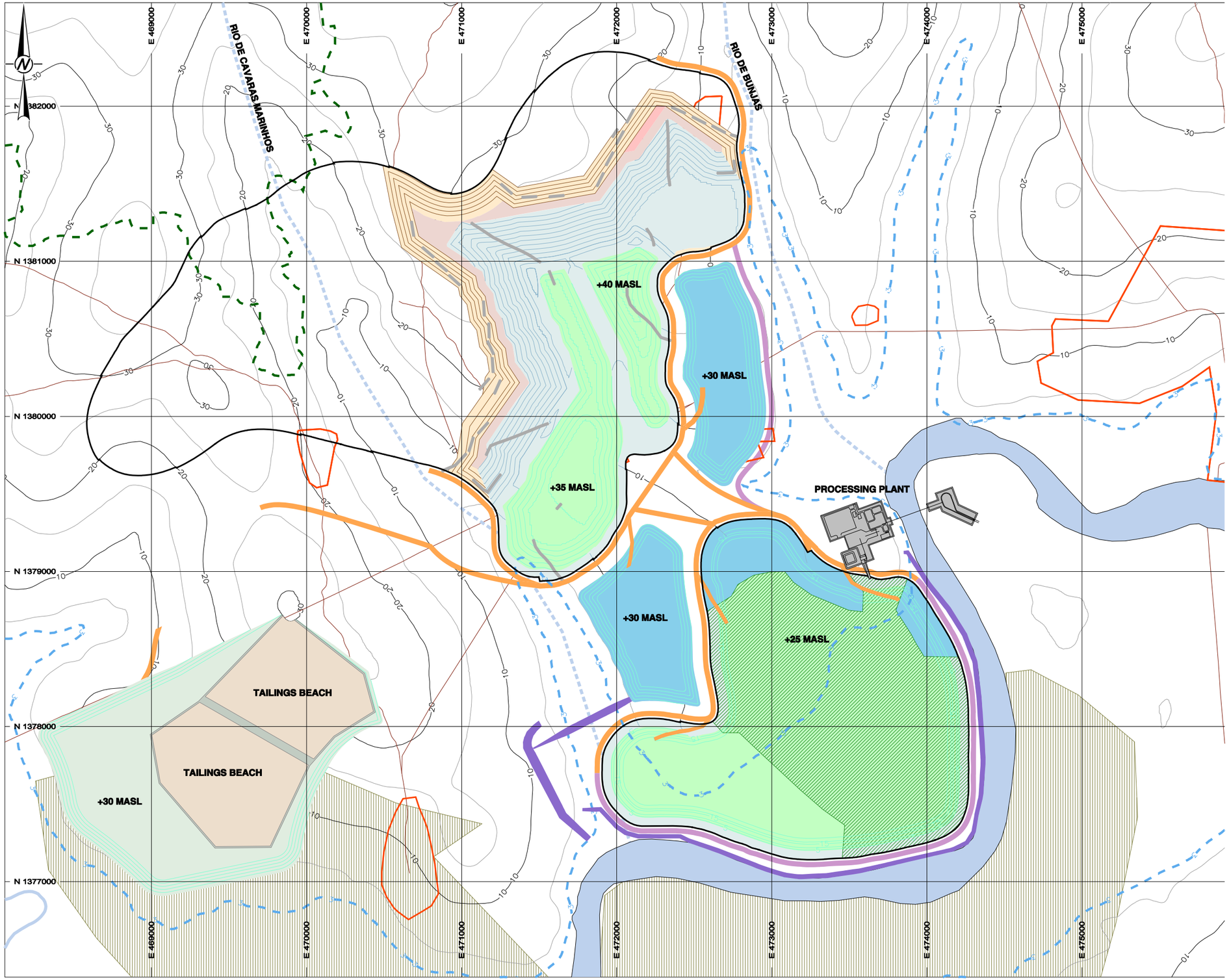

LEGEND

BASE DATA

- MAJOR TOPOGRAPHY CONTOUR (10 M)
- MINOR TOPOGRAPHY CONTOUR (5 M)
- RIVER
- FLOOD EXTENT - 1 IN 100 YEAR EVENT
- EPHEMERAL STREAM
- PERMANENT RIVER CACHEU PROTECTION BUND
- TEMPORARY RIVER CACHEU PROTECTION BUND
- HIGH AND MODERATE ECOLOGICAL INTEGRITY BOUNDARY
- EXISTING ROAD
- 25-YEAR PIT CREST
- WETLANDS
- EXISTING TOWNSHIP

END-OF-YEAR (EOY) FEATURES

- EOY PIT CREST (10 M)
- EOY IN-PIT OVERBURDEN BACKFILL (IOB) CREST (5 M)
- EOY OVERBURDEN STORAGE FACILITY (OSF) CREST (5 M)
- EOY SURCHARGE OVERBURDEN STORAGE (SOS) CREST (5 M)
- EOY OVERBURDEN PRESTRIP ADVANCE
- EOY EXPOSED FPA
- EOY PIT FLOOR
- EOY IN-PIT OVERBURDEN BACKFILL (IOB)
- EOY OVERBURDEN STORAGE FACILITY (OSF)
- EOY SURCHARGE OVERBURDEN STORAGE (SOS)
- EOY ACCESS RAMPS
- EOY WASTE/MATRIX HAUL ROAD
- EOY MATRIX HAUL ROAD
- RECLAMATION AREA
- PREVIOUSLY RECLAIMED AREA

250 125 0 250 Metres 500 750 1000

SCALE 1:25,000

CLIENT
LYCOPODIUM MINERALS CANADA, LTD.

PROJECT
FARIM PHOSPHATE DEPOSIT
2015 DEFINITIVE FEASIBILITY STUDY

TITLE
MINE STATUS MAP
END-OF-YEAR 15

CONSULTANT
Golder Associates

YYYY-MM-DD	2015-06-23
PREPARED	JJW
DESIGN	JJW
REVIEW	
APPROVED	

PROJECT No.	CONTROL	Rev.	FIGURE
152-2131	0002	-	16.35

IF THIS MEASUREMENT DOES NOT MATCH WHAT IS SHOWN, THE SHEET SIZE HAS BEEN MODIFIED FROM: ANSI B

1 in
0

Path: — | File Name: ENG_B_ANSI_B_LAND_STACK_2xROWS_TEXT_IMP.ps

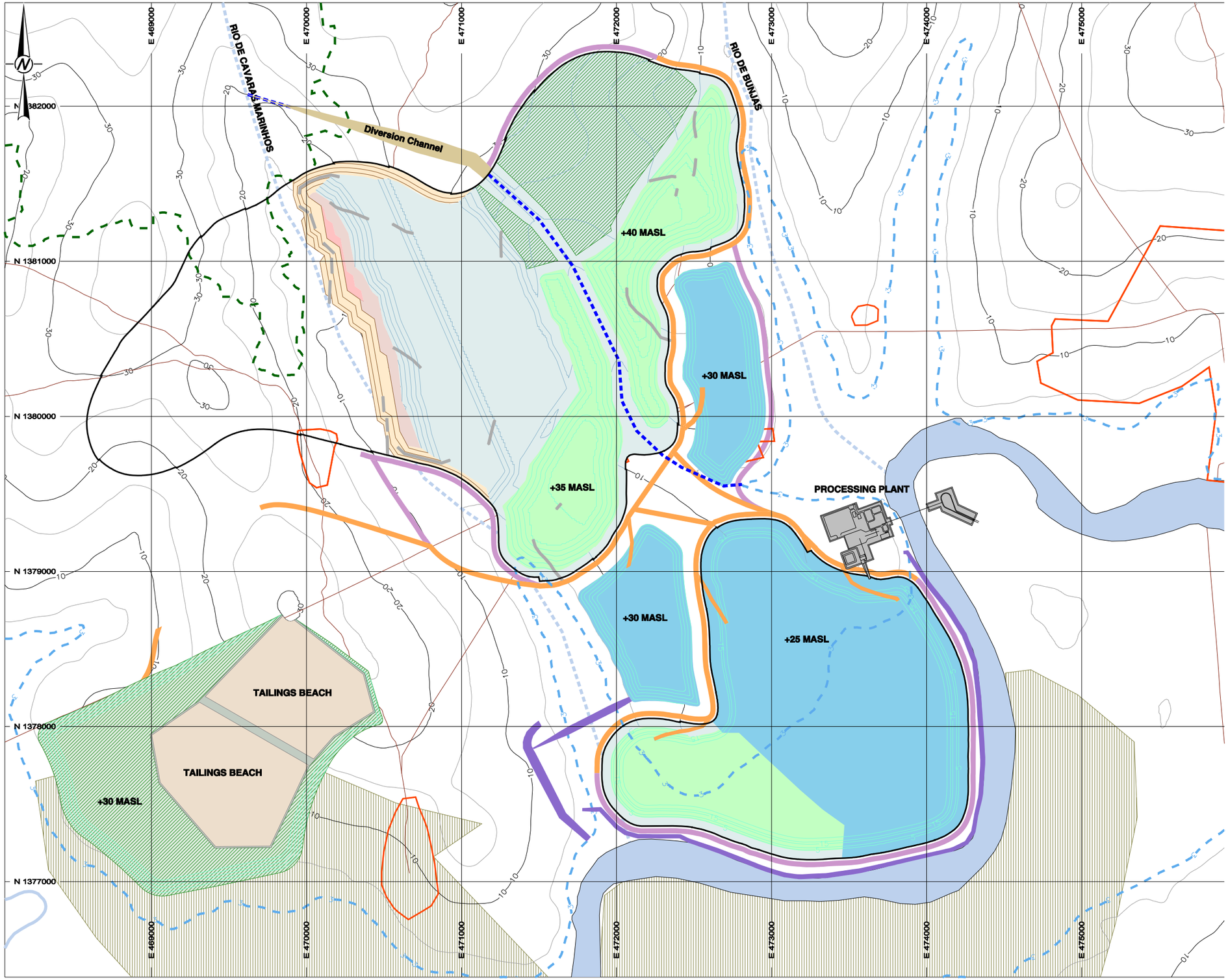

LEGEND

BASE DATA

- MAJOR TOPOGRAPHY CONTOUR (10 M)
- MINOR TOPOGRAPHY CONTOUR (5 M)
- RIVER
- FLOOD EXTENT - 1 IN 100 YEAR EVENT
- EPHEMERAL STREAM
- PERMANENT RIVER CACHEU PROTECTION BUND
- TEMPORARY RIVER CACHEU PROTECTION BUND
- HIGH AND MODERATE ECOLOGICAL INTEGRITY BOUNDARY
- EXISTING ROAD
- 25-YEAR PIT CREST
- WETLANDS
- EXISTING TOWNSHIP

END-OF-YEAR (EOY) FEATURES

- EOY PIT CREST (10 M)
- EOY IN-PIT OVERBURDEN BACKFILL (IOB) CREST (5 M)
- EOY OVERBURDEN STORAGE FACILITY (OSF) CREST (5 M)
- EOY SURCHARGE OVERBURDEN STORAGE (SOS) CREST (5 M)
- EOY OVERBURDEN PRESTRIP ADVANCE
- EOY EXPOSED FPA
- EOY PIT FLOOR
- EOY IN-PIT OVERBURDEN BACKFILL (IOB)
- EOY OVERBURDEN STORAGE FACILITY (OSF)
- EOY SURCHARGE OVERBURDEN STORAGE (SOS)
- EOY ACCESS RAMPS
- EOY WASTE/MATRIX HAUL ROAD
- EOY MATRIX HAUL ROAD
- RECLAMATION AREA
- PREVIOUSLY RECLAIMED AREA

250 125 0 250 Metres 500 750 1000

SCALE 1:25,000

CLIENT
LYCOPODIUM MINERALS CANADA, LTD.

PROJECT
FARIM PHOSPHATE DEPOSIT
2015 DEFINITIVE FEASIBILITY STUDY

TITLE
MINE STATUS MAP
END-OF-YEAR 20

CONSULTANT
Golder Associates

YYYY-MM-DD	2015-06-23
PREPARED	JJW
DESIGN	JJW
REVIEW	
APPROVED	

PROJECT No.	CONTROL	Rev.	FIGURE
152-2131	0002	-	16.36

IF THIS MEASUREMENT DOES NOT MATCH WHAT IS SHOWN, THE SHEET SIZE HAS BEEN MODIFIED FROM: ANSI B

Path: — | File Name: ENG_B_ANSI_B_LAND_STACK_2xROWS_TEXT_IMP.ps

LEGEND

BASE DATA

- MAJOR TOPOGRAPHY CONTOUR (10 M)
- MINOR TOPOGRAPHY CONTOUR (5 M)
- RIVER
- FLOOD EXTENT - 1 IN 100 YEAR EVENT
- EPHEMERAL STREAM
- PERMANENT RIVER CACHEU PROTECTION BUND
- TEMPORARY RIVER CACHEU PROTECTION BUND
- HIGH AND MODERATE ECOLOGICAL INTEGRITY BOUNDARY
- EXISTING ROAD
- 25-YEAR PIT CREST
- WETLANDS
- EXISTING TOWNSHIP

END-OF-YEAR (EOY) FEATURES

- EOY PIT CREST (10 M)
- EOY IN-PIT OVERBURDEN BACKFILL (IOB) CREST (5 M)
- EOY OVERBURDEN STORAGE FACILITY (OSF) CREST (5 M)
- EOY SURCHARGE OVERBURDEN STORAGE (SOS) CREST (5 M)
- EOY OVERBURDEN PRESTRIP ADVANCE
- EOY EXPOSED FPA
- EOY PIT FLOOR
- EOY IN-PIT OVERBURDEN BACKFILL (IOB)
- EOY OVERBURDEN STORAGE FACILITY (OSF)
- EOY SURCHARGE OVERBURDEN STORAGE (SOS)
- EOY ACCESS RAMPS
- EOY WASTE/MATRIX HAUL ROAD
- EOY MATRIX HAUL ROAD
- RECLAMATION AREA
- PREVIOUSLY RECLAIMED AREA

250 125 0 250 Metres 500 750 1000

SCALE 1:25,000

CLIENT
LYCOPODIUM MINERALS CANADA, LTD.

PROJECT
FARIM PHOSPHATE DEPOSIT
2015 DEFINITIVE FEASIBILITY STUDY

TITLE
MINE STATUS MAP
END-OF-YEAR 26

CONSULTANT
Golder Associates

YYYY-MM-DD	2015-06-23
PREPARED	JJW
DESIGN	JJW
REVIEW	
APPROVED	

PROJECT No.	CONTROL	Rev.	FIGURE
152-2131	0002	-	16.37

IF THIS MEASUREMENT DOES NOT MATCH WHAT IS SHOWN, THE SHEET SIZE HAS BEEN MODIFIED FROM: ANSI B

Path: — | File Name: ENG_B_ANSI_B_LAND_STACK_2xROWS_TEXT_IMP.ps

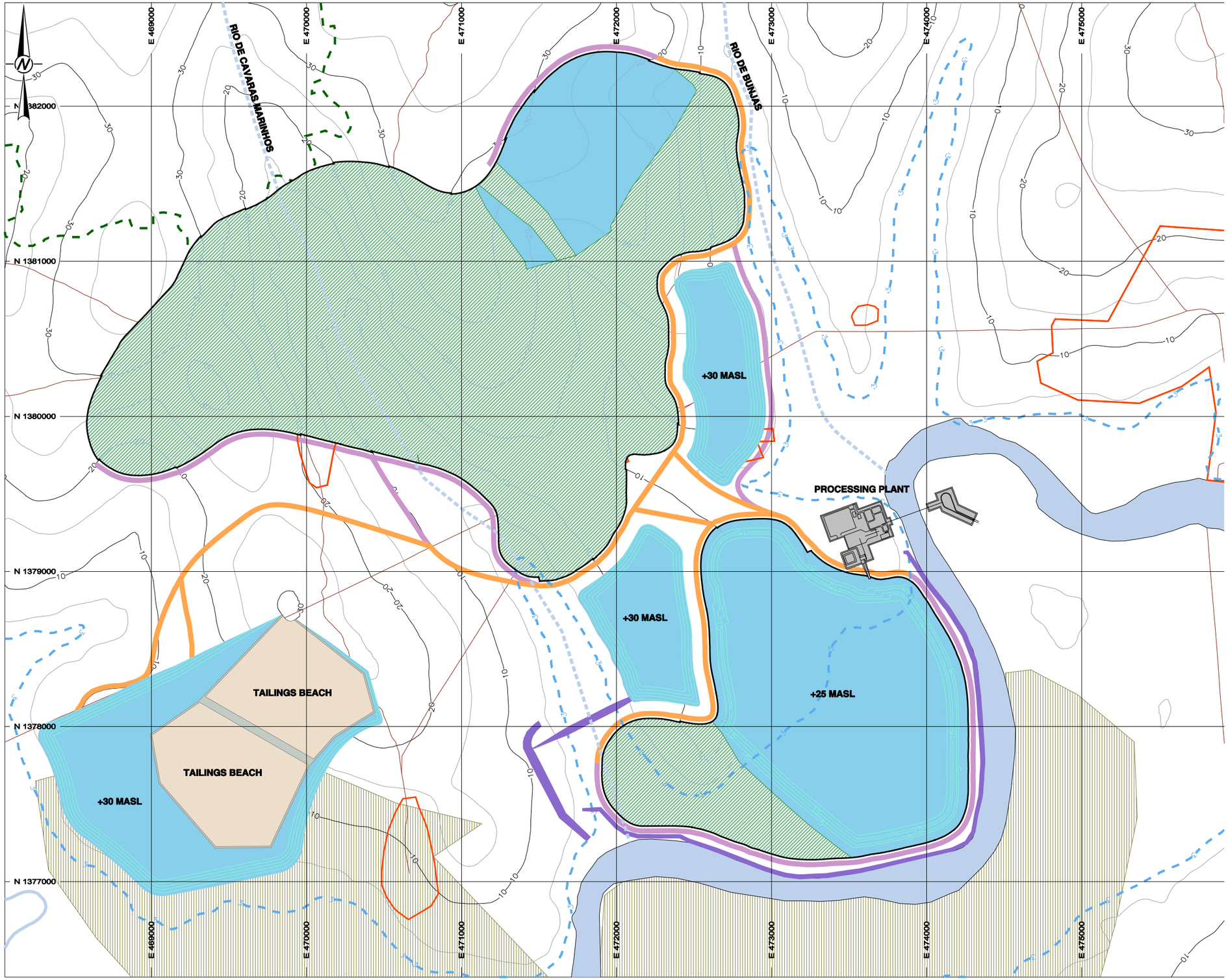

LEGEND

BASE DATA

- MAJOR TOPOGRAPHY CONTOUR (10 M)
- MINOR TOPOGRAPHY CONTOUR (5 M)
- RIVER
- FLOOD EXTENT - 1 IN 100 YEAR EVENT
- EPHEMERAL STREAM
- PERMANENT RIVER CACHEU PROTECTION BUND
- TEMPORARY RIVER CACHEU PROTECTION BUND
- HIGH AND MODERATE ECOLOGICAL INTEGRITY BOUNDARY
- EXISTING ROAD
- 25-YEAR PIT CREST
- WETLANDS
- EXISTING TOWNSHIP

END-OF-YEAR (EOY) FEATURES

- EOY PIT CREST (10 M)
- EOY IN-PIT OVERBURDEN BACKFILL (IOB) CREST (5 M)
- EOY OVERBURDEN STORAGE FACILITY (OSF) CREST (5 M)
- EOY SURCHARGE OVERBURDEN STORAGE (SOS) CREST (5 M)
- EOY OVERBURDEN PRESTRIP ADVANCE
- EOY EXPOSED FPA
- EOY PIT FLOOR
- EOY IN-PIT OVERBURDEN BACKFILL (IOB)
- EOY OVERBURDEN STORAGE FACILITY (OSF)
- EOY SURCHARGE OVERBURDEN STORAGE (SOS)
- EOY ACCESS RAMPS
- EOY WASTE/MATRIX HAUL ROAD
- EOY MATRIX HAUL ROAD
- RECLAMATION AREA
- PREVIOUSLY RECLAIMED AREA

250 125 0 250 Metres 500 750 1000

SCALE 1:25,000

CLIENT
LYCOPODIUM MINERALS CANADA, LTD.

PROJECT
FARIM PHOSPHATE DEPOSIT
2015 DEFINITIVE FEASIBILITY STUDY

TITLE
MINE STATUS MAP
POST BACKFILL OF NORTH PIT VOID

CONSULTANT
Golder Associates

YYYY-MM-DD	2015-06-23
PREPARED	JJW
DESIGN	JJW
REVIEW	
APPROVED	

PROJECT No.	CONTROL	Rev.	FIGURE
152-2131	0002	-	16.38

IF THIS MEASUREMENT DOES NOT MATCH WHAT IS SHOWN, THE SHEET SIZE HAS BEEN MODIFIED FROM: ANSI B

APPENDIX 1-B4

PROCESS DESIGN CRITERIA

(17 Pages)

GB MINERALS LIMITED

FARIM PHOSPHATE PROJECT

Process Design Criteria

Prepared By:

Lycopodium

Job No:5036

REV NO.	DATE	DESCRIPTION OF REVISION	BY	DESIGN APPROVAL	PROJECT APPROVAL
B	24/07/2015	Issued for Report			
A	20/11/2015	Issued for Review	SC	IM	DM

REVISION RECORD

Client	GB Minerals Ltd.
Project	Farim Phosphate Project
Document	
Job No	

Date	Revision	Description	Reason	Initials
20-Nov-14	A	Issued for Review	For Review	SC
24-Jul-15	B	Issued for Report	Updated with Process Revisions	SC

REFERENCE DOCUMENTS

Client	GB Minerals Ltd.
Project	Farim Phosphate Project
	PROCESS DESIGN CRITERIA
	5036

Ref No.	Description
1	Feasibility of the Beneficiated Rock Concentrate of the Farim Phosphate Project, Guinea-Bissau, An NI 43-101 Report by GMB Minerals Engineering Consultants Limited Dated Dec. 19, 2012
2	2012 Ground Characterisation - Factual Report by Gold Associates Dated Oct. 2013
3	Process Design Basis Rev B by KEMWorks Technology Inc. Dated Oct. 7, 2014
4	Evaluation of Farim Phosphate Beneficiation Test Report Rev. B by KEMWorks Technology Inc. Dated October 7, 2014
5	Farim Phosphate Project Equipment List Rev A by KEMWorks Technology Inc. Dated Oct. 7, 2014
6	Farim Phosphate Project Mass Balance Rev A by KEMWorks Technology Inc. Dated Oct. 7, 2014
7	Farim Phosphate Project Equipment List Rev B by KEMWorks Technology Inc. Dated Nov. 3, 2014
8	Process Design Basis Rev C by KEMWorks Technology Inc. Dated Nov. 5, 2014
9	NaOH Consumption, Email from Jennifer Burnham, "RE: 5036 - Farim - PDC for KEMWorks' Review", Dated Nov. 6, 2014 10:49 AM
10	Process Design Criteria Review by KEMWorks, Transmittal 6, Dated Nov. 12, 2014
11	Process Mass Balance Rev D by KEMWorks Technology Inc. Dated July 1, 2015
12	Process Design Criteria Mark-ups by KEMWorks, Dated July 2, 2015
13	Thickening Test Report by Outotec, Dated July 21, 2015
14	Tailings Physical Testing Memo by Knight Piesold Consulting, Dated June 16, 2015

Client	GB Minerals Ltd.	Date	24-Jul-15	Revision	B
Project	Farim Phosphate Project	Job Number	5036	Prepared	SC
Document	PROCESS DESIGN CRITERIA			Checked	IM

			Units		Rev	Source	Ref
SOURCE LEGEND							
1	Client	Owner Reference Documents / Owner Advice					
2	Agreed	Agreement of Meeting Between Owner and Lycopodium					
3	Test	Metallurgical Testwork					
4	Cons	External Consultants (KEMWorks)					
5	Lyco	Lycopodium Experience					
6	Industry	Generally Accepted Practice					
7	Calc	Calculated From Given Data					
8	Vendor	Vendor Recommendations or Standard Specifications					
9	Assumed	Assumption Requiring Verification					

1.0 SITE CHARACTERISTICS

Location (Process Plant)				Northern Part of Central Guinea Bissau, West Africa	A	Client	3
Weather data (See 5036-GDS-001 Site Data Sheet for more information)							
Outdoor design temperature			ºC, max/min	45 / 16	A	Cons	3
Average annual precipitation			mm	1977	A	Cons	3
Normal atmospheric pressure			bar	1.008	A	Cons	3
Relative humidity			%, max/min/normal	TBD / 30 / TBD	A	Cons	3
Plant datum elevation above mean sea level			m	10.0	A	Lyco	

2.0 ORE AND WATER CHARACTERISTICS

Ore							
Throughput ROM - plant			dry t/a	1,750,000	A	Cons	4
Ore reserves			Mt	33.0	A	Client	1
Proven			Mt	29.5	A	Client	1
Probable			Mt	3.5	A	Client	1
Plant feed ore grade		P_2O_5	%	32.90	B	Cons	12
		CaO	%	45.50	B	Cons	12
		Al_2O_3	%	1.07	B	Cons	12
		Fe_2O_3	%	2.92	B	Cons	12
		MgO	%	0.67	B	Cons	12
		SiO_2 Insoluble	%	4.90	B	Cons	12
		Reactive Silica	%	N/A	B	Cons	12
Particle Size Distribution		Opening Size					
		1.18 mm	% passing	95.1	B	Cons	12
		0.42 mm	% passing	87.3	B	Cons	12
		0.105 mm	% passing	38.9	B	Cons	12
		0.074 mm	% passing	33.7	B	Cons	12
		0.053 mm	% passing	29.7	B	Cons	12
		0.038 mm	% passing	26.8	B	Cons	12
		0.020 mm	% passing	22.6	B	Cons	12
		0.008 mm	% passing	0.0	A	Test	4
Moisture - range			%	18 to 27	B	Cons	12
Moisture - design			%	18	B	Cons	11
Bulk density			t/m^3	1.40	B	Cons	12
Specific Gravity			-	3.07	A	Cons	3
Angle of repose			deg.	35	A	Cons	
Recovery							
Overall Recovery			%	75.5	B	Cons	12
Production							
Concentrate produced			t/a	1,321,250	B	Calc	11
Concentrate SG				2.7	A	Cons	
Concentrate bulk density			t/m^3	1.2 to 1.5	A	Assumed	
Design concentrate bulk density			t/m^3	1.35	B	Lyco	

			Units		Rev	Source	Ref
Concentrate grade	P_2O_5		%	34.00	B	Cons	12
	CaO		%	46.90	B	Cons	12
	Al_2O_3		%	0.68	B	Cons	12
	Fe_2O_3		%	2.17	B	Cons	12
	MgO		%	0.12	B	Cons	12
	SiO_2 Insoluble		%	6.42	B	Cons	12
	Reactive Silica		%	TBD	A	Cons	3

3.0 OPERATING SCHEDULE

Scheduled working days	Mine Site		d/a	250	A	Client	3
	Beneficiation Plant		d/a	333	A	Client	3
MINE SITE OPERATION							
Operating hours per day			hrs	24	A	Client	3
Operating days per year			d	365	A	Client	
Availability			%	68	A	Calc	
Operating hours per year			hrs	6000	A	Calc	
Feed rate	Operating		dry t/h	292	A	Calc	
	Operating		wet t/h	356	A	Calc	
BENEFICIATION PLANT OPERATION							
Operating hours per day			hrs	24	A	Client	3
Operating days per year			d	365	A	Client	
Availability			%	91	A	Calc	
Operating hours per year			hrs	8000	A	Calc	
Feed rate	Operating		dry t/h	219	A	Calc	
	Operating		wet t/h	267	A	Calc	

4.0 FEED PREPARATION, STOCKPILE & RECLAIM

Run of Mine (ROM) ore will be trucked from the pits to the ROM stockpile and either direct tipped or reclaimed by Front End Loader (FEL) to the ROM bin via a static grizzly. ROM material from the ROM bin is withdrawn by a belt feeder and conveyed to feed the Horizontal Scrubber. B Lyco

ROM Stockpile Capacity							
Capacity		Live	weeks	5.0	B	Client	
		Live	days	35.0	B	Calc	
			tonnes	245,000	B	Calc	
		Total	tonnes	250,000	B	Lyco	
			days	35.7	B	Calc	
Truck Type				CAT 770			
Capacity			wet t	37.0	B	Vendor	
Front-End Loader Type				CAT 980H or similar	A	Lyco	
Capacity			t	7.7	A	Vendor	
Ore	R.O.M. size, 100% passing		mm	25	A	Client	1
	R.O.M. size, 80% passing		mm	0.20	A	Test	4
Grizzly			mm	50 x 50	A	Lyco	
Rock Breaker at ROM Bin				No	A	Lyco	
ROM Bin							
Number of units			Qty	1	A	Lyco	
Capacity per unit	No. of trucks		-	3	A	Lyco	
	Operating		wet t	111	B	Calc	
	Live Volume		m^3	79	B	Calc	
Primary Feeder							
Type				Belt	A	Lyco	
Number of units			Qty	1	A	Lyco	
Capacity per unit	Operating		dry t/h	219	A	Calc	
	Design		dry t/h	252	B	Lyco	

			Units		Rev	Source	Ref
Scrubber Feed Conveyor							
Capacity	Operating		dry t/h	219	A	Calc	
			wet t/h	267	A	Calc	
	Design		dry t/h	252	B	Lyco	
			wet t/h	307	A	Calc	
	Max material size, 100% passing		mm	25	A	Client	1

5.0 SCRUBBING & SIZING

ROM ore will be conveyed to the scrubbing and sizing circuit, which consists of a horizontal scrubber, attrition scrubber, hydrosizers, reject screens and desliming and classification cyclones.

First, ROM ore will be fed to the horizontal scrubber where it will be mixed with process water and scrubbed at 35% solids. It will then be fed to a vibrating screen where +5.0 and -5.0 mm material are separated. The -5.0 mm material from the screens will fall by gravity to the primary desliming pump tank from where it will be pumped to the primary desliming cyclone to remove -75 micron material. The +5.0 mm material is considered reject and will be stockpiled to be transport off-site.

Primary desliming cyclone underflow will fall by gravity to the agitated secondary desliming pump tank from where it will be pumped to the secondary desliming cyclone to remove -75 micron material. Secondary desliming cyclone underflow will fall by gravity to the attrition scrubber which is used to clean the surfaces of the feed material and release agglomerated clay, iron and phosphate particles at an operating density of 55% solids. Primary and secondary desliming cyclone overflows will flow by gravity to the classification cyclone feed tank. B Cons

After attrition scrubbing, the liberated -5.0 mm material will be sent to a vibrating screen to separate +1.18 mm and -1.18 mm material. The +1.18 mm material will be stockpiled with the +5.0 mm reject material and the -1.18 mm material will fall by gravity to the agitated hydrosizer feed tank. This material will then be pumped from the tank to the hydrosizers for additional separation at 0.105 mm material. Hydrosizer underflow at -1.18mm +0.105 mm will be sent to the filter feed tank for dewatering.

Hydrosizer overflow at -0.105mm will be combined with the primary and secondary desliming cyclone overflows in the classification cyclone feed tank from where the material will be pumped to clasification hydrocyclones. Hydrocyclones underflow will become the 0.105 x 0.020 mm fine feed that reports to the fine concentrate pump tank. The -0.020 mm hydrocyclones overflow will be rejected as slimes and will be sent to the coarse tailings tank. The coarse tailings will be pumped to the tailing thickener.

Horizontal Scubber							
Type				Rotary drum	A	Cons	5
Size	Diameter		m	3.6	B	Vendor	
	EGL		m	10.0	B	Vendor	
Capacity - scrubbing			dry t/h	250	A	Cons	10
Retention time			mins	5	B	Cons	12
Feed size	F80		mm	0.2	A	Test	4
Material of construction				RLCS	A	Cons	
Scrubber discharge % solids			% w/w	35%	B	Cons	11
Reject Screen 1							
Type				Vibrating, Single-deck, Horizontal	B	Cons	5
Screen deck				Urethane	A	Cons	
Aperture			mm	5 mm, slotted,Co-Flow 2:1	A	Cons	
Capacity - screening			dry t/h	219	B	Cons	7
Spray water			m^3/h	355	B	Vendor	
Feed to Oversize			%	6.5	B	Cons	11
Oversize % solids			%	85	A	Cons	6
Primary Desliming Pump Tank							
Number of units			tank	1	B	Cons	11
Nominated tank size	Live		m^3	32	B	Lyco	11
Residence time			mins	2	B	Cons	12
Primary Desliming Cyclone Specifications							
Target product size	P100		micron	75	B	Cons	12
Cyclone diameter			mm	250	B	Vendor	12
Vortex diameter			mm	100	B	Vendor	12
Operating pressure			kPa	110	B	Vendor	12
	Operating -Total			11	B	Vendor	12
	Standby			2	B	Vendor	12
	Blank ports			0	B	Vendor	12
	Total ports on cluster			13	B	Vendor	12

			Units		Rev	Source	Ref
	Solids flow to underflow		% feed	84	B	Cons	11
	Solids % in underflow		%	45	B	Cons	11
Primary Desliming Cyclone Flow Parameters							
	Classification cyclone flow data	Feed	t solids/h	204	B	Calc	11
			t water/h	760	B	Calc	11
			t slurry/h	965	B	Calc	11
			m^3/h	827	B	Calc	11
			% solids	21.2	B	Calc	11
			slurry SG	1.17	B	Calc	11
		Overflow	t solids/h	33.2	B	Calc	11
			t water/h	551.0	B	Calc	11
			t slurry/h	584.2	B	Calc	11
			m^3/h	561.8	B	Calc	11
			% solids	5.7	B	Calc	11
			slurry SG	1.0	B	Calc	11
		Underflow	t solids/h	171.3	B	Calc	11
			t water/h	209.4	B	Calc	11
			t slurry/h	380.7	B	Calc	11
			m^3/h	265.2	B	Calc	11
			% solids	45.0	B	Calc	11
			slurry SG	1.4	B	Calc	11
Secondary Desliming Pump Tank							
	Number of units		tank	1	B	Cons	11
	Nominated tank size	Live	m^3	29	B	Lyco	11
	Residence time		mins	2	B	Cons	12
Secondary Desliming Cyclone Specifications							
	Target product size	P100	micron	75	B	Cons	12
	Cyclone diameter		mm	400	B	Vendor	12
	Vortex diameter		mm	150	B	Vendor	12
	Operating pressure		kPa	97	B	Vendor	12
		Operating -Total		6	B	Vendor	12
		Standby		2	B	Vendor	12
		Blank ports		-	B	Vendor	12
		Total ports on cluster		8	B	Vendor	12
	Solids flow to underflow		% feed	81	B	Cons	11
	Solids % in underflow		%	55	B	Cons	11
Secondary Desliming Cyclone Flow Parameters							
	Classification cyclone flow data	Feed	t solids/h	171.3	B	Calc	11
			t water/h	685.3	B	Calc	11
			t slurry/h	856.6	B	Calc	11
			m^3/h	741.1	B	Calc	11
			% solids	20.0	B	Vendor	
			slurry SG	1.2	B	Calc	11
		Overflow	t solids/h	33.2	B	Calc	11
			t water/h	572.3	B	Calc	11
			t slurry/h	605.4	B	Calc	11
			m^3/h	583.1	B	Calc	11
			% solids	5.5	B	Calc	11
			slurry SG	1.0	B	Calc	11
		Underflow	t solids/h	138.2	B	Calc	11
			t water/h	113.0	B	Calc	11
			t slurry/h	251.2	B	Calc	11
			m^3/h	158.0	B	Calc	11
			% solids	55.0	B	Calc	11
			slurry SG	1.6	B	Calc	11

			Units		Rev	Source	Ref
Attrition Scubber							
Type				4 compartments, rectangular	A	Cons	5
Size	L x W x H		m	5.7 x 1.4 x 2.1	B	Vendor	
	Volume		m^3/compartment	4	B	Vendor	
Capacity - scrubbing			dry t/h	219	A	Calc	
Retention time			mins	5	B	Cons	12
Material of construction				RLCS	A	Cons	5
Scrubber discharge % solids			% w/w	55%	B	Cons	12
Reject Screen 2							
Type				Vibrating, Single-deck	A	Cons	5
Screen deck				Rubber	A	Cons	
Aperture			mm	1 mm, slotted, cross flow	A	Cons	
Spray water			m^3/h	84	B	Cons	12
Feed to Oversize			%	5.0	B	Cons	11
Oversize % solids			%	85	A	Cons	6
Rejects Stockpile							
Capacity		Live	h	24.0	A	Lyco	
		Live	days	1.0	A	Calc	
			wet tonnes	598	B	Calc	
		Total	wet tonnes	690	B	Lyco	
			days	1.2	A	Calc	
Hydrosizer Feed Tank							
Number of units			tank	1	A	Cons	7
Nominated tank size		Live	m^3	121	B	Lyco	
Residence time			mins	30	A	Cons	8
Hydrosizers							
Type				Vertical current classifier	A	Cons	5
Number of units				2	A	Cons	5
Capacity per unit			dry t/h	66	B	Cons	7
Feed % solids			%	40	B	Cons	11
Bed Density				TBD	A	Cons	
Teeter Water per unit			t/h	450	A	Cons	6
Solid flow to hydrosizer underflow			% feed	90%	B	Cons	11
Underflow % solids			%	70%	A	Cons	6
Hydrosizer Underflow Dilution Tank							
Number of units			tank	1	B	Lyco	
Dilution			% solids	55	B	Lyco	
Nominated tank size		Live	m^3	23	B	Lyco	
Residence time			mins	10	B	Lyco	
Classification Cyclone Feed Tank							
Number of units			tank	1	A	Cons	7
Nominated tank size		Live	m^3	74	B	Lyco	
Residence time			mins	2	A	Cons	8
Classification Cyclone Feed Pumps							
Cyclone Distributor Feed Stream Flow Data			t solids/h	79	B	Cons	12
			t water/h	2,171	B	Calc	
			t slurry/h	2,206	B	Calc	
			m^3/h	2,197	B	Calc	
			% solids	4	B	Cons	12
			slurry SG	1.00	B	Cons	12
Classification Cyclone Cluster Specifications							
Target product size		P95	micron	20	A	Cons	10
Cyclone diameter			mm	100	A	Cons	7
Vortex diameter			mm	TBD	A	Cons	
Operating pressure			kPa	TBD	A	Cons	
	Operating -Total				A	Cons	
	Standby			TBD	A	Lyco	
	Blank ports			TBD	A	Calc	
	Total ports on cluster			TBD	A	Lyco	7

			Units		Rev	Source	Ref
Solids flow to underflow			% feed	60	B	Cons	11
Solids % in underflow			%	45	A	Cons	10
Classification Cyclone Flow Parameters							
Classification cyclone flow data	Feed		t solids/h	79	B	Cons	12
			t water/h	2,171	B	Calc	
			t slurry/h	2,206	B	Calc	
			m^3/h	2,197	B	Calc	
			% solids	3.6	B	Cons	12
			slurry SG	1.00	B	Cons	12
	Overflow		t solids/h	32	B	Calc	
			t water/h	2,113	B	Calc	
			t slurry/h	2,144	B	Calc	
			m^3/h	2,122	B	Calc	
			% solids	1	B	Calc	
			slurry SG	1.01	B	Calc	
	Underflow		t solids/h	48	B	Calc	
			t water/h	59	B	Calc	
			t slurry/h	106	B	Calc	
			m^3/h	74	B	Calc	
			% solids	45	B	Calc	
			slurry SG	1.44	B	Calc	
Coarse Tailings Pump Tank							
Number of units			tank	1	B	Cons	12
Nominated tank size	Live		m^3	71	B	Cons	7
Residence time			mins	2	B	Cons	12

6.0 FINE CONCENTRATE THICKENING

Fine concentrate from the classification cyclones will be sent to a pump tank from where it will be pumped to the fine concentrate thickener. Flocculant will be added to aid in the settling of the fine material. Overflow from the thickener will gravitate to the process water tank and thickener underflow will be pumped to the filter feed tank. B Cons

Fine Concentrate Pump Tank							
Number of units			tank	1	A	Cons	7
Nominated tank size	Live		m^3	3.5	B	Lyco	
Residence time			mins	2	A	Cons	8
Fine Concentrate Thickener							
Type				Deep Cone	A	Cons	
Floc Addition		Expected	g/t solids feed	84	B	Assumed	
		Design	g/t solids feed	96	B	Calc	
		Concentration	w/w %	100%	A	Cons	3
Feed Rate		Capacity	dry t/h	48	B	Calc	
		Design Capacity	dry t/h	57			
Feed Density			% solids	45%	B	Calc	
Diluted Feed Density			% solids	35%	B	Calc	
Underflow Density			% solids	55%	A	Cons	11
Diluted Flowrate to Thickener			m^3/h	104	B	Calc	
Net Feed Loading			m^3/m^2h	3.0	B	Cons	
Design Factor			%	20%	A	Lyco	
Thickener Size		Dia. @ operating tph	m	6.6	B	Calc	
		Selected diameter	m	8.0	B	Calc	

7.0 CONCENTRATE FILTERING & STOCKPILE

Fines concentrate from fines concentrate thickener and coarse concentrate from hydrosizers will be combined in the concentrate filter feed tank. The material will be fed to a vacuum belt filter for filtration. Filtrate will be pumped back to the process water tank. Concentrate cake will be discharged onto a concentrate conveyor that will transport the cake to the concentrate transfer conveyor feed bin. A belt feeder will extract the material and discharge it onto the concentrate transfer conveyor from where the cake will be discharged into the concentrate bin. The concentrate bin will be equipped with a discharge gate. Concentrate trucks will drive under the concentrate bin to be loaded. Once loaded, the concentrate trucks will transport the filtered concentrate to the port facility. B Cons

			Units		Rev	Source	Ref
Concentrate Filter Feed Tank							
Number of units			tank	1	A	Cons	
Nominated tank size		Live	m^3	19	B	Calc	
Residence time			mins	5	A	Lyco	
Vacuum Belt Filter							
Number of units				1	A	Lyco	
Target product moisture			%	8	A	Assumed	
Design Filtration Rate			t/m^2h	7.5	A	Assumed	
Water Requirements							
Cloth Wash			t/h	15	A	Lyco	
Vacuum Box Seal			t/h	2.5	A	Lyco	
Vacuum Pump Seal			t/h	16	A	Lyco	
Concentrate Transfer Conveyor Feed Hopper							
Capacity		Live	hrs	0.5	A	Lyco	
		Live	days	0.02	A	Calc	
			dry tonnes	83	B	Calc	
		Design	dry tonnes	85	B	Lyco	
			days	0.02	A	Calc	
Concentrate Bin Capacity							
Capacity		Live	hrs	12	A	Lyco	
		Live	days	0.5	A	Calc	
			dry tonnes	1,992	B	Calc	
		Design	dry tonnes	2,000	B	Lyco	
			days	0.5	B	Calc	

8.0 TAILINGS HANDLING

The tailings of the beneficiation plant will be comprised of classification cyclones overflow and any reagent area spills. These materials will be collected in the coarse tailings tank and will be pumped to a tailings thickener. Flocculant will be added to aid in the settling of material. Overflow from the thickener will gravitate to the process water tank and thickener underflow will be pumped to the tailings storage dam. Return water from the tailings dam will be flow by gravity back to the process water tank. — A — Lyco

Tailings Thickener							
Type				Hi-rate	B	Cons	
Floc Addition		Expected	g/t solids feed	120	B	Test	13
		Design	g/t solids feed	140	B	Calc	
		Concentration	w/w %	100%	A	Cons	3
Feed Rate		Capacity	dry t/h	32	B	Calc	
Feed Rate		Design - Capacity	dry t/h	38	B	Calc	6
Feed Density			% solids	1%	B	Calc	
Diluted Feed Density			% solids	1%	B	Calc	
Underflow Density			% solids	15%	B	Test	13
Diluted Flowrate to Thickener			m^3/h	2134	B	Calc	
Solids Loading Rate			t/m^2h	0.15	B	Test	13
Design Factor			%	20%	A	Lyco	
Thickener Size		Dia. @ operating tph	m	20	B	Calc	
		Selected diameter	m	30	B	Cons	12
Tailings Pumps							
Number of Units		Operating	Qty	2 in series	A	Cons	
		Standby	Qty	2 in series	A	Lyco	6
		Capacity	t solids/h	32	B	Cons	6
			t water/h	179	B	Cons	6
			t slurry/h	210	B	Cons	6
			m^3/h	188	B	Cons	6
			% solids	15%	A	Cons	6
			slurry SG	1.12	A	Cons	6

9.0 REAGENT SUMMARY

Fine Concentrate Thickening						
Flocculant	g/t solids feed	96	B	Calc	3	

			Units		Rev	Source	Ref
Tailings							
	Flocculant		g/t solids feed	140.0	B	Test	13
10.0 REAGENT PREPARATION AND STORAGE							
Flocculant 1							
	Type			Flomin 923 or equivalent	B	Test	13
	Delivery Packing			Bulk Bags	A	Lyco	
	Physical form			Powder	A	Assumed	
	Size		kg	25	A	Assumed	
	Mixing Concentration		w/w %	0.5%	A	Industry	
	Diluted Concentration (mixed point of discharge)		w/w %	0.05%	A	Industry	
	Mix solution specific gravity			1.00	A	Industry	
	Consumption						
	Tailings Thickener	Nominal	g/t solids feed	120	B	Assumed	
		Design	g/t solids feed	144	B	Assumed	
	Tailings Thickener	Nominal	kg/d	96	A	Calc	
		Nominal	t/d	0.10	A	Calc	
	Tailings Thickener	Nominal	m^3/h	0.80	A	Calc	
	Total Dilution water demand	Nominal	m^3/d	19	A	Calc	
			m^3/h	0.80	A	Calc	
	Mixing frequency		Batch/day	3.8	A	Calc	
			kg/batch	25	A	Industry	
	Mixing tank	Live	m^3/batch	5.0	A	Calc	
	Storage tank	Live	m^3	7.5	A	Calc	
	Storage capacity		batches	1.5	A	Lyco	
			hrs	9.4			
Flocculant 2							
	Type			Magnafloc 1011 or equivalent	A	Client	1
	Delivery Packing			Bulk Bags	A	Lyco	
	Physical form			Powder	A	Assumed	
	Size		kg	25	A	Assumed	
	Mixing Concentration		w/w %	0.5%	A	Industry	
	Diluted Concentration (mixed point of discharge)		w/w %	0.05%	A	Industry	
	Mix solution specific gravity			1.00	A	Industry	
	Consumption						
	Fine Concentrate Thickener	Nominal	g/t solids feed	84	B	Calc	
		Design	g/t solids feed	100	B	Calc	
	Fine Concentrate Thickener	Nominal	kg/d	96	A	Calc	
		Nominal	t/d	0.10	A	Calc	
	Fine Concentrate Thickener	Nominal	m^3/h	0.80	A	Calc	
		Design	m^3/h	0.96	A	Calc	
	Total Dilution water demand	Nominal	m^3/d	19	A	Calc	
			m^3/h	0.80	A	Calc	
	Mixing frequency		Batch/day	3.8	A	Calc	
			kg/batch	25	A	Industry	
	Mixing tank	Live	m^3/batch	5.0	A	Calc	
	Storage tank	Live	m^3	7.5	A	Calc	
	Storage capacity		batches	1.5	A	Lyco	
11.0 AIR							
Process Air Supply							
	Air density		kg/Nm^3	1.3	A	Industry	
	Oxygen % in Air		% w/w	23%	A	Industry	
Instrument Air Supply							
	Air density		kg/Nm^3	1.3	A	Industry	
	Oxygen % in Air		% w/w	23%	A	Industry	
	Moisture		%	<0.01%	A	Industry	

			Units		Rev	Source	Ref
12.0 WATER SYSTEMS							
Site Total Water Summary During Operations							
Raw Water Make-up			m^3/h	2.5	B	Calc	
Process Water Make-up			m^3/h	0	A	Calc	
Process Water to Water Treatment Plant			m^3/h	31	B	Calc	
Filtered Water to Process Plant			m^3/h	33	B	Calc	
Raw Water to Potable Water Treatment			m^3/h	0.8	A	Calc	
Raw Water Demand							
To Site Services			m^3/h	0.1	A	Calc	
Total Raw Water to Process		**Nominal Flow**	**m^3/h**	2.5	B	Calc	
Filtered Water to Process							
To Flocculant Preparation			m^3/h	1.6	B	Calc	
To Gland Water Pumps							
Primary Desliming Cyclone Feed Pump			m^3/h	1.7	B	Assumed	
Secondary Desliming Cyclone Feed Pump			m^3/h	1.7	B	Assumed	
Hydrosizer Feed Pumps			m^3/h	1.2	A	Assumed	
Hydrosizer Underflow Pump			m^3/h	1.2			
Classification Cyclone Feed Pumps			m^3/h	1.7	A	Assumed	
Coarse Tailings Pumps			m^3/h	1.7	A	Assumed	
Fine Concentrate Pumps			m^3/h	0.8	A	Assumed	
Fine Concentrate Thickener Recirculation Pumps			m^3/h	0.8	A	Assumed	
Fine Concentrate Thickener U/F Pumps			m^3/h	0.8	A	Assumed	
Vacuum Pump			m^3/h	18.5	A	Assumed	
Tailings Thickener U/F Pumps			m^3/h	1.5	A	Assumed	
Total Filtered Water to Process		**Nominal Flow**	**m^3/h**	33	A	Assumed	
Process Water Demand							
To Horizontal Scrubber			m^3/h	358	B	Calc	
To 5mm Reject Screen			m^3/h	355	B	Calc	
To Secondary Desliming Pump Tank			m^3/h	474	B	Calc	
To 1.18mm Reject Screen			m^3/h	84	B	Calc	
To Attrition Scrubbing			m^3/h	0	B	Calc	
To Hydrosizers			m^3/h	900	A	Calc	
To Hydrosizer U/F Dilution Tank			m^3/h	45			
To Fine Concentrate Thickener			m^3/h	8	A	Vendor	
To Tailings Thickener			m^3/h	8	A	Assumed	
Total Process Water Demand		**Average Flow**	**m^3/h**	2,232	B	Calc	
Recycle Water to Process Water Tank			m^3/h	2,263	B	Calc	
Excess Process Water to Treatment			m^3/h	31	B	Calc	
Potable Water Demand							
Number of personnel			No.	60	A	Lyco	
Domestic use		Per Head	m^3/d	0.3	A	Industry	
Total potable water consumed			m^3/h	0.8	A	Calc	
Potable Water Storage Tank							
Residence time			h	24	B	Lyco	
Live capacity			m^3	18	A	Calc	
Raw/Fire Water Storage Tank							
Raw water capacity			m^3/h	31	B	Calc	
Residence time			h	2	A	Lyco	
Live storage capacity			m^3	62	B	Calc	

			Units		Rev	Source	Ref
	Fire water pump capacity		m^3/h	72	A	Industry	
	Residence time		h	4	A	Lyco	
	Live storage capacity		m^3	288	A	Calc	
	Total Raw/Fire Water Tank Capacity		m^3	350	B	Calc	
Filtered Water Storage Tank							
	Residence time		h	2	A	Lyco	
	Live capacity		m^3	66	B	Calc	
Process Water Storage Tank							
	Residence time		mins	15	A	Lyco	
	Live capacity		m^3	558	B	Calc	
Excess Water Storage Tank							
	Residence time		h	0.5	A	Lyco	
	Live capacity		m^3	16	B	Calc	
Water Treatment Plant							
	Calculated Capacity		m^3/h	33	B	Calc	
	Treatment Method			TBD by vendor	A	Lyco	
Note: Treatment method to be determined by vendor (sand filtration, carbon contacting, clarification, pH adjustment, sterilisation)							
Services							
	Mine services	Raw water	m^3/h	5.0	A	Assumed	
		Allowance for water balance	h/day	24	A	Assumed	
		Raw water - average flow	m^3/h	0.08	A	Calc	
	Workshop	Raw water	m^3/h	1.0	A	Assumed	
		Allowance for water balance	h/day	12	A	Assumed	
		Raw water - average flow	m^3/h	0.01	A	Calc	
Sewage Septic							
	Design Capacity	Sewage	m^3/h	1.0	A	Assumed	
			m^3/day	24	A	Calc	
13.0 TAILINGS MANAGEMENT							
	Net precipitation		m^3/h	TBD	A	Client	
	Water in ore		m^3/h	48.0	B	Calc	
	Tailings from Plant		m^3/h	179	B	Calc	
	Final settled density of slimes in dam		%solids w/w	50	B	Test	14
	Water entrained in solids (volume accumulated in dam)		m^3/h	32	B	Calc	
	Net Seepage Losses from TMF		m^3/h	1.0	A	Assumed	
	TMF Excess Water		m^3/h	147	B	Calc	

14.0 PORT FEED, STOCKPILE, RECLAIM AND SHIPLOADING

Phosphate concentrate will be delivered to the Port facility in trucks. Concentrate from the trucks will dump onto the port concentrate hopper. A belt feeder will extract material from the hopper and discharge it onto the port concentrate stockpiling conveyor. A FEL will transfer material from the concentrate stockpile to the concentrate dryer feed hopper.

Phosphate concentrate will be transferred to the concentrate dryer to reduce the concentrate moisture from 8% to 3%. FELs will transport concentrate from the covered stockpile to the concentrate dryer feed hopper. The hopper will be equipped with a belt feeder to ensure a regulated feed to the rotary drum dryer. Dried concentrate will then be conveyed and stacked in a covered shed until it is time for shiploading.

When a ship is berthed, FELs will be used to transfer concentrate from the stockpiles within the storage shed into three port concentrate hoppers. Each concentrate hopper will be equipped with its own belt feeder for a regulated delivery of concentrate onto the port concentrate loadout conveyor. The port concentrate loadout conveyor will be fitted with a weightometer to accurately measure the tonnage of concentrate which is loaded for each ship. **B Lyco**

Concentrate from the loadout conveyor will be transferred onto the port concentrate shiploader. The port concentrate shiploader will be a traversing shiploader with luffing and shuttling boom, which will allow the ship to remain in one place during concentrate loading.

Dust collectors will be installed at the transfer points to prevent respirable dust from entering the work environment and minimize product loss. Collected solids will be mixed with a wetting agent in a ribbon blender before being discharged back onto the dried concentrate belt conveyor.

	Units		Rev	Source	Ref
Port Operating Schedule					
Scheduled working days	d/a	333	B	Client	
Operating hours per day	hrs	24	A	Client	
Operating hours per year	hrs	8000	A	Calc	
Total Lost Time at Berth, per ship call					
Berthing/deberting time	hrs/ship call	2.5	A	Assumed	
Loader travel time	hrs/ship call	1.5	A	Assumed	
Shift change	hrs/shift	1.0	A	Assumed	
Concentrate Characteristics					
Concentrate bulk density	t/m^3	1.35	A	Lyco	
Concentrate moisture content	%	8	A	Cons	
Concentrate angle of repose	deg	37	A	Cons	
Concentrate Export Shipment					
Shipment size	t	30,000	A	Client	
Annual number of shipments	ships/year	44	B	Calc	
Daily number of shipments	ships/day	0.13	B	Calc	
Ship lay time	h	48	A	Client	
Ship loading time	h	48	A	Calc	
Ship loading rate	t/h	630	B	Lyco	
Concentrate Delivery from Process Plant					
Truck type		Tri-axle Tipper or equivalent	A	Lyco	
Truck capacity	t	31.0	A	Vendor	
Operating Time		6:00 to 20:00	A	Lyco	
Operating hours per day	hours	14	A	Lyco	
Daily haulage Requirements	t wet	4,331	B	Calc	
Daily truck trips	trips	140	B	Calc	
Round trip time	hours	3.8	A	Client	
Trips per day per truck	trips	3	A	Lyco	
Number of trucks required in fleet	trucks	47	B	Calc	
Concentrate Stockpile Capacity					
Capacity	trucks	16	A	Lyco	
	tonnes	496	A	Calc	
	m^3	367	A	Calc	
	hrs	2.7	A	Calc	

Client	GB Minerals Ltd.	Date	24-Jul-15	Revision	B
Project	Farim Phosphate Project	Job Number	5036	Prepared	SC
Document	PROCESS DESIGN CRITERIA			Checked	IM

	Units		Rev	Source	Ref
Concentrate Reclaim					
Equipment		Front-end Loader (FEL)	A	Lyco	
Equpment model		CAT 980H or equivalent	A	Lyco	
Number of equipment		2	A	Calc	
Equipment capacity	m^3	6.9	B	Vendor	
	t/bucket	9.3	B	Calc	
Equipment Loads	min/load per FEL	4	A	Lyco	
	buckets/h per FEL	15	A	Calc	
Equipment rate	t/h per FEL	140	B	Calc	
	t/h total	279	B	Calc	
Reclaimed Concentrate Discharge		Concentrate Dryer Feed Hopper	A	Lyco	
Concentrate Drying					
Equipment		Rotary drum dryer	A	Cons	
Dryer capacity	dry t/h	166	B	Calc	
Dryer availablity	%	TBD	B	Vendor	
Dryer Design capacity	dry t/h	183	B	Vendor	
Maximum material temperature	deg. C	600	A	Cons	10
Retention time	min	10	B	Cons	
Product dishcarge temperature	deg. C	93	A	Cons	
Off-gas temperature	deg. C	105	B	Vendor	
Specific heat	kJ/kg deg. C	0.9	A	Cons	
Target product moisture	%	3.0	A	Client	
Dryer efficiency	%	70	A	Cons	
Off-Gas Treatment					
Equipment		Cyclone Dust Collector & Venturi Scrubber	A	Cons	
Dust Collector discharge solids destination		Dryer feed screw conveyor	A	Cons	
Scrubbing agent		Raw water	A	Cons	
Scrubbing agent requirement	t/h	TBD	A	Vendor	
Scrubber discharge destination		Port storm water settlement pond	A	Cons	
Scrubber off-gas destination		Stack to atmosphere	A	Cons	
Dried Concentrate Stockpile Capacity					
Capacity	shipments	2.0	A	Lyco	
	tonnes	60,000	A	Calc	
	m^3	44,444	A	Calc	
	days	14	B	Calc	
Dried Concentrate Reclaim					
Equipment		Front-end Loader (FEL)	A	Lyco	
Equpment model		CAT 980H or equivalent	A	Lyco	
Number of equipment		3	A	Calc	
Equipment capacity	m^3	6.9	B	Vendor	
	t/bucket	9.3	B	Calc	
Equipment Loads	min/load per FEL	2	A	Lyco	
	buckets/h per FEL	30	A	Calc	
Equipment rate	t/h per FEL	279	B	Calc	
	t/h total	838	B	Calc	
Reclaimed Concentrate Discharge		Port Concentrate Hoppers No.1 to No.3	A	Lyco	
Reclaimed Concentrate Loadout					
Feeder Type		Belt Feeder with VSD	A	Lyco	
Number of feeders		3	A	Lyco	
Nominal capacity - per feeder	t/h	315	A	Lyco	
Maximum capacity - per feeder	t/h	870	A	Lyco	
Nominal conveyor capacity	t/h	630	A	Lyco	
Maximum conveyor capacity	t/h	1,200	B	Lyco	

			Units		Rev	Source	Ref
Dried Concentrate Travelling Conveyor							
	Nominal shiploading rate		t/h	630	A	Lyco	
	Maximum shiploading rate		t/h	1,200	B	Lyco	
Port Concentrate Shiploader							
	Type			Wheeled, travelling shiploader with luffing w/ drop dust cowl	A	Lyco	
	Nominal shiploading rate		t/h	630	A	Lyco	
	Maximum shiploading rate		t/h	1,200	B	Lyco	
Port Concentrate Fines/Dust Treatment							
	Type			Ribbon Blender	B	Cons	
	Typical Rotary Dryer Fines Carry Over		g/m^3	23	B	Industry	
	Wetting Agent Consumption		g/t fines	500	B	Vendor	
15.0 PORT WATER SYSTEMS & SERVICES							
Site Total Water Demand							
	Raw Water	Average Flow	m^3/h	TBD	A	Calc	
		Maximum Flow	m^3/h	TBD	A	Calc	
	Treated Water	Average Flow	m^3/h	TBD	A	Calc	
		Maximum Flow	m^3/h	TBD	A	Calc	
	Total	Average Flow	m^3/h	TBD	A	Calc	
		Maximum Flow	m^3/h	TBD	A	Calc	
Raw Water Demand							
	To Truck Wash	Average Flow	m^3/h	8.3	B	Assumed	
	To Port Potable Water Plant	Average Flow	m^3/h	0.2	A	Calc	
	Total Raw Water	Average Flow	m^3/h	8	B	Calc	
Port Water Treatment Plant							
	Calculated Capacity		m^3/h	TBD	A	Calc	
	Treatment Method			TBD by vendor	A	Lyco	
Note: Treatment method to be determined by vendor (sand filtration, carbon contacting, clarification, pH adjustment, sterilisation)							
Port Potable Water Treatment Plant							
	Number of personnel		No.	15	A	Lyco	
	Domestic use	Per Head	m^3/d	0.3	A	Assumed	
	Total potable water consumed		m^3/h	0.2	A	Calc	
Port Raw Water Storage Tanks							
	No. of tanks			1	A	Lyco	
	Total residence time		h	24	A	Assumed	
	Live capacity per tank		m^3	204	A	Calc	
Port Fire Water Storage Tank							
	Fire water pump capacity		m^3/h	72	A	Industry	
	Residence time		h	4	A	Industry	
	Live storage capacity		m^3	288	A	Calc	
Port Potable Water Storage Tank							
	Residence time		h	24	A	Lyco	
	Capacity		m^3	5	A	Calc	
Port Raw Water Supply from Ponds							
	Total Raw Water Supply		m^3/h	8	B	Calc	
Services							
	Port services	Raw water	m^3/h	1.0	A	Assumed	
		Allowance for water balance	h/day	24	A	Assumed	
		Raw water - average flow	m^3/h	0.02	A	Calc	

			Units		Rev	Source	Ref
	Port Workshop & Office	Raw water	m^3/h	1.0	A	Assumed	
		Allowance for water balance	h/day	12	A	Assumed	
		Raw water - average flow	m^3/h	0.01	A	Calc	
	Sewage Septic						
	Design Capacity	Sewage	m^3/h	1.0	A	Assumed	
			m^3/day	24.0	A	Calc	
16.0 PORT AIR							
	Port Air Supply						
	Air density		kg/Nm^3	1.3	A	Industry	
	Oxygen % in Air		% w/w	23%	A	Industry	

APPENDIX 1-B5

SHIPLOADING DRAWINGS

(14 Pages)

FARIM PHOSPHATE MARINE EXPORT PROJECT
GUINEA-BISSAU

CONCEPTUAL DESIGN DRAWINGS - DIRECT LOAD OPTION

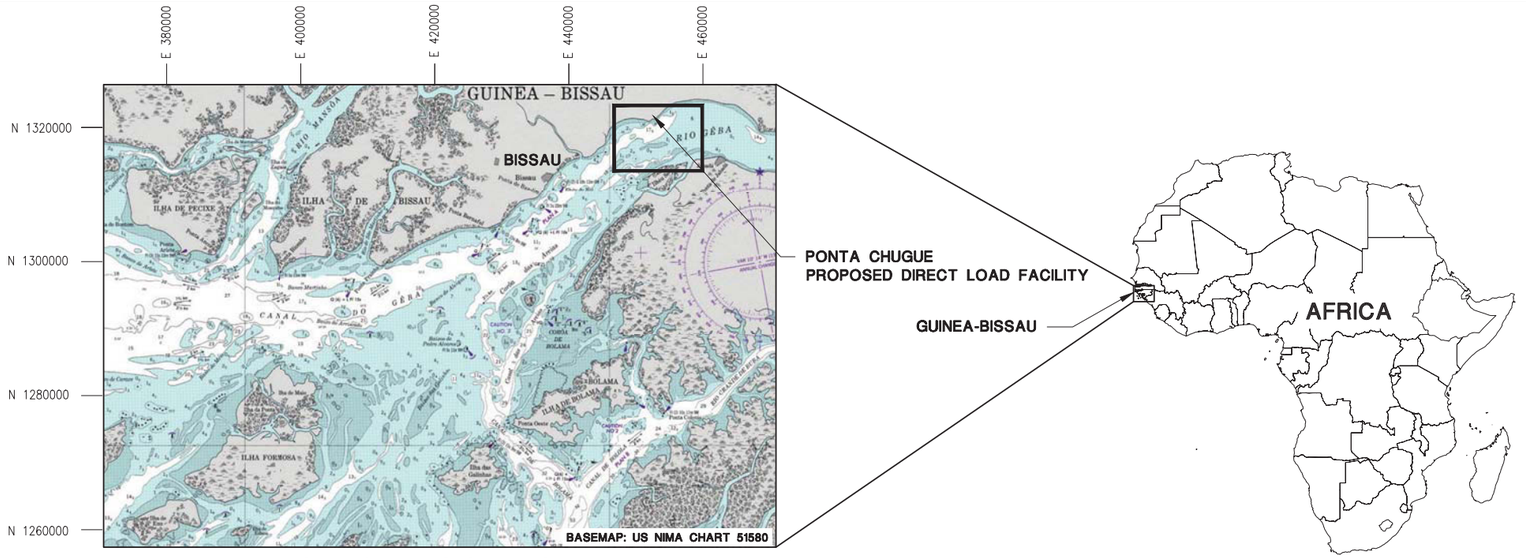

PROJECT LOCATION

Prepared By:

W.F. BAIRD & ASSOCIATES COASTAL ENGINEERS, Ltd.
1145 HUNT CLUB ROAD
OTTAWA, ONTARIO, K1V 0Y3 CANADA
TEL: +1 613 731-8900
FAX: +1 613 731-9778

LYCOPODIUM MINERALS
5060 SPECTRUM WAY, SUITE 400
TORONTO, ONTARIO, L4W 5N5 CANADA
TEL: +1 905 206-2600

Prepared For:

GB MINERALS, Ltd.
SUITE 1500 - 701 WEST GEORGIA STREET
VANCOUVER, BRITISH COLUMBIA V7Y 1C6
TEL: +1 604 569-0721
FAX: +1 604 601-3443

-CONCEPTUAL-
NOT FOR CONSTRUCTION

DATE: 12-FEB-2015
Baird Drawing Number: 11954-CD-100

DRAWING INDEX:

TITLE

DRAWING NUMBER:	REVISION NUMBER:	DRAWING TITLE:
11954-CD-100	A	TITLE SHEET
11954-CD-110	A	DRAWING LIST AND GENERAL NOTES
11954-CD-120	A	NO DREDGE OPTION - OVERALL PLAN
11954-CD-130	A	NO DREDGE OPTION - PLAN
11954-CD-140	A	WHARF PLAN
11954-CD-150	A	WHARF SECTION
11954-CD-155	A	SHIP LOADER PLATFORM DETAILS
11954-CD-160	A	SHIP LOADER TRACK PLATFORM DETAILS
11954-CD-170	A	MOORING AND BERTHING DOLPHIN DETAILS
11954-CD-180	A	FLOATING TUG DOCK - PLAN/PROFILE
11954-CD-190	A	FLOATING TUG DOCK - DETAILS
11954-CD-200	A	TRESTLE SUPPORT DETAILS
11954-CD-210	A	PILE EMBEDMENT ALTERNATIVES
11954-CD-220	A	AIDS TO NAVIGATION

GENERAL NOTES:

1. LANDSIDE CONTOURS FROM AERIAL SURVEY PERFORMED ON 23-26 NOVEMBER 2011 BY AOC/GLOBAL GEOMATICS.
2. HORIZONTAL PROJECTION = UTM ZONE 28N
3. LANDSIDE VERTICAL DATUM = EGM 2008
4. THE BERTH ALIGNMENTS SHOWN ARE BASED ON MODEL RESULTS.
5. BATHYMETRY CONTOURS AND LEVELS ARE IN CHART DATUM (APPROXIMATELY LAT).
6. BATHYMETRY CONTOURS AT PONTE CHUGUE FROM MARCH 2012 HYDROGRAPHIC SURVEY PERFORMED BY COASTAL CONSULTING & EXPLORATION S.R.L.
7. SEE DATUM KEY FOR CONVERSION BETWEEN LAND DATUM AND CHART DATUM AT PONTE CHUGUE (CD).
8. IMAGERY SOURCE IS BING MAPS, IMAGE ACQUIRED IN DECEMBER 2014.
9. FOUNDATION DESIGN BASED UPON ASSUMED SOIL PROPERTIES AND SUBSURFACE CONDITIONS. OFFSHORE BORINGS TO BE TAKEN IN FUTURE PHASES.
10. AIDS TO NAVIGATION BASED ON ASSUMED CONDITIONS. CONDITIONS OF EXISTING ATONS ARE TO BE INVESTIGATED IN FUTURE PHASES.

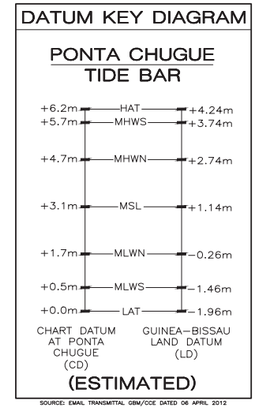

-CONCEPTUAL-
NOT FOR CONSTRUCTION

REV.	T.I.	DESCRIPTION	DRN	DSN	APR	DATE
B	A	DESIGN EDITS - DRAFT - NOT FOR CONSTRUCTION	BJR	CMM	EAL	XX-OCT-15
A	A	DRAFT - NOT FOR CONSTRUCTION	BJR	CMM	EAL	02-OCT-15

REVISIONS

T.I. TYPE OF ISSUE: (A) PRELIMINARY (B) FOR REVIEW (C) FOR APPROVAL (D) FOR INFORMATION (E) CONTRACT DOCUMENT (F) FOR CONSTRUCTION (G) AS BUILT (H) CANCELLED

PREPARED FOR: GBMINERALS

PREPARED BY: Baird — W.F. Baird & Associates Coastal Engineers Ltd.

In association with: Lycopodium

FARIM PHOSPHATE MARINE EXPORT PROJECT

DRAWING INDEX
GENERAL NOTES

DRAWING: 11954 — CD — 110 | REV: B | DATE: 12-FEB-2015

P:\11954-300 FARIM BARGE TRANSHIPPING\M - CAD\WORKING DRAWINGS\01 PHASE\DWG\DIRECT LOAD REV-B\110 - INDEX.DWG

Date Plotted: 2/12/2015 12:59:02 PM

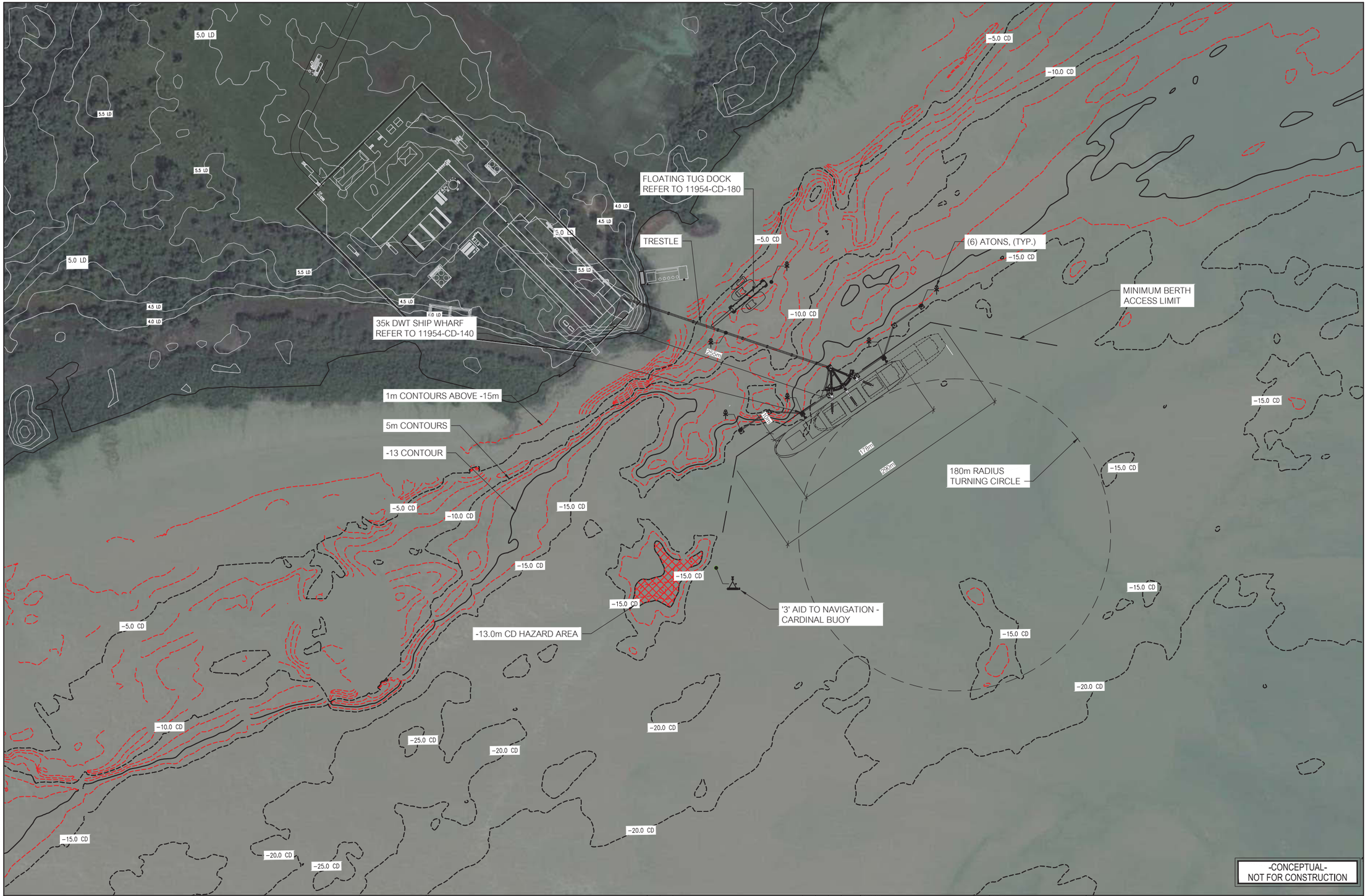

NORTH

0 20 40 80
GRAPHIC SCALE METRES
1:2000 (A1)

REV	T.I.	DESCRIPTION	DRN	DSN	APR	DATE
B	A	DESIGN EDITS - DRAFT - NOT FOR CONSTRUCTION	BJR	BTS	EAL	XX-XX-15
A	A	DRAFT - NOT FOR CONSTRUCTION	BJR	BTS	EAL	XX-XX-15

REVISIONS

T.I. TYPE OF ISSUE: (A) PRELIMINARY (B) FOR REVIEW (C) FOR APPROVAL (D) FOR INFORMATION (E) CONTRACT DOCUMENT (F) FOR CONSTRUCTION (G) AS BUILT (H) CANCELLED

PREPARED FOR: GBMINERALS

PREPARED BY: Baird — W.F. Baird & Associates Coastal Engineers Ltd.

IN ASSOCIATION WITH: Lycopodium

FARIM PHOSPHATE MARINE EXPORT PROJECT

NO DREDGE OPTION - OVERALL PLAN

DRAWING: 11954 — CD — 120 | REV: B | DATE: 12-FEB-2015

P:\11954-300 FARIM BARGE TRANSHIPPING\M - CAD\WORKING DRAWINGS\01 PHASE\DWG\DIRECT LOAD REV-B\120 - POINTE CHAGE SHIP NO DREDGE.DWG

Date Plotted: 2/12/2015 12:59:17 PM

RAMP

BARGE AT LANDING AREA

FLOATING TUG DOCK
REFER TO 01/180

FLOATING TUG DOCK
ACCESS GANGWAY
REFER TO 02/180

(6) ATONS, (TYP.)

TRESTLE

TRESTLE SUPPORT PILES
REFER TO 01/200

MINIMUM BERTH
ACCESS LIMIT

ATONS

APPROXIMATE
SHORELINE

SHIPLOADER TRACK PLATFORM
REFER TO 01/160

BERTHING DOLPHIN
REFER TO 02/170

35k DWT BULK
VESSEL SHOWN

MOORING DOLPHIN
REFER TO 01/170

178m

291m

180m RADIUS
TURNING CIRCLE

45°0'

AID TO NAVIGATION -
CARDINAL BUOY

HAZARD AREA
SHALLOWER
THAN -13.0m CD

-CONCEPTUAL-
NOT FOR CONSTRUCTION

NORTH

GRAPHIC SCALE METRES
1:1000 (A1)

REV	TJ	DESCRIPTION	DRN	DSN	APR	DATE
B	A	DESIGN EDITS • DRAFT • NOT FOR CONSTRUCTION	BJR	CMM	EAL	12-02-15
A	A	DRAFT • NOT FOR CONSTRUCTION	BJR	CMM	EAL	10-01-15

REVISIONS

TYPE OF ISSUE: (A) PRELIMINARY (B) FOR REVIEW (C) FOR APPROVAL (D) FOR INFORMATION (E) CONTRACT DOCUMENT (F) FOR CONSTRUCTION (G) AS BUILT (H) CANCELLED

PREPARED FOR: GBMINERALS

PREPARED BY: Baird — W.F. Baird & Associates Coastal Engineers Ltd. — In association with: Lycopodium

FARIM PHOSPHATE MARINE EXPORT PROJECT

NO DREDGE OPTION - PLAN

DRAWING: 11954 — CD — 130 | REV: B | DATE: 12-FEB-2015

P:\11954-300 FARIM BARGE TRANSHIPPING\VI - CAD\WORKING DRAWINGS\01 PHASE\DWG\DIRECT LOAD REV-B\130 - POINTE CHAUSE SHIP NO DREDGE ZOOM.DWG

Date Plotted: 2/12/2015 12:59:30 PM

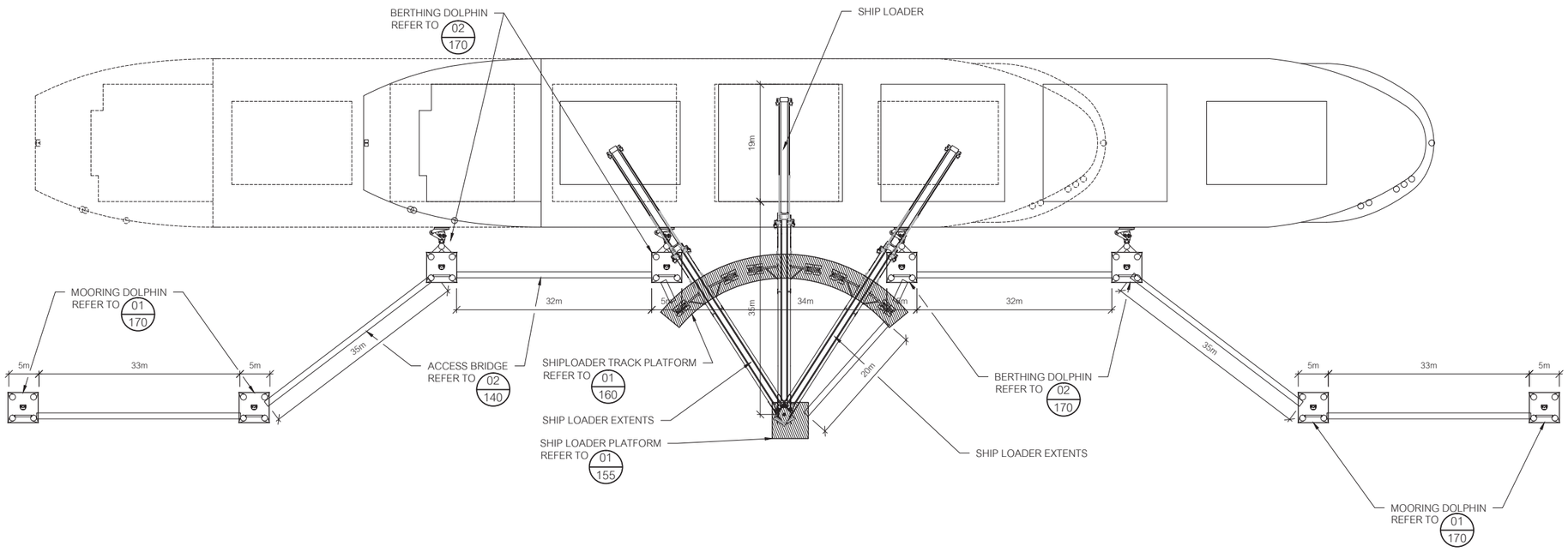

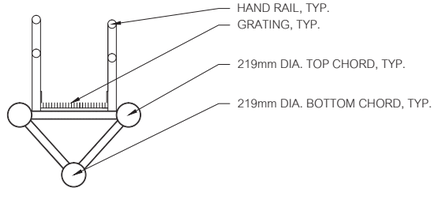

01 / 140|130 WHARF PLAN

02 / 140|140 ACCESS BRIDGE

-CONCEPTUAL-
NOT FOR CONSTRUCTION

GRAPHIC SCALE METRES
1:400 (A1)

REV	T.I.	DESCRIPTION	DRN	DSN	APR	DATE
B	A	DESIGN EDITS - DRAFT - NOT FOR CONSTRUCTION	BJR	CMM	EAL	30/01/15
A	A	DRAFT - NOT FOR CONSTRUCTION	BJR	CMM	EAL	02/01/15

REVISIONS

T.I. TYPE OF ISSUE: (A) PRELIMINARY (B) FOR REVIEW (C) FOR APPROVAL (D) FOR INFORMATION (E) CONTRACT DOCUMENT (F) FOR CONSTRUCTION (G) AS BUILT (H) CANCELLED

PREPARED FOR: GBMINERALS

PREPARED BY: Baird — W.F. Baird & Associates Coastal Engineers Ltd.
ASSOCIATED WITH: Lycopodium

FARIM PHOSPHATE MARINE EXPORT PROJECT

WHARF PLAN

DRAWING: 11954 — CD — 140 | REV: B | DATE: 12-FEB-2015

P:\11954.300 FARIM BARGE TRANSHIPPING\VI - CAD\WORKING DRAWINGS\01 PHASE_1(WO)\DIRECT LOAD REV-B\140 - WHARF PLANLING

Date Plotted: 2/12/2015 12:59:38 PM

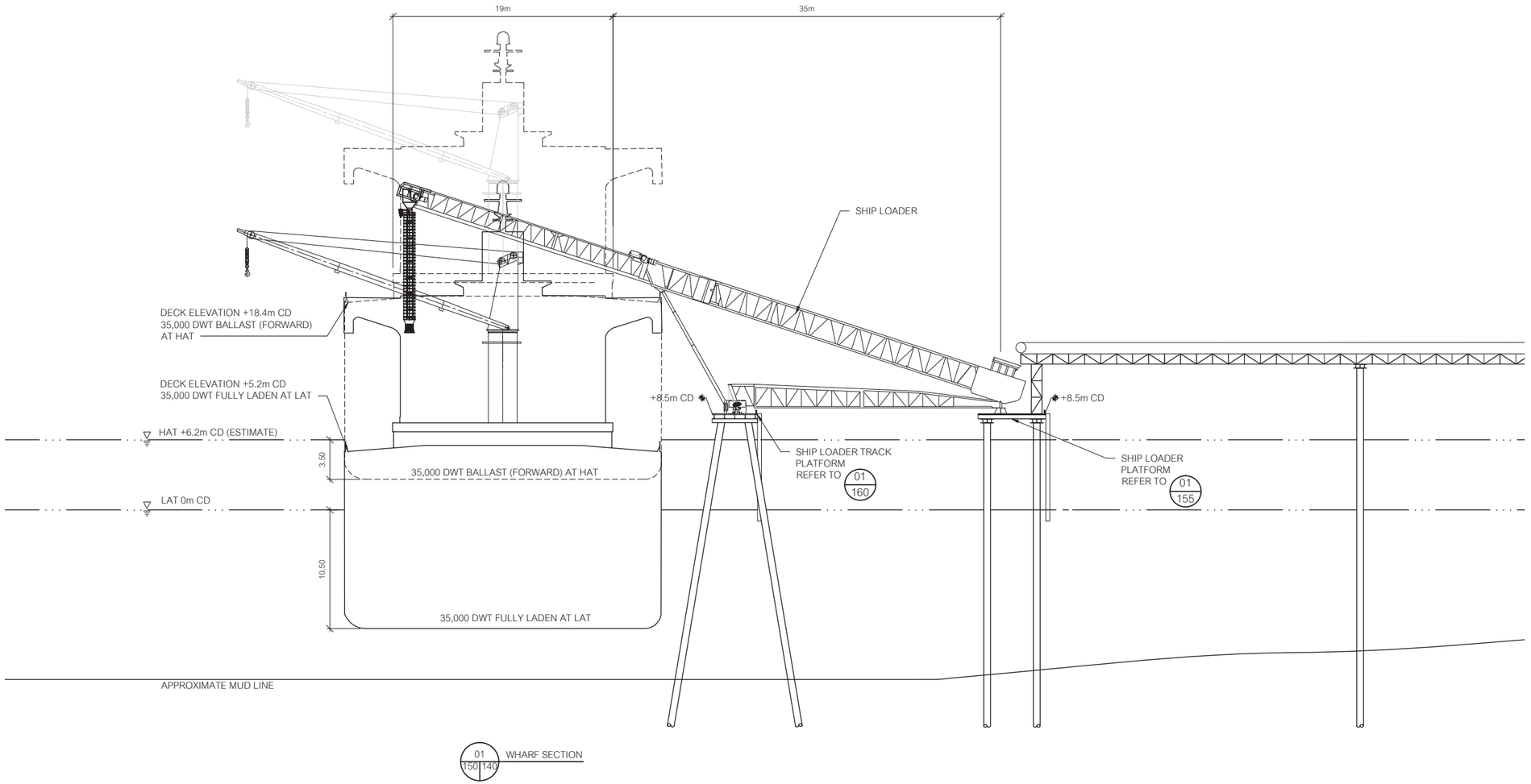

01/150|140 WHARF SECTION

-CONCEPTUAL-
NOT FOR CONSTRUCTION

GRAPHIC SCALE METRES
1:200 (A1)

REV	T.I.	DESCRIPTION	DRN	DSN	APR	DATE
B	A	DESIGN EDITS - DRAFT - NOT FOR CONSTRUCTION	BJR	CMM	EAL	30/01/15
A	A	DRAFT - NOT FOR CONSTRUCTION	BJR	CMM	EAL	02/01/15

REVISIONS

T.I. TYPE OF ISSUE: (A) PRELIMINARY (B) FOR REVIEW (C) FOR APPROVAL (D) FOR INFORMATION (E) CONTRACT DOCUMENT (F) FOR CONSTRUCTION (G) AS BUILT (H) CANCELLED

PREPARED FOR: GBMINERALS

PREPARED BY: Baird — W.F. Baird & Associates Coastal Engineers Ltd. — IN ASSOCIATION WITH: Lycopodium

FARIM PHOSPHATE MARINE EXPORT PROJECT

PROFILE THROUGH WHARF AND SHIP LOADER

DRAWING: 11954 — CD — 150 | REV: B | DATE: 12-FEB-2015

P:\11954-300 FARM BARGE TRANSHIPPING\H - CAD\WORKING DRAWINGS\01 PHASE\DWG\DIRECT LOAD REV-B\150 - WHARF SECTIONALONG

Date Plotted: 2/12/2015 12:59:43 PM

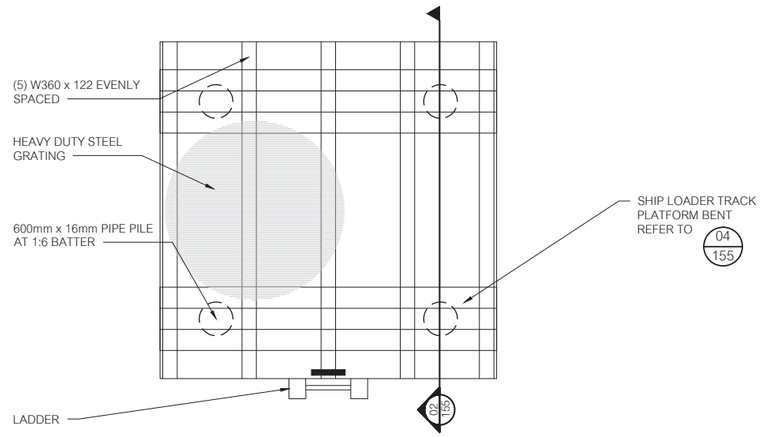

01 155 140 SHIP LOADER TRACK PLATFORM - PLAN
1:500

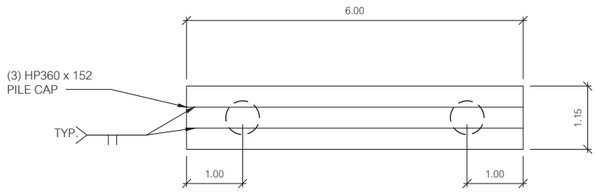

PLAN

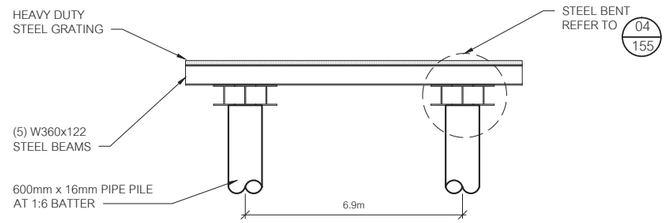

02 155 155 SHIP LOADER TRACK PLATFORM - SECTION
1:500

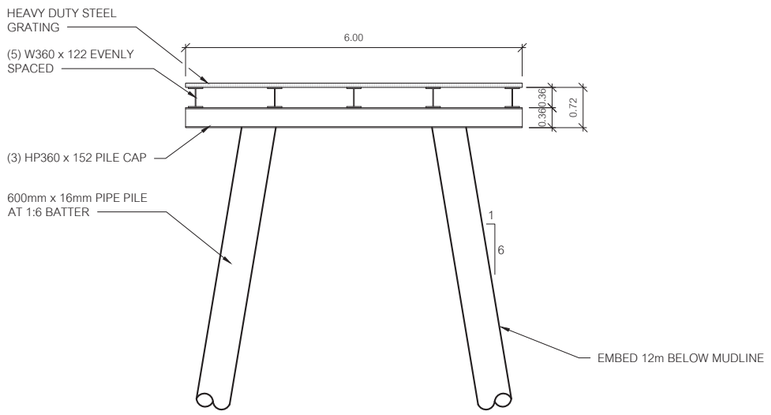

ELEVATION

03 155 155 SHIP LOADER TRACK PLATFORM BENT
1:500

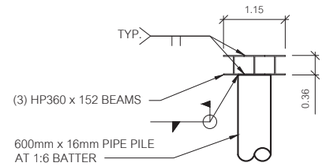

04 155 155 SHIP LOADER TRACK PLATFORM BENT - SECTION
1:500

-CONCEPTUAL-
NOT FOR CONSTRUCTION

0 500 1000 2000
GRAPHIC SCALE MILLIMETRES
1:500 (A1)

REV	TJ	DESCRIPTION	DRN	DSN	APR	DATE
B	A	DESIGN EDITS • DRAFT • NOT FOR CONSTRUCTION	BJR	CMM	EAL	XX-01-15
A	A	DRAFT • NOT FOR CONSTRUCTION BJR	BJR	CMM	EAL	02-01-15

REVISIONS

TYPE OF ISSUE: (A) PRELIMINARY (B) FOR REVIEW (C) FOR APPROVAL (D) FOR INFORMATION (E) CONTRACT DOCUMENT (F) FOR CONSTRUCTION (G) AS BUILT (H) CANCELLED

PREPARED FOR: GBMINERALS

PREPARED BY: Baird — W.F. Baird & Associates Coastal Engineers Ltd.
IN ASSOCIATION WITH: Lycopodium

FARIM PHOSPHATE MARINE EXPORT PROJECT

SHIP LOADER PLATFORM DETAILS

DRAWING: 11954 — CD — 155 | REV: B | DATE: 12-FEB-2015

P:\11954.300 FARIM BARGE TRANSHIPPING\VI - CADD\WORKING DRAWINGS\01 PHASE\DWG\DIRECT LOAD REV-B\155 - SHIPLOADER PLATFORM.DWG

Date Plotted: 2/12/2015 12:59:47 PM

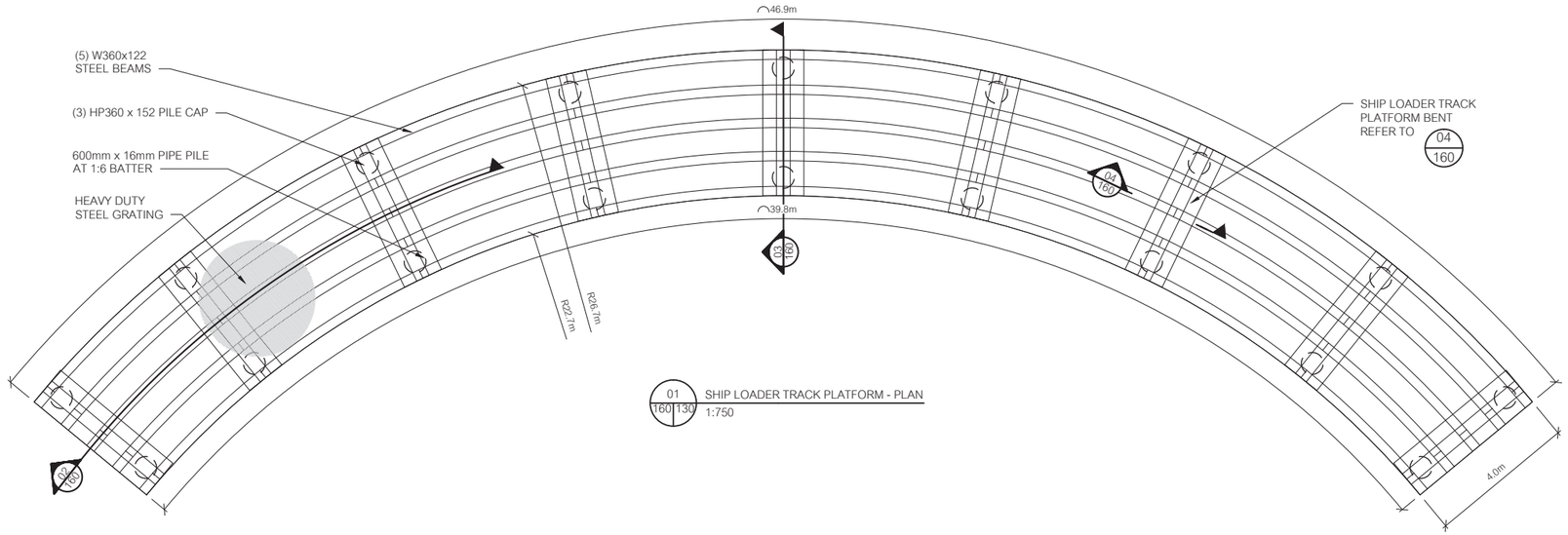

01 160|130 SHIP LOADER TRACK PLATFORM - PLAN
1:750

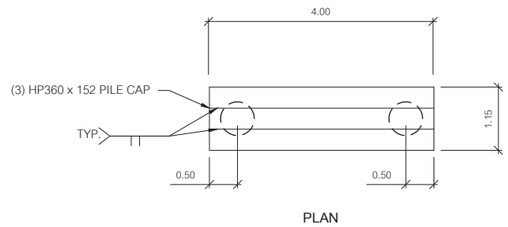

PLAN

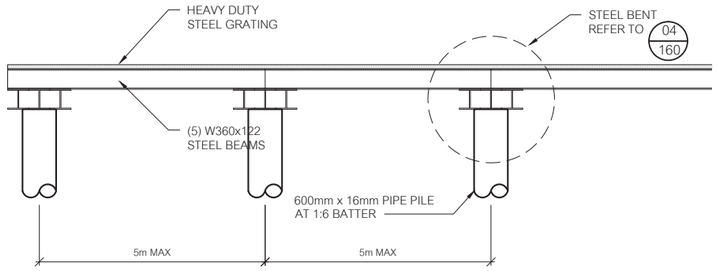

02 160|160 SHIP LOADER TRACK PLATFORM - SECTION
1:500

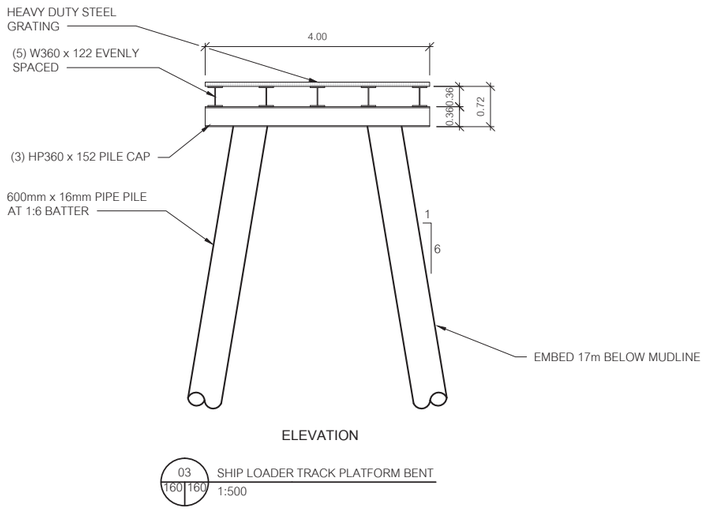

ELEVATION

03 160|160 SHIP LOADER TRACK PLATFORM BENT
1:500

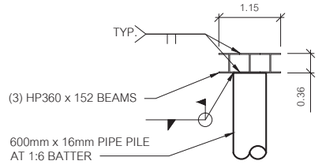

04 160|160 SHIP LOADER TRACK PLATFORM BENT - SECTION
1:500

-CONCEPTUAL-
NOT FOR CONSTRUCTION

0 500 1000 2000
GRAPHIC SCALE MILLIMETRES
1:500 (A1)

0 750 1500 3000
GRAPHIC SCALE MILLIMETRES
1:750 (A1)

REV	T.I.	DESCRIPTION	DRN	DSN	APR	DATE
B	A	DESIGN EDITS - DRAFT - NOT FOR CONSTRUCTION	BJR	CMM	EAL	XX-01-15
A	A	DRAFT - NOT FOR CONSTRUCTION BJR	BJR	CMM	EAL	09-01-15

REVISIONS

T.I. TYPE OF ISSUE: (A) PRELIMINARY (B) FOR REVIEW (C) FOR APPROVAL (D) FOR INFORMATION (E) CONTRACT DOCUMENT (F) FOR CONSTRUCTION (G) AS BUILT (H) CANCELLED

PREPARED FOR: GBMINERALS

PREPARED BY: Baird — W.F. Baird & Associates Coastal Engineers Ltd. — In association with: Lycopodium

FARIM PHOSPHATE MARINE EXPORT PROJECT

SHIP LOADER TRACK PLATFORM DETAILS

DRAWING: 11954 — CD — 160 | REV: B | DATE: 12-FEB-2015

P:\11954-300 FARIM BARGE TRANSHIPPING\VI - CAD\WORKING DRAWINGS\01 PHASE\DWG\DIRECT LOAD REV-B\160 - SHIPLOADER TRACK PLATFORM.DWG

Date Plotted: 2/12/2015 12:59:52 PM

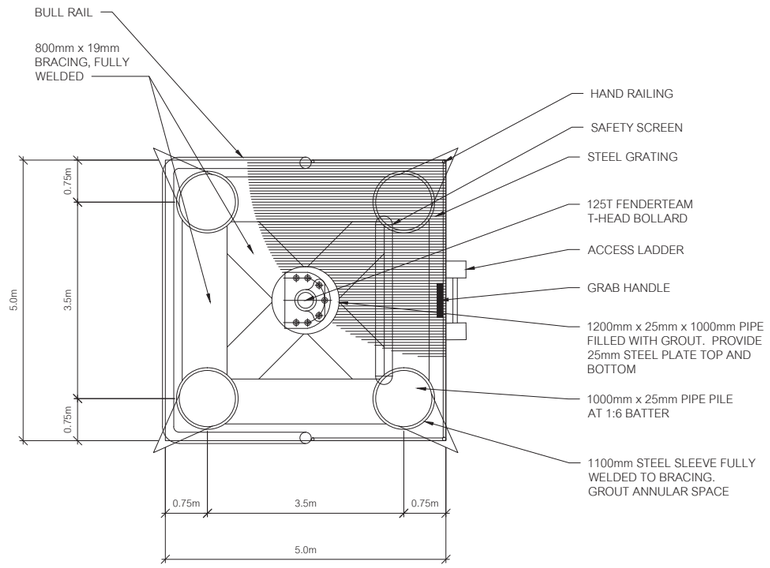

PLAN

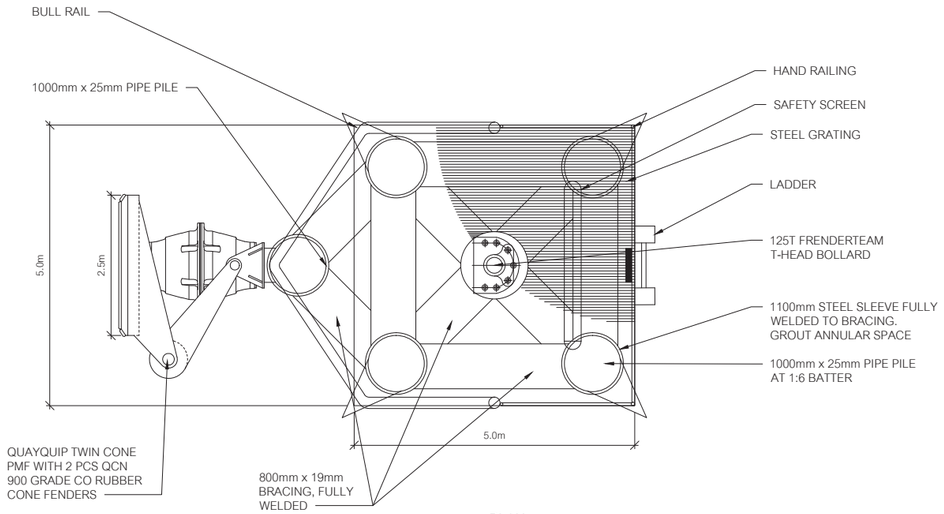

PLAN

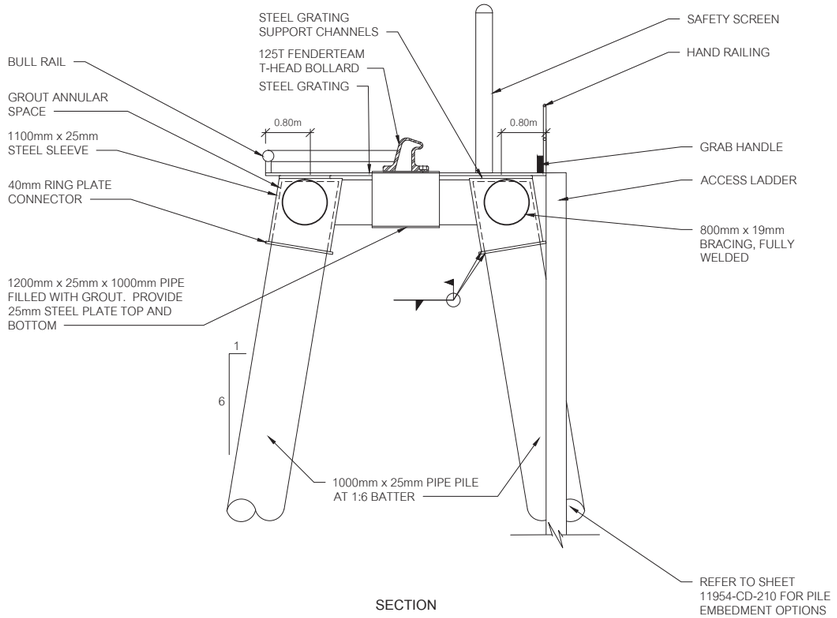

SECTION

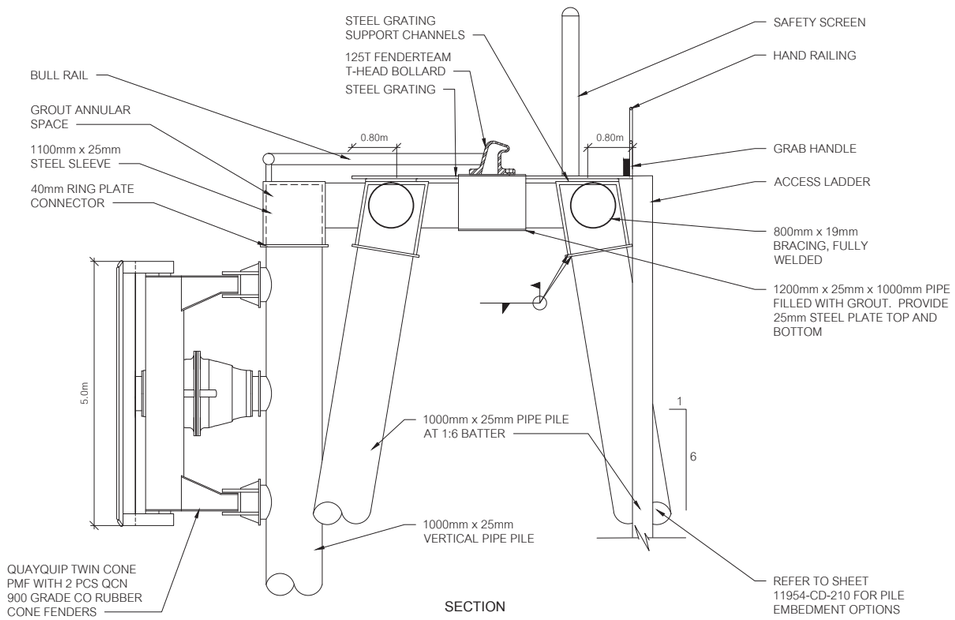

SECTION

01 170 130 MOORING DOLPHIN

02 210 130 BERTHING DOLPHIN

-CONCEPTUAL-
NOT FOR CONSTRUCTION

GRAPHIC SCALE MILLIMETRES 1:500 (A1)

REV	T.I.	DESCRIPTION	DRN	DSN	APR	DATE
B	A	DESIGN EDITS • DRAFT • NOT FOR CONSTRUCTION	BJR	CMM	EAL	03/07/15
A	A	DRAFT • NOT FOR CONSTRUCTION	BJR	CMM	EAL	02/07/15

REVISIONS

TYPE OF ISSUE: (A) PRELIMINARY (B) FOR REVIEW (C) FOR APPROVAL (D) FOR INFORMATION (E) CONTRACT DOCUMENT (F) FOR CONSTRUCTION (G) AS BUILT (H) CANCELLED

PREPARED FOR: GBMINERALS

PREPARED BY: Baird — W.F. Baird & Associates Coastal Engineers Ltd. (An Associate of AMEC plc.) — Lycopodium

FARIM PHOSPHATE MARINE EXPORT PROJECT

MOORING AND BERTHING DOLPHIN DETAILS

DRAWING: 11954 — CD — 170 | REV: B | DATE: 12-FEB-2015

P:\11954-300 FARIM BARGE TRANSHIPPING\H - CADD\WORKING DRAWINGS\01 PHASE\DWG\DIRECT LOAD REV-B\170 - DOLPHIN DETAILS.DWG

Date Plotted: 3/2/2015 4:55:55 PM

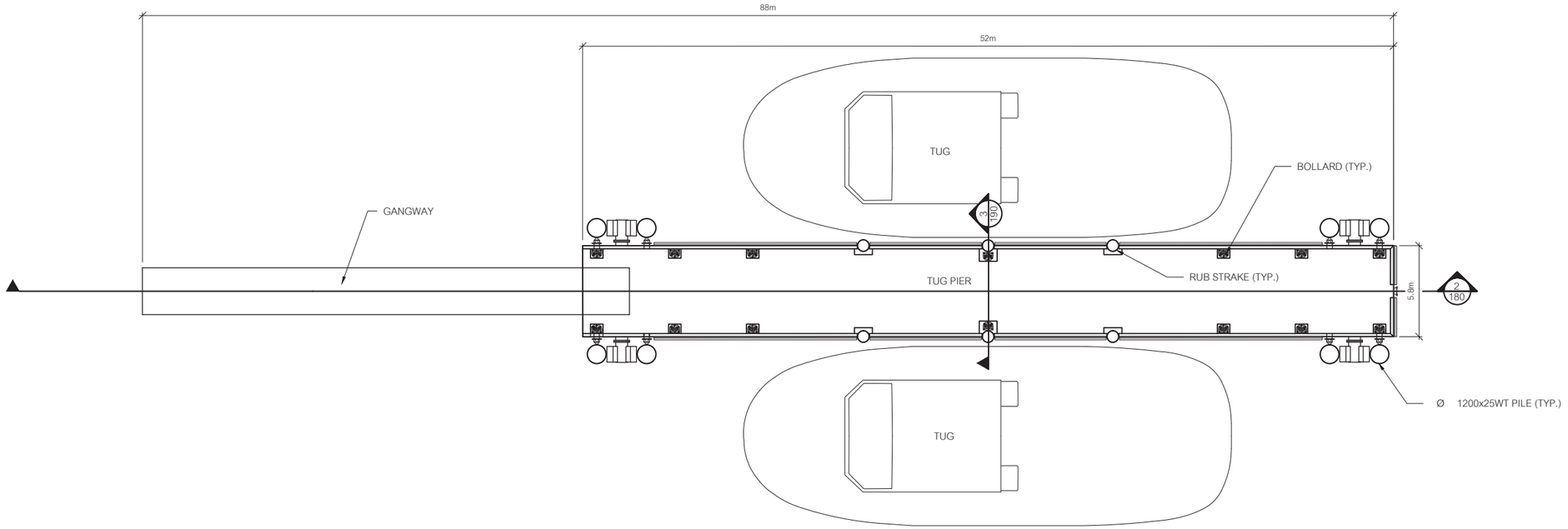

01 180 140 FLOATING TUG PIER - PLAN

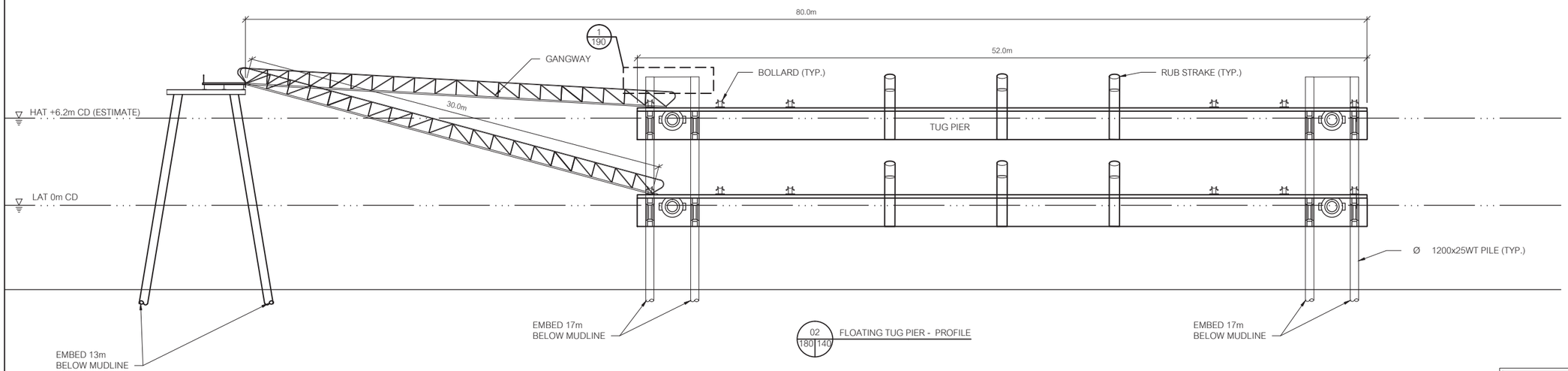

02 180 140 FLOATING TUG PIER - PROFILE

-CONCEPTUAL-
NOT FOR CONSTRUCTION

GRAPHIC SCALE METRES
1:200 (A1)

REV	T.I.	DESCRIPTION	DRN	DSN	APR	DATE
B	A	DESIGN EDITS • DRAFT • NOT FOR CONSTRUCTION	JLH	CMM	EAL	09-01-15
A	A	DRAFT • NOT FOR CONSTRUCTION	BJR	CMM	EAL	09-01-15

REVISIONS

T.I. TYPE OF ISSUE: (A) PRELIMINARY (B) FOR REVIEW (C) FOR APPROVAL (D) FOR INFORMATION (E) CONTRACT DOCUMENT (F) FOR CONSTRUCTION (G) AS BUILT (H) CANCELLED

PREPARED FOR: GBMINERALS

PREPARED BY: Baird — W.F. Baird & Associates Coastal Engineers Ltd.
ASSOCIATED WITH: Lycopodium

FARIM PHOSPHATE MARINE EXPORT PROJECT

FLOATING TUG DOCK - PLAN/ PROFILE

DRAWING: 11954 — CD — 180 | REV: B | DATE: 12-FEB-2015

P:\11954-300 FARIM BARGE TRANSHIPPING\VI - CAD\WORKING DRAWINGS\01 PHASE\DWG\DIRECT LOAD REV-B\180 - TUG PIER.DWG

Date Plotted: 2/12/2015 1:00:02 PM

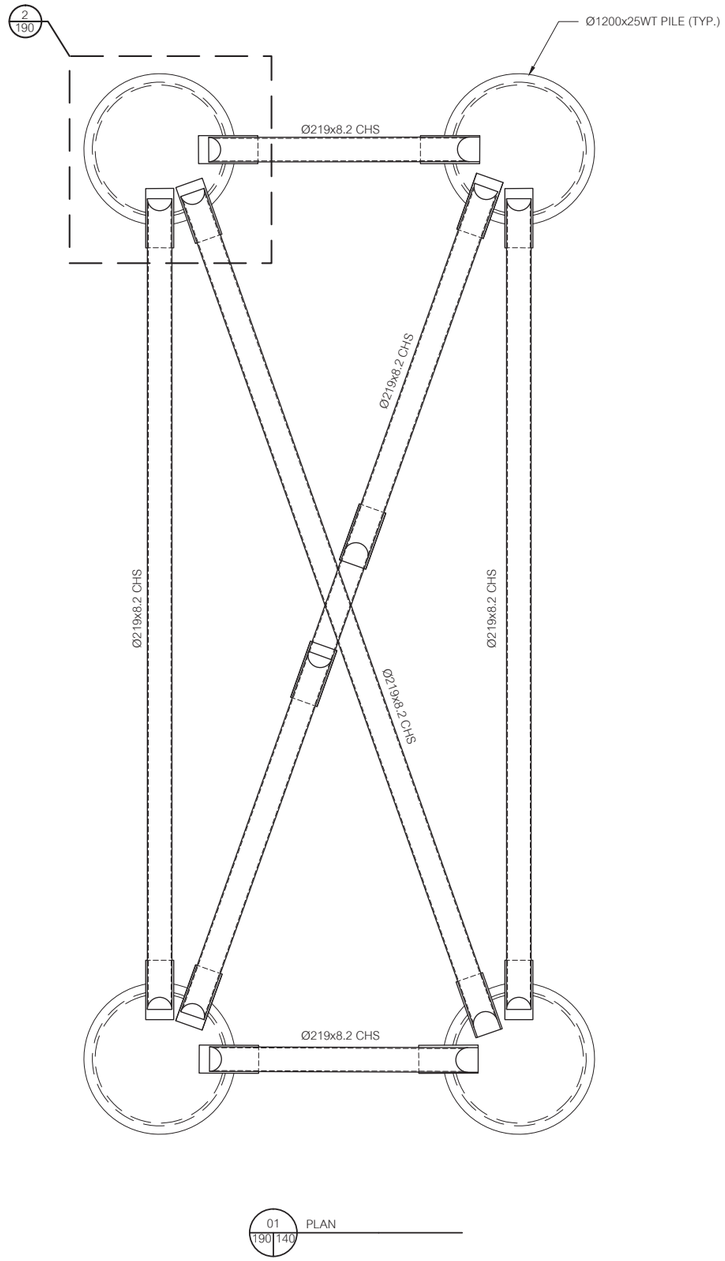

01 190 140 PLAN

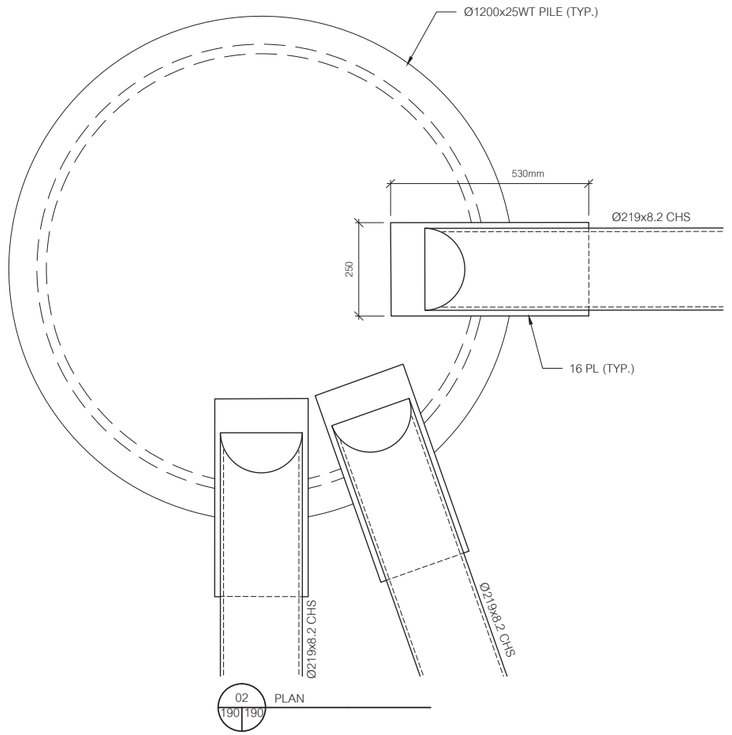

02 190 190 PLAN

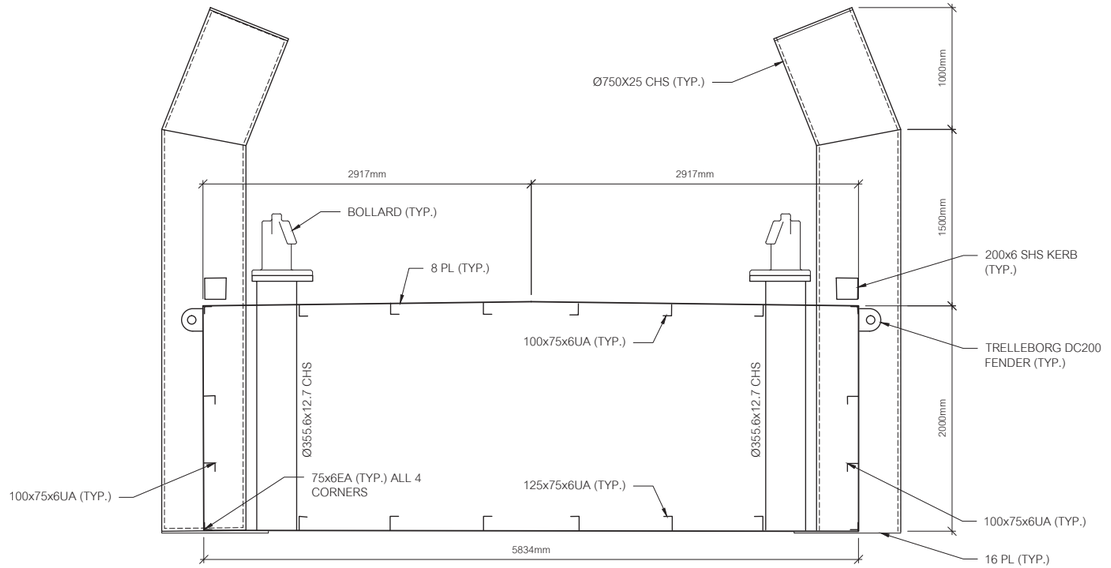

03 190 190 SECTION

-CONCEPTUAL-
NOT FOR CONSTRUCTION

GRAPHIC SCALE METRES
1:200 (A1)

REV	T.I.	DESCRIPTION	DRN	DSN	APR	DATE
REVISIONS						
B	A	DESIGN EDITS • DRAFT • NOT FOR CONSTRUCTION	JLH	CMM	EAL	XX-0-15
A	A	DRAFT • NOT FOR CONSTRUCTION	BJR	CMM	EAL	12-0-15

TYPE OF ISSUE: (A) PRELIMINARY (B) FOR REVIEW (C) FOR APPROVAL (D) FOR INFORMATION (E) CONTRACT DOCUMENT (F) FOR CONSTRUCTION (G) AS BUILT (H) CANCELLED

PREPARED FOR: GBMINERALS

PREPARED BY: Baird — W.F. Baird & Associates Coastal Engineers Ltd.
IN ASSOCIATION WITH: Lycopodium

FARIM PHOSPHATE MARINE EXPORT PROJECT

FLOATING TUG DOCK - DETAILS

DRAWING: 11954 — CD — 180 | REV: B | DATE: 12-FEB-2015

P:\11954-300 FARIM BARGE TRANSHIPPING\Vi - CADD\WORKING DRAWINGS\01 PHASE\DWG\DIRECT LOAD REV-B\190 - TUG PIER DETAILS.DWG

Date Plotted: 2/12/2015 1:00:07 PM

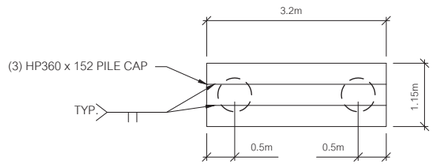

PLAN

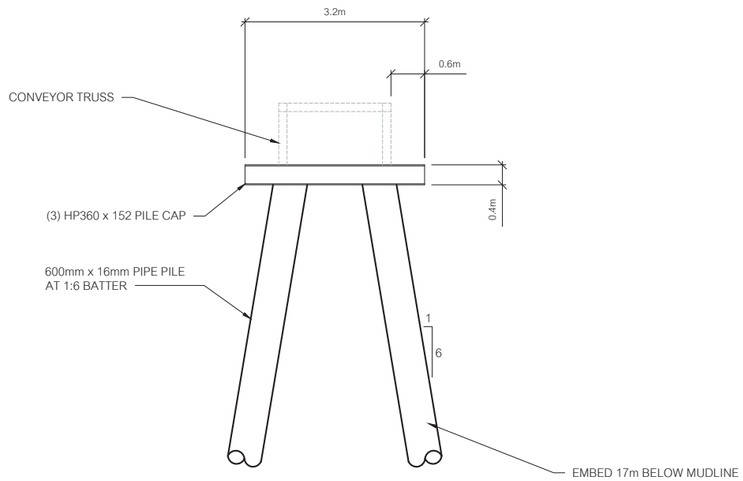

ELEVATION

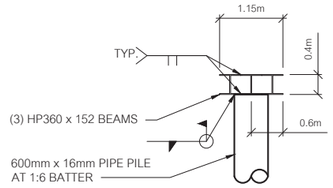

01 200 130 TYPICAL TRESTLE SUPPORT BENT

02 200 200 TRESTLE SUPPORT BENT - SECTION

-CONCEPTUAL-
NOT FOR CONSTRUCTION

0 500 1000 2000
GRAPHIC SCALE MILLIMETRES
1:500 (A1)

REV	T.I.	DESCRIPTION	DRN	DSN	APR	DATE
B	A	DESIGN EDITS + DRAFT + NOT FOR CONSTRUCTION	BJR	CMM	EAL	30-01-15
A	A	DRAFT + NOT FOR CONSTRUCTION	BJR	CMM	EAL	02-01-15

REVISIONS

TYPE OF ISSUE: (A) PRELIMINARY (B) FOR REVIEW (C) FOR APPROVAL (D) FOR INFORMATION (E) CONTRACT DOCUMENT (F) FOR CONSTRUCTION (G) AS BUILT (H) CANCELLED

PREPARED FOR: GBMINERALS

PREPARED BY: Baird — W.F. Baird & Associates Coastal Engineers Ltd. — In association with: Lycopodium

FARIM PHOSPHATE MARINE EXPORT PROJECT

TRESTLE SUPPORT DETAILS

DRAWING: 11954 — CD — 200 | REV: B | DATE: 12-FEB-2015

P:\11954-300 FARIM BARGE TRANSHIPPING\H - CADD\WORKING DRAWINGS\01 PHASE\DWG\DIRECT LOAD REV-B\200 - BENTS.DWG

Date Plotted: 2/12/2015 1:00:12 PM

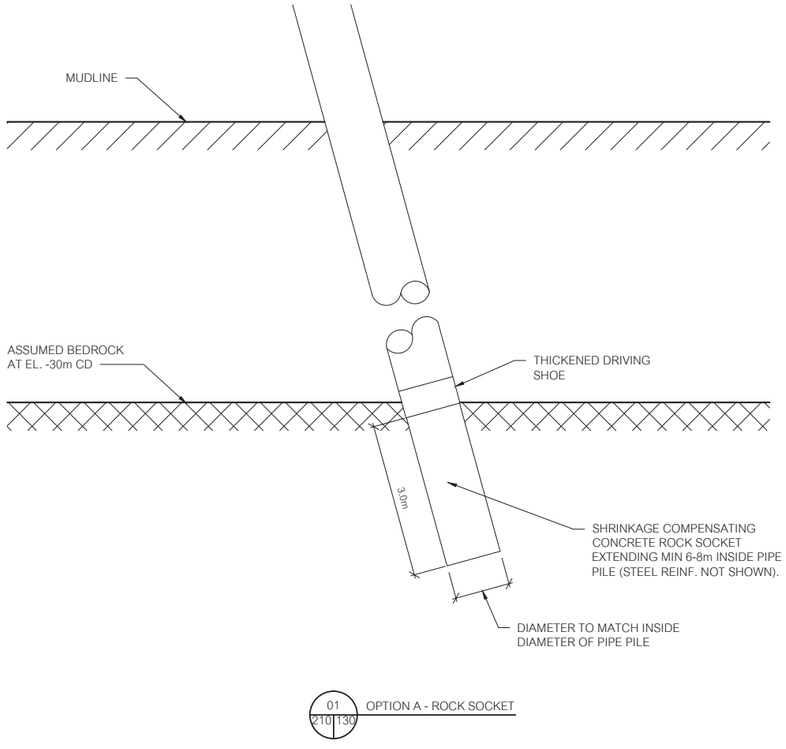

01
210|130 OPTION A - ROCK SOCKET

-CONCEPTUAL-
NOT FOR CONSTRUCTION

0 500 1000 2000
GRAPHIC SCALE MILLIMETRES
1:500 (A1)

REV	T.I.	DESCRIPTION	DRN	DSN	APR	DATE
B	A	DESIGN EDITS - DRAFT - NOT FOR CONSTRUCTION	BJR	CMM	EAL	30-01-15
A	A	DRAFT - NOT FOR CONSTRUCTION	BJR	CMM	EAL	09-01-15

REVISIONS

T.I. TYPE OF ISSUE: (A) PRELIMINARY (B) FOR REVIEW (C) FOR APPROVAL (D) FOR INFORMATION (E) CONTRACT DOCUMENT (F) FOR CONSTRUCTION (G) AS BUILT (H) CANCELLED

PREPARED FOR: GBMINERALS

PREPARED BY: Baird
W.F. Baird & Associates
Coastal Engineers Ltd.
ASSOCIATED WITH: Lycopodium

FARIM PHOSPHATE MARINE EXPORT PROJECT

PILE EMBEDMENT ALTERNATIVES

DRAWING: 11954 — CD — 210 | REV: B | DATE: 12-FEB-2015

P:\11954-300 FARIM BARGE TRANSHIPPING\VI - CAD\WORKING DRAWINGS\01 PHASE_LOW\DIRECT LOAD REV-B\210 - PILE EMBEDMENT.DWG

Date Plotted: 2/12/2015 1:00:17 PM

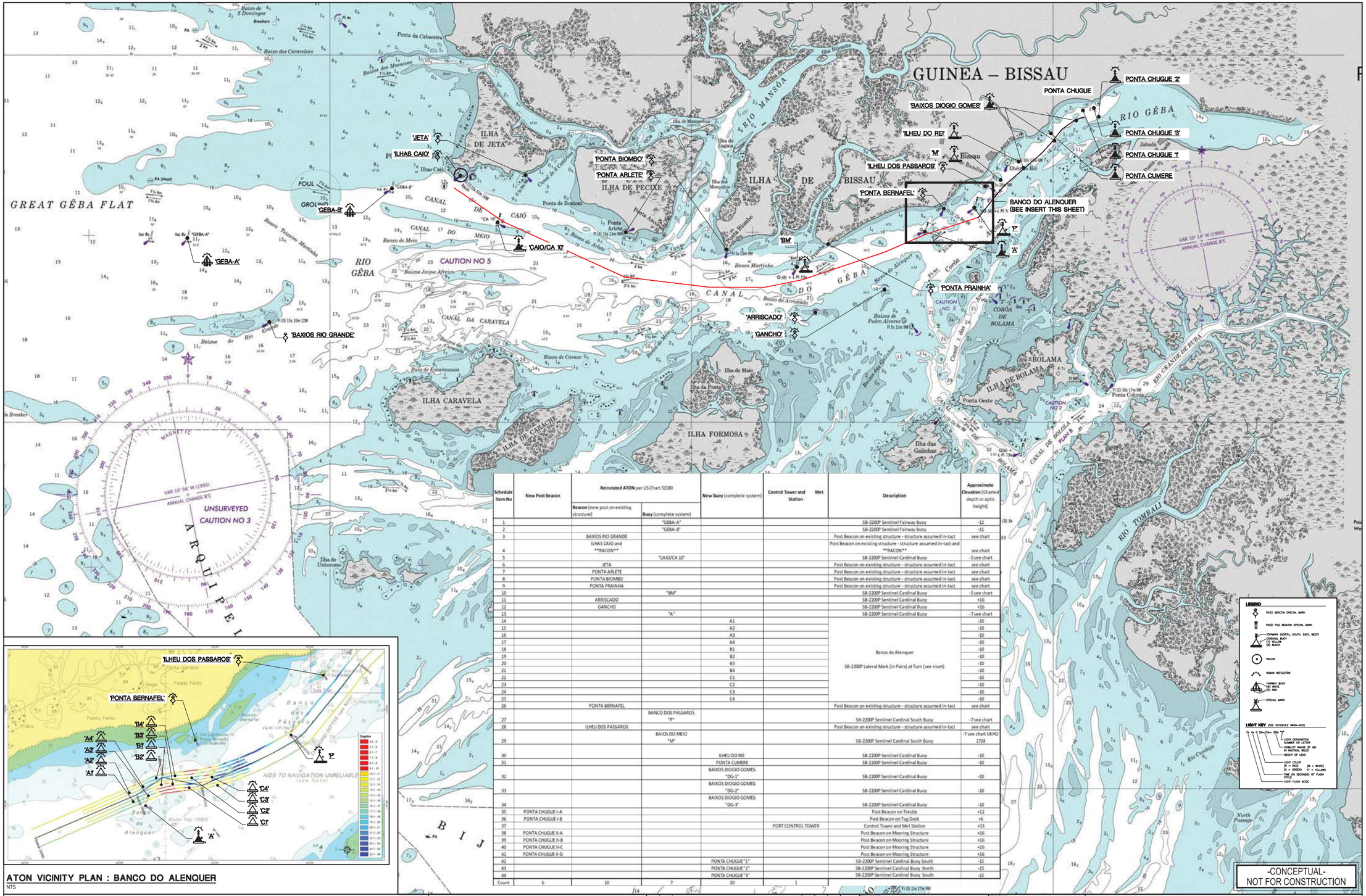

Schedule Item No	New Post Beacon	Reinstated ATON per US Chart 51580		New Buoy (complete system)	Control Tower and Met Station	Description	Approximate Elevation (Charted depth or optic height)
		Beacon (new post on existing structure)	Buoy (complete system)				
1			"GEBA-A"			SB-2200P Sentinel Fairway Buoy	-12
2			"GEBA-B"			SB-2200P Sentinel Fairway Buoy	-11
3		BAXIOS RIO GRANDE				Post Beacon on existing structure - structure assumed in-tact	see chart
4		ILHAS CAIO and ***RACON***				Post Beacon on existing structure - structure assumed in-tact and **RACON**	see chart
5			"CAIO/CA 10"			SB-2200P Sentinel Cardinal Buoy	-5 see chart
6		JETA				Post Beacon on existing structure - structure assumed in-tact	see chart
7		PONTA ARLETE				Post Beacon on existing structure - structure assumed in-tact	see chart
8		PONTA BIOMBO				Post Beacon on existing structure - structure assumed in-tact	see chart
9		PONTA PRAINHA				Post Beacon on existing structure - structure assumed in-tact	see chart
10			"BM"			SB-2200P Sentinel Cardinal Buoy	-5 see chart
11		ARRISCADO				SB-2200P Sentinel Cardinal Buoy	+16
12		GANCHO				SB-2200P Sentinel Cardinal Buoy	+16
13			"A"			SB-2200P Sentinel Cardinal Buoy	-7 see chart
14				A1		Banco do Alenquer SB-2200P Lateral Mark (in Pairs) at Turn (see inset)	-10
15				A2			-10
16				A3			-10
17				A4			-10
18				B1			-10
19				B2			-10
20				B3			-10
21				B4			-10
22				C1			-10
23				C2			-10
24				C3			-10
25				C4			-10
26		PONTA BERNAFEL				Post Beacon on existing structure - structure assumed in-tact	see chart
27			BANCO DOS PASSAROS "P"			SB-2200P Sentinel Cardinal South Buoy	-7 see chart
28		ILHEU DOS PASSAROS				Post Beacon on existing structure - structure assumed in-tact	see chart
29			BAIOS DO MEIO "M"			SB-2200P Sentinel Cardinal South Buoy	-7 see chart UKHO 1724
30				ILHEU DO REI		SB-2200P Sentinel Cardinal Buoy	-10
31				PONTA CUMERE		SB-2200P Sentinel Cardinal Buoy	-10
32				BAIXOS DIOGIO GOMES "DG-1"		SB-2200P Sentinel Cardinal Buoy	-10
33				BAIXOS DIOGIO GOMES "DG-2"		SB-2200P Sentinel Cardinal Buoy	-10
34				BAIXOS DIOGIO GOMES "DG-3"		SB-2200P Sentinel Cardinal Buoy	-10
35	PONTA CHUGUE I-A					Post Beacon on Trestle	+12
36	PONTA CHUGUE I-B					Post Beacon on Tug Dock	+6
37					PORT CONTROL TOWER	Control Tower and Met Station	+33
38	PONTA CHUGUE II-A					Post Beacon on Mooring Structure	+16
39	PONTA CHUGUE II-B					Post Beacon on Mooring Structure	+16
40	PONTA CHUGUE II-C					Post Beacon on Mooring Structure	+16
41	PONTA CHUGUE II-D					Post Beacon on Mooring Structure	+16
42				PONTA CHUGUE "1"		SB-2200P Sentinel Cardinal Buoy South	-15
43				PONTA CHUGUE "2"		SB-2200P Sentinel Cardinal Buoy North	-15
44				PONTA CHUGUE "3"		SB-2200P Sentinel Cardinal Buoy South	-15
Count	6	10	7	20	1		

ATON VICINITY PLAN : BANCO DO ALENQUER

NTS

1. BASEMAP: US NIMA CHART 51580

0 2500 5000 10000
GRAPHIC SCALE METRES
1:25000 (A1)

REV	T.I.	DESCRIPTION	DRN	DSN	APR	DATE
B	A	DESIGN EDITS - DRAFT - NOT FOR CONSTRUCTION	BJR	BTS	EAL	30-01-15
A	A	DRAFT - NOT FOR CONSTRUCTION	BJR	BTS	EAL	02-01-15

REVISIONS

T.I. TYPE OF ISSUE: (A) PRELIMINARY (B) FOR REVIEW (C) FOR APPROVAL (D) FOR INFORMATION (E) CONTRACT DOCUMENT (F) FOR CONSTRUCTION (G) AS BUILT (H) CANCELLED

PREPARED FOR:
GBMINERALS

PREPARED BY:
Baird
W.F. Baird & Associates
Coastal Engineers Ltd.

IN ASSOCIATION WITH:
Lycopodium

FARIM PHOSPHATE MARINE EXPORT PROJECT

AIDS TO NAVIGATION (ATON) PLAN
REINSTATE EXISTING & NEW ATON

DRAWING: 11954 – CD – 220
REV. B
DATE: 12-FEB-2015

P:\11954.300 FARIM BARGE TRANSHIPPING\H - CADD\WORKING DRAWINGS\01 PHASE\DWG\DIRECT LOAD REV-B\220 - AID TO NAV.DWG

Date Plotted: 2/12/2015 1:00:27 PM

APPENDIX 1-C

TERMS OF REFERENCE

(39 Pages)

GB MINERALS AG

TERMS OF REFERENCE

FARIM PHOSPHATE PROJECT,

OIO REGION

GUINEA-BISSAU

ECO PROGRESSO

KNIGHT PIESOLD

GOLDER ASSOCIATES

SEPTEMBER 2015

Table of Contents

1.0 PREAMBLE 4

2.0 INTRODUCTION 5

2.1 Justification for the Study 6

2.2 Objectives of the Study 6

2.2.1 General Objectives 6

2.2.2 Specific Objectives 7

2.3 Methodology 7

2.4 ESIA Contributors 8

2.5 Structure of the ESIA 13

2.5.1 Political, Institutional and Legislative Framework 14

3.0 General Description of Project activities 15

3.1 Project Description 15

3.2 Phases of the Project 21

3.3 Mining Method 22

3.4 Equipment and Materials to be Utilized 24

4.0 PROJECT LOCATION AND ZONES OF INFLUENCE 27

4.1 Project Location 27

4.2 Concession Area 28

4.3 Baseline limits of ESIA areas of influence 29

5.0 Environmental Assessment 30

6.0 IDENTIFICATION AND ASSESSMENT OF ENVIRONMENTAL AND SOCIAL IMPACTS 34

7.0 ANALYSIS, IDENTIFICATION OF ALTERNATIVES AND RISK MANAGEMENT 36

8.0 MEASURES PROPOSED 37

9.0 ENVIRONMENTAL AND SOCIAL MANAGEMENT PLAN 38

10.0 ESIA CONCLUSIONS AND RECOMMENDATIONS 39

10.1 Institutional Arrangement for Follow-up and Monitoring 39

11.0 REFERENCES 39

1.0 PREAMBLE

GB Minerals AG engaged Golder Associates (UK) Ltd. (“Golder”), an international consultancy firm, to undertake an Environmental and Social Impact Assessment (ESIA) for the Farim Phosphate Project in compliance with the National Environmental Assessment Law (no 10/ 2010, September 24).

The deposit is a high quality sedimentary phosphate matrix that presents potentially favourable conditions for open pit mining. The phosphate layer is relatively continuous and extends for approximately 40 km^2. Thus, the useful life of the mine is estimated to be at least, 25 years. The mining option that was submitted consisted of 1 million tonnes per annum (mtpa) of beneficiated product. The project involves the development of mining, processing, and transportation of phosphate rock. The mine site included: an open pit mine; Run of Mine (“ROM”) stockpile, Waste Management Facilities ("WMFs"), workshops, offices, and housing. A process plant to carry out the beneficiation process was included in this beneficiation option as well.

The Golder study was completed in 2014 and submitted to the Ministry of Natural Resources in December 2014. Since this time, the scope of the project has changed as follows:

- The mine has increased in size to 1.75 mtpa of production from 1.3 mtpa
- The process plant will use a different process consisting of scrubbing instead of magnetic separation and will produce 1.3 mpta of final product increased from 1.0 mtpa previously
- The final phosphate concentrate will be transported over the Cacheu river by conveyor and loaded on to trucks to be transported to Ponta Chugue. The previous scenario considered barging the product down the Cacheu river and then trans-shipping in the middle of the Atlantic Ocean
- A port will be constructed at Ponta Chugue capable of directly loading ships of with capacities of up to 35,000 tonnes.

The present Terms of Reference are meant to reflect the current scenario and replace those proposed in the Golder Report of 2014. The Terms of Reference ("TOR") comply with the legal requirements for this type of project set forth by the Environmental Assessment law, more specifically, Article 12, clause 2. Given this compliance, GB MINERALS AG submits these TOR for approval by the Competent Environmental Assessment Authority (“CAI”) as a condition for completing the Environmental and Social Impact Assessment. This assessment is required to determine the social and environmental viability of the project and will be a condition to receive authorization for the development of project. This document was prepared in close compliance with the requirements of Law No. 1/2000 which are required for approval of the Mining Law draft and Law No. 10/2010.

GB MINERALS AG intends to produce a Portuguese version of the Feasibility Study (FS) by September 2015, and an ESIA that complies with World Bank standards, as well as *International Finance Corporation (IFC) performance standards.* The date for completion of both studies is by the end of September 2015.

ESIA for the Farim phosphate project, will cover all project phases: construction, operation and decommissioning of the mine site and the Port of Chugue. The ESIA will also cover transportation including the section of the existing road connecting Farim to Ponta Chugue that will be used in the study. The Study will consist of four volumes, which shall have the general description of the previous preliminary ESIA for the mine site by *Golder*.

2.0 INTRODUCTION

Mining is an important sector that could sustain the economy of any country, contributing to the well-being and improvement of the quality of life of its people, and in particular the local population (if equitable local development is established), provided it is operated in a socially responsible way, and keeping sustainable development in mind.

In order for there to be a responsible and sustainable mining industry within a country, technical and legal frameworks must be in place that promote the use of best practices as well as compliance with laws and regulations, conventions and protocols.

Open pit mining operations obviously cause considerable impact on the environment, greatly altering the areas of influence, particularly where tailings and rejects/waste deposits are made. The impact could be serious when using harmful chemical substances during the operation and ore processing phases. Hence, it is critical that the different sources of harmful emissions are reviewed and that avoidance, mitigation, compensation and monitoring measures are proposed. There should be an effective monitoring program in place aimed at reducing the impact effects on the quality of the environment and human health.

GB MINERALS AG, as the entity that holds of the exploitation rights for the Farim Project, fully intends to be in compliance with the Guinea-Bissau legal framework (laws and regulations), as it implements the Farim phosphate mining project in Farim, in northern Guinea-Bissau, Oio Region.

This project is supported by a mining exploration agreement signed by the Government of the Republic of Guinea-Bissau and GB MINERALS AG, granting the award of License No. 04, with an area of 30,625 ha. Within the area already explored by GB MINERALS AG, 106 million tones of resources have been identified at an average grade of 28.4% P_2O_5, and within the mine, there are 44 million tonnes of reserves with P_2O_5 at an average grade of 30.0%.

GB MINERALS AG intends to assess the project's impact on the environment, in order to adequately address

this aspect of its activities. It is within this context that the Company commissioned an assessment guided by the present terms of reference.

2.1 Justification for the Study

The Farim Phosphate Mining Project, undertaken by GB MINERALS AG, includes the mining and processing of ore as well as the construction of buildings and facilities to support these production activities.

Under the Environmental Assessment Act (Law No. 10/2010 of 24 September), this type of project (mining) is considered Category A, and, as such, must be the subject of an Environmental and Social Impact Assessment. The geographical area of the country covered by the project holds significant natural resources, particularly forests, and there is a Protected Area located in the area (Natural Park of Tarrafes over the Cacheu River).

Although there are significant positive expectations from this type of project, particularly economically (both nationally and locally)), the fact remains that, under the conditions described above, such a project, will undoubtedly impact the environment as well as local community life. Thus, to maximize the benefits of the project, the project must be planned with environmental and social sustainability in mind, which involves incorporating these objectives in the various stages of the project. Indeed, such integration is a principle guideline that needs to be considered in carrying out of an in-depth ESIA.

This approach is consistent with the concerns expressed in the Mining Agreement (Article 24) between the Government and the Company, which stipulates that GB MINERALS AG "respect the national and international environmental management standards in all phases of the project" and to "develop an environmental management plan in cooperation with the State".

Furthermore, according to the law governing the environmental code in Guinea-Bissau, the Company is obliged to perform an environmental assessment with well-defined and accepted procedures. Taking these legal and regulatory requirements into account, the present ToR is in compliance with Article 12, paragraph number 2, and the Environmental Assessment Act.

2.2 Objectives of the Study

2.2.1 General Objectives

The purpose of the Terms of Reference is to establish the requirements to fully assess the project's impact on the biophysical, human and socio-economic environment and to propose measures to maximize the positive impacts, and minimize the negative ones. The assessment should include a risk assessment (including extreme events - floods, cyclones, and conflicts) of the project. The assessment will be used as a basis for the Government's approval regarding the social and environmental viability of the project.

2.2.2 Specific Objectives

- Guide the Government in decision making regarding the environmental and social viability of the project;
- Prepare a high quality assessment with well-established control measures and indicators for follow-up and monitoring;
- Identify and classify potential risks due to natural and human factors on aspects of the project
- Propose an Environmental and Social Management Plan with effective measures to minimize the negative effects and maximize the positive;
- Propose a flexible and functional monitoring and assessment structure;
- Include best practices with respect to Industrial Hygiene, Health and Safety, as recommended by international standards such as the WHO, EU, etc....

2.3 Methodology

The multidisciplinary Team responsible for carrying out the ESIA for the Project will use appropriate scientific methodology including a thorough literature review, case studies and field surveys. The surveys will be carried out with direct, primary sources (such as fieldwork and surveys), and secondary sources (from existing research or further analysis of primary research). Direct research will include the development of questionnaires / guidelines to be used in social and economic surveys for the project including public consultation. Public Consultation will record the concerns and expectations of the population in the project's zones of influence. Secondary sources should include a review of any documented consultations, international standards and a world wide web search as well as "Ad hoc" methods, matrices of interacting elements, maps of overlapping factors; mathematical simulations or combinations of methods. The study will also include a justification for the study methodology used.

The information collected on the field will be organized and interpreted scientifically. Thus, the study will not only be descriptive, but will include both a quantitative and qualitative analysis of important criteria that will accurately depict the impacts of the proposed project as well as presenting measures to manage the environmental and social sustainability. Such work will include figures, photographs and maps of adequate scale to effectively illustrate the environment during the various stages of the project (construction, operation and decommissioning. The figure below outlines the process:

National Project Steps Required

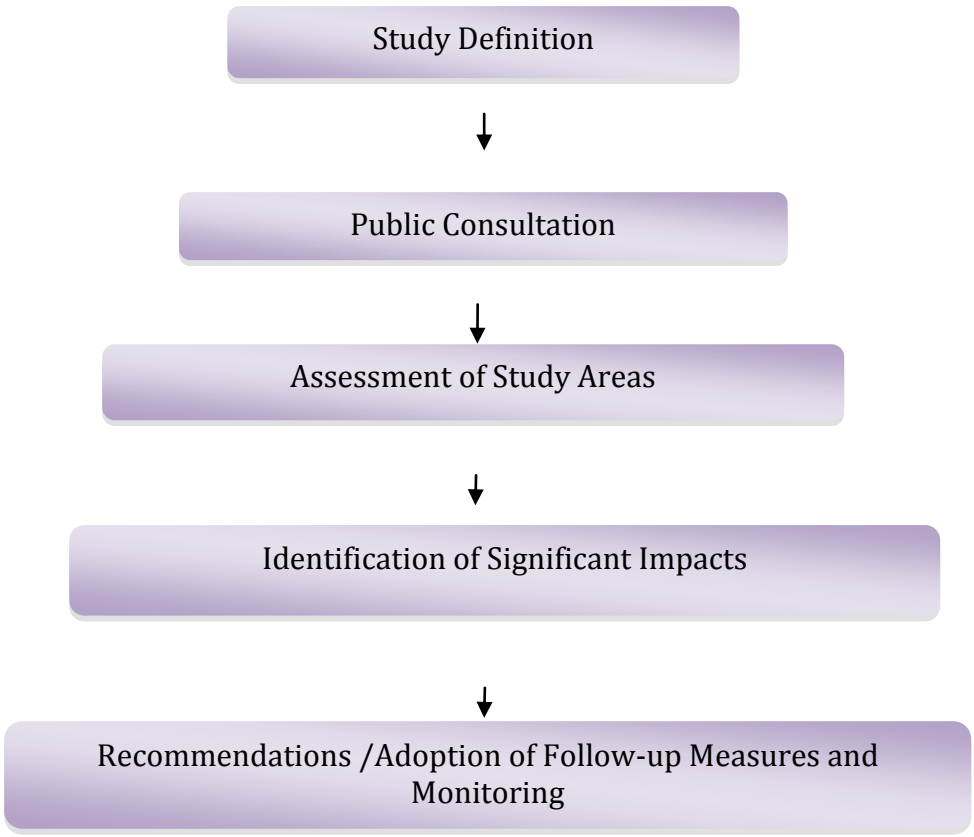

2.4 ESIA Contributors

The ESIA should be performed by an internationally recognized consultancy consisting of multi-disciplined team with experience in the mining sector and related areas. The objective is to try to cover a large number of environmental and social components to prepare a complete and accurate description of the project's various stages. The topics to be covered will also help to determine the level of sensitivity and vulnerability of the environmental and social components that exist in the project's zones of influence. As such, the multidisciplinary team should include the following disciplines:

- An environmental geologist or mining environmentalist;
- An environmental geologist / hydrogeologist;
- An environmentalist specializing in Natural Resources Management and management of forest ecosystems;
- A specialist in security management, pollution and risks;
- A health specialist;
- A marine biologist;

- A sociologist;
- A social economist; and
- An archaeologist.

ECO PROGRESSO

Name	Role in Farim ESIA	Qualifications and Experience
Eng.".IMestre Alexandre Cabral	Diretor at Eco Progresso, Lead for the GB Minerais EIAS	Environment / climate change specialist
Eng: .IMestre Colido Viera	Manager for GB Minerais EIAS - soils	Agronomist specializing in tropical areas.
Dr. Divaldo Alberto Sanca	Manager for GB Minerais EIAS – Socio Economics.	Specialist in macro economics
Eng: .IMestre Jorge Sebastião Boissy	Manager for GB Minerais EIAS – Geology	Geologist
António Pansau N'DAFÁ	Manager for GB Minerais EIAS – SIG	Specialist in SIG

Name	Role in Farim ESIA	Qualifications and Experience
Karen Dingley	Project Director	B.Eng. (Hons) Civil Diploma of Management Certificate of Management Chartered Engineer
Darren King	Project Manager	M.Sc. Engineering Geology B.Sc. (Hons) Geology Chartered Geologist
Carl Nicholas	ESIA specialist	B.Sc. (Hons) Biodiversity Conservation and Management M.Sc. (Distinction) Environmental Diagnosis

Name	Role in Farim ESIA	Qualifications and Experience
Marion Thomas	Public consultation and disclosure, ESIA technical advisor	M.Sc. Engineering Geology M.Sc. Geology Post-graduate Certificate in Education B.Sc. (Hons) Geology
Michaela Simms	Project coordinator	Master of Conservation Biology B.Sc. Ecology
Samantha Arnold	Air quality and meteorology	B.Sc. (Hons) Physical Geography Ph.D. Physical Geography Chartered Geographer Chartered Scientist
Bruce Dean	River morphology and oceanography	M.Sc. (Hons) Engineering (Coastal Engineering Hydraulics) B.Sc. Civil Engineering
David Hybert	Groundwater	Post-graduate Diploma Land and Water Management B.Sc. (Honours) Environmental Science
Matt Goode	Surface water	M.Sc. (Merit) Sustainable Management of the Water Environment B.Sc. (Hons) Geology
Chris Viljoen	Soil assessment	M.Sc. Soil Science B.Sc. (Hons) Soil Science B.Sc. Soil Science and Botany
Adrian Hudson	Terrestrial ecology	B.Sc. Zoology and Physiology M.Sc. Environmental Science
Isabel Johnson	Aquatic ecology	M.Sc. Biology (Marine Science) B.Sc. Zoology

Name	Role in Farim ESIA	Qualifications and Experience
Stuart McGowan	Noise and vibrations	Post-graduate Diploma Environmental Management Systems B.Eng (Hons) Chemical and Process Engineering Chartered Environmentalist
Paul Wheelhouse	Archaeology and cultural heritage	B.A. (Hons) Ancient History and Archaeology
Nigel Rockliff	Visual and landscape effects	B.A. Landscape Architecture Post-graduate Diploma Landscape Architecture Chartered Landscape Architect
Pierre Gouws	Senior social scientist and impact assessor	B.Sc. Human Physiology, Genetics and Psychology B.Soc. Sci. (Hons) Psychology M.A. Psychology
Brian Griffin	Natural hazards risk assessment	B.A.Sc. Chemical Engineering
Bernadette Azzie	Geochemistry	Ph.D. Mine Water Chemistry M.Sc. Environmental Geochemistry B.Sc. (Hons) Environmental Earth Science B.Sc. Geology
Rosana Moraes	Human health and ecological risk assessment	Ph.D. Environmental Sciences (Environmental Systems Technology) M.Sc. (Hons) Engineering (Applied Environmental Measurement Techniques) M.Sc. (Hons) Zoology B.Sc. Biological Sciences

Name	Role in Farim ESIA	Qualifications and Experience
Richard Cook	Project Manager and ESIA Specialist	Senior ESIA practitioner and project manager with 18 years of relevant experience.
Steve Aiken,	Geochemistry, Hydrogeology and Water Management Specialist	Environmental engineer with over 25 years of experience.
Dr. Robert Mercer,P.Eng	Managing Principal	Professional engineer with 25 years experience in Rock Mechanics
Ryan Stinson	EIAS write-up.	Senior ESIA practitioner with 18 years of relevant experience.
Jason Plamondon	Prepare project description and mine closure plans, as well as provide day-to-day coordination support tracking the team's progress and coordinating report production.	Environmental scientist with 8 years of experience in environmental data collection, analysis and reporting. He has a strong background in freshwater aquatics, ESIA report coordination and production, and mine closure planning
Ryan Weir, P.Eng	Program planner for ESIA activities.	Project engineer with 8 years experience in planning and management of ESIA projects in remote locations.
Alejandro Delgado:	Provide technical support to the collection of baseline noise measurements at the port and will complete the air quality and noise modeling,	Atmospheric specialist, engineer with 5 years experience in air quality and noise baseline data collection and modelling
Ben Green, P.Geo	Lead for hydrogeology components of ESIA	Senior hydrogeologist with relevant experience in West Africa including Guinea, Mauritania and Senegal.
Chris Viljoen	Provide information on soils as needed.	Senior soil scientist
Christine Moore, M.Sc	Responsible for preparing the HHERA for the mine and port facilities.	Senior toxicologist with more than 23 years experience.
Elliot Sigal, QPRA	Provide senior review and approval of the HHERA.	Risk Assessment specialist. Qualified Person for Risk Assessment (QPRA).

Name	Role in Farim ESIA	Qualifications and Experience
Dr. Brian Colloty	Responsible for addressing the biodiversity aspects of the project, and will lead the terrestrial and marine field programs	Senior Botanist and Marine Biologist
Greg Huggins:	Oversee completion of Phase 1 of resettlement planning under the livelihoods scope of work	Resettlement and socio-economic specialist with over 20 years experience.
Marco Da Cunha	Verification of the land cover mapping and development of resettlement framework costs for the ESIA	Resettlement specialist with 8 years experience throughout the African continent.
Dr. Doug Park:	Responsible for completing the field archaeology and cultural heritage surveys, baseline reporting and the cultural heritage portion of the ESIA.	Accomplished field archaeologist with over 14 years of experience. He brings an impressive background in West Africa archaeology and cultural heritage, having completed survey and ESIA related work on projects in Guinea, Senegal, Mali, Mauritania, Niger, and Nigeria.
Mark Ryan	Social economic data collection, public consultation and traffic studies.	Social scientist with 8 years of experience that includes socio-economic data collection, stakeholder engagement, and environmental management planning.
Neal Neervoort	Noise monitoring and soil and groundwater field work	Scientist with 5 years experience implementing sampling programs and completing audits across Africa.

2.5 Structure of the ESIA

The ESIA shall be structured in separate sections in accordance with the requirements of Article no. 16 (Non-Technical Summary, Environmental and Social Impact Assessment Report and Environmental and Social Management Plan). The ESIA must also include the Supplementary studies required by CAIA (namely the Environmental Economic Assessment and Risk Analysis and Hazard Studies). The ESIA for the Farim Phosphate Project must also respect the provisions in Articles 17 to 20 of Law No. 10/2010 of 24 September.

2.5.1 Political, Institutional and Legislative Framework

In this section, the ESIA should cover the full political, legal, and institutional framework that will apply to the Project and that will govern the approval for responsible mining of the Farim deposit, approval that will consider the strategic, cumulative and residual social and environmental impacts as well.

i) **Political and institutional** - identify / propose a functional institutional political framework for institutions responsible for the environmental policy and the existing interactions with other institutions within relevant framework. Determine, in a clear and objective manner, the participation and responsibility of each institution in the implementation process of the measures contained in the Environmental Management Plan (ESMP) and Action Plan for involuntary Resettlement (APR).

ii) **Legal Framework** – the multidisciplinary team will share the information from the ESIA national legal aspect (laws, regulations, and technical standards) applicable to the mining sector and environmental protection. Include International guidelines, such as treaties and signed conventions ratified by Guinea-Bissau, the technical standards which are required by the development partners such as UEMOA, ECOWAS, BOAD (West African Development Bank), World Bank, WHO, IMF, etc., applicable to mining exploration and relevant to the Farim project process.

3.0 GENERAL DESCRIPTION OF PROJECT ACTIVITIES

3.1 Project Description

The environmental studies were initiated by GB Minerals in 2011. The socio-economic and cultural heritage studies were conducted from 2011 to 2012 by Tropica Environmental Consultants Ltd. from Senegal. The physical and biological baseline studies were carried out by Golder Associates (UK) Ltd. and are included in the a baseline report (Golder 2014a). These previous baseline studies performed between 2011 and 2013 were mainly focused on the mine site area. The previous studies also included the Cacheu River (downstream of the mine site) as part of an option to transport ore or concentrate to customers using the Cacheu River and then transhipping on a coastal location. Limited baseline studies were also conducted along the highway between Farim and Bissau as part of a pipeline transportation option to transport ore or concentrate to a port location.

This ToR description reflects the current project scenario. The ESIA will be to the Equator Principles Financial Institutions (EPFI) standards as would be required to parties potentially interested in financing part of or the entire project. The ESIA will be translated into the Portuguese language for submission to the Guinea-Bissau government, as well as other stakeholders. A summary of the information presented in the ESIA will be prepared and presented to the local stakeholders in the Portuguese language or presented orally in the local languages, Creole and Mandingo.

The project comprises the following components:

(i) **Open Pits** – as a two phased development, with southern and northern pits. This will require a dewatering system including drainage, ponds and pumps. For this reason, conventional mining methods will be used to extract the phosphate matrix. Note that because the deposit consists of soil and not rock, an open pit mine is the only economical technology availability to us at this time, and an underground mine cannot be contemplated

(ii) **Run of Mine (ROM) pad** – stockpile of phosphate matrix to feed the processing plant

(iii) **Beneficiation Process Plant (BPP)** – for treating phosphate matrix to produce beneficiated phosphate rock (also known as phosphate product);

(iv) **Product Stockpile** – prior to loading and transporting the product;

(v) **Mine Waste Management Facilities (WMF's)** – comprising Overburden Storage Facilities (OSFs) from the open pits and a Tailings Management Facility (TMF), a waste product from the BPP;

(vi) **Surface water management systems** - flood bunds to prevent water ingress to pits and surface structures, water course diversions and settlement ponds for treatment.;

(vii) **Storage and Maintenance facilities** associated with the mine operation;

(viii) **Fuel Facilities –** to store and supply fuel for power and vehicles;

(ix) Accommodation and ablution facilities;

(x) Administrative and support facilities;

(xi) Associated access and haul roads; and

(xii) Port facilities capable of directly loading ships with a capacity of 35,000 tonnes.

Mine Plan

The current mine plan will produce 1.75 mpta of phosphate at an average grade of 30.0% to feed the plant. The plant will produce a superior product of 34.1% P_2O_5.

Figure 3-1 Mining Sequence

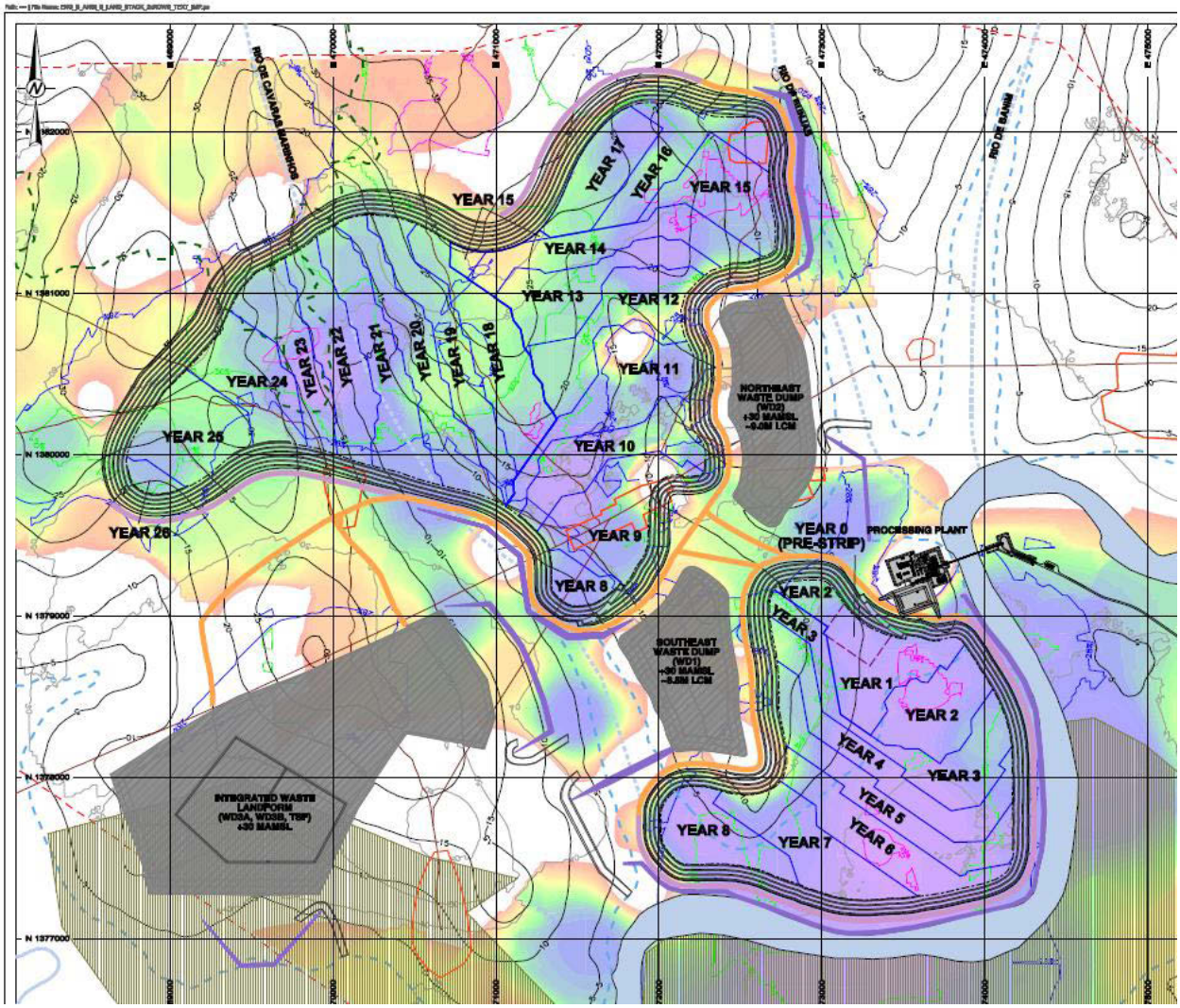

Consequently, a beneficiation process is required. The mine feed will be sent through a drum scrubber, attrition scrubber, reverse flotation, dewatering and tailings thickening. The tailings will be sent to the tailings pond via a pipeline. As the final product leaves the plant, it will be de-watered using a vacuum filter that will reduce the moisture content to 8%. The material will then be conveyed across the Cacheu River to the truck load-out. The mass balance of the process results in a 75.5% recovery of material thus making the final output of the project 1.3 mpta of phosphate rock product based on 1.75 mpta feed to the plant.

In order to control dust during transportation, the product will be transported to the port at 8% moisture, and thermal drying will occur at the port site to reduce the humidity to 3% to 5%.

Infrastructure will be located in both the mine area near Farim and in the port area near Ponta Chugue A single-storey administration building, 39 m x 12 m, will be located near the main site entrance gate. The building will

have a reception area, offices, meeting rooms, a main conference room, medical clinic, kitchenette and washrooms. The offices will be for managers, engineers, geologists, and clerks. A parking lot and transport and pick-up area is located adjacent to the administration building. A laboratory, 12 m x 5 m, will be used to test metallurgical samples from the process plant, mining and exploration operations. A plant kitchen and dining hall, 18 m x 8 m, will include a seating for up to 80 people with overhead fans, kitchen, and food storage. The two plant change house and ablutions buildings, male and female, will be 8 m x 7 m. They include separate male and female showers, bathrooms, and change room with lockers. There will be a main security gatehouse and separate process plant security gatehouse. The combined plant workshop/warehouse, used to store and maintain equipment and parts, will be 65 m x 24 m. The workshop/warehouse will house mechanical, electrical, instrumentation and general items. Internal offices will be supplied adjacent to the warehouse for warehouse and maintenance staff.

Figure 3-2 Geological Cross-sections

- **South Pit**

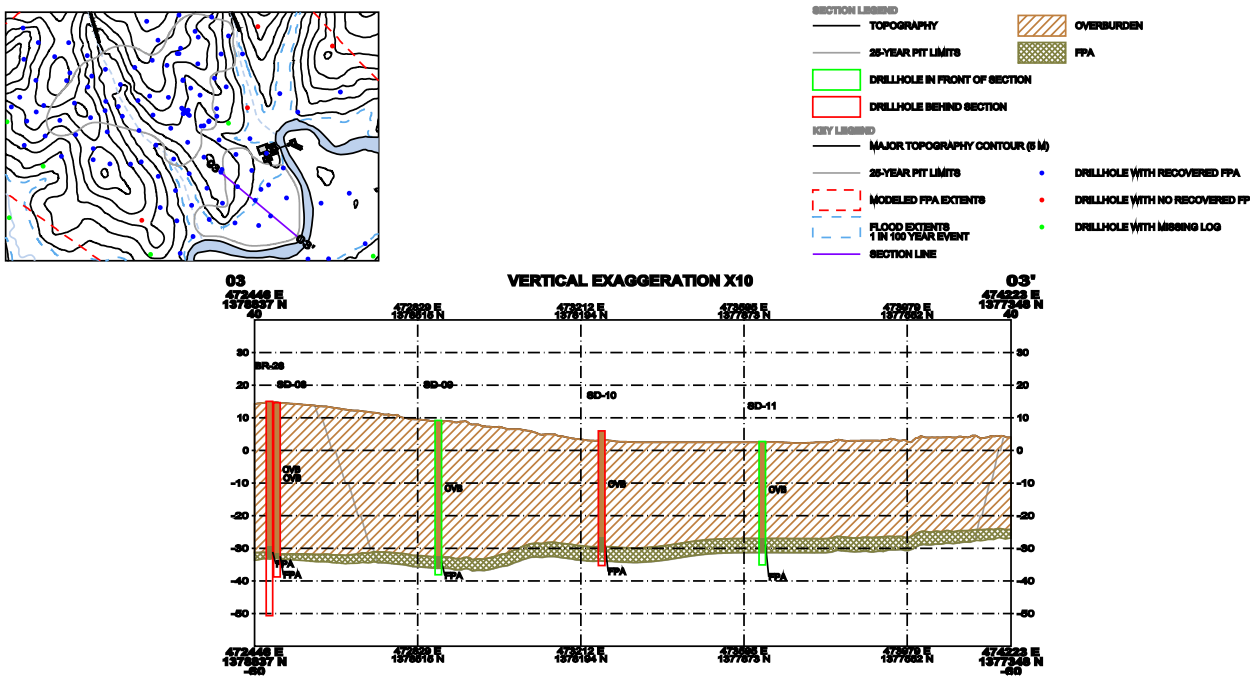

- **North Pit**

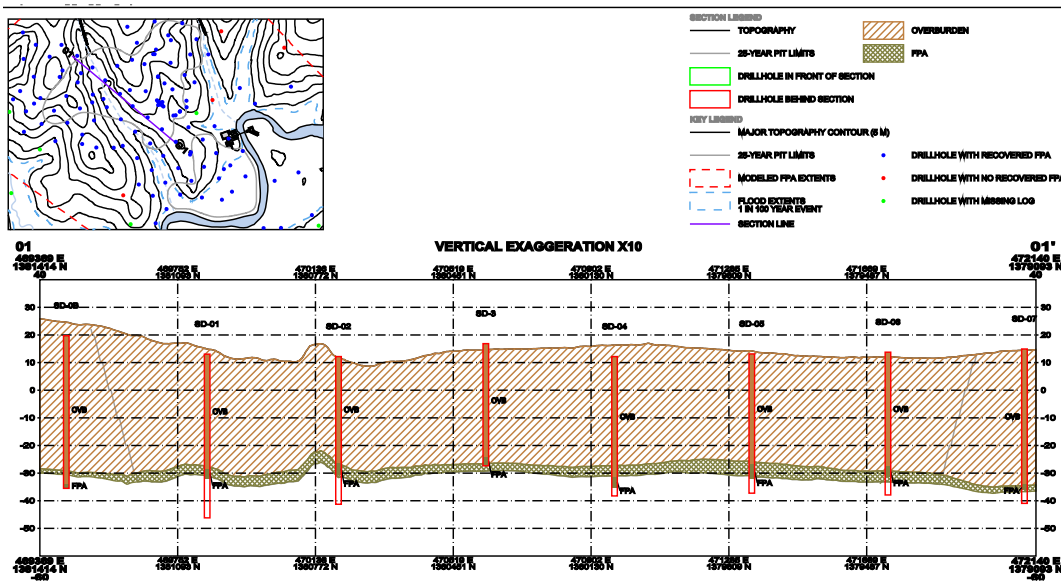

Road Transportation

The Road Transport component of the Project will utilize the existing paved road between Bissau and Farim, and will consist of the following additional infrastructure:

- A closed conveyor to move product from the product stockpile on the north side of the River Cacheu to a truck load out facility on the south side of the river.
- A truck load out facility, consisting of an elevated bin to store and transfer product to trucks.
- A spur road, approximately 2 km long, from the truck load out facility to the existing paved highway.

At both Farim and Ponta Chugue, fresh water will be supplied by local wells and pumped from the raw/fire water tank through a reverse osmosis unit to produce potable water for drinking. The potable water storage tank in Farim will have a 17 m3 capacity, and the one in Ponta Chugue will have a 15 m3 capacity. Two potable water pumps (one standby) will draw potable water from the potable water storage tanks and distribute it to potable water users for drinking, cooking, showers, and emergency eyewash stations throughout the corresponding facilities at Farim and Ponta Chugue. The reverse osmosis concentrate is pumped to a local area sump and periodically pumped back into the process circuit.

The general arrangement of the proposed Port Site is shown in Figure 2.4, and consists of the following components:

- A 4-km long new spur road to access the port site from the Bissau-Farim highway.
- Truck unloading facilities and a closed shed equipped with dryers (to dry the product from 8% to 3% moisture content).
- A second closed shed for product storage.
- A 200-m long trestle and dock structure into the River Geba.
- Ship-loaders to convey the product into the storage holds of the ships.

Within the port area there will be a single-storey administration building located near the port site entrance gate. The building will have a reception area, offices, meeting rooms, a main conference room, medical clinic, kitchenette and washrooms. The offices are for managers, engineers, and wharf personnel. A parking lot and transport and pick-up area is located adjacent to the administration building.

A wet concentrate shed, 109 m x 21 m, will receive product to be unloaded and dried to 3% to 5% moisture. A dry concentrate shed, 150 m x 36 m, will store final product for ship loading. Upon ship arrival, the product will be unloaded via front end loaders onto a conveyor feeding the ship loader. A combined shipping control room and sample building, 6 m x 3 m, will be used to check product moisture levels and store shipping records. A port kitchen and dining hall, 8 m x 6 m, will include a seating area for up to 20 people with overhead fans, kitchen, and food storage.

The current port design is for direct shipment of bulk carriers of up to 35,000 dead weight tonnes. These ships must enter the River Geba and navigate for approximately 60 nautical miles to the project site at Ponte Chugue for loading at a fixed wharf. The loading wharf consists of a trestle and infrastructure to support one radial telescoping ship loader. An example of a similar direct loading facility (without mooring buoys) is shown in below.

Port Infrastructure

- **Administration building**
  - 15 m x 10 m
- **Dryer**
  - 109 m x 21 m (expected to house the drier to lower product moisture to 3%)
- **Final Product storage**
  - 150 m x 36 m
- **Control Room for Ships**
  - 6 m x 3 m
- **Cafeteria**
  - 8 m x 6 m

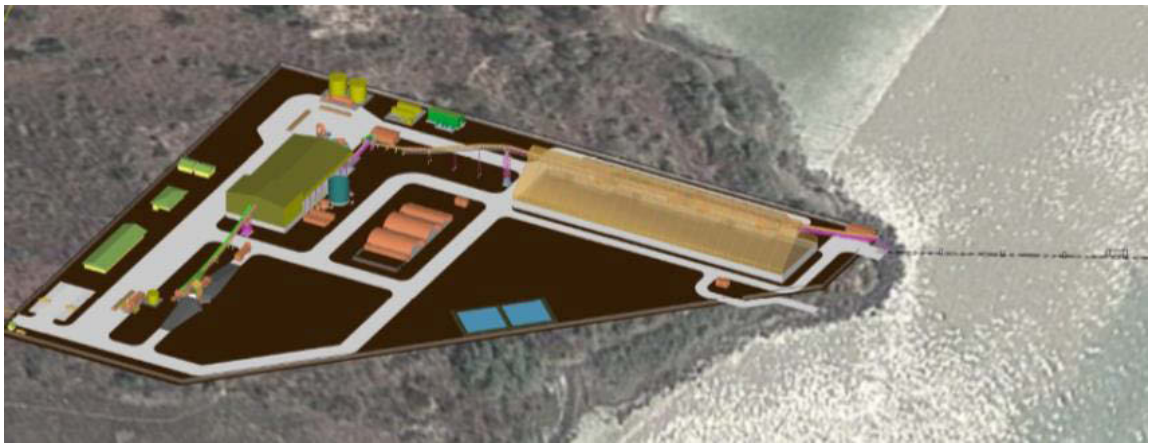

Figure 3-3 Port Area

In terms of power supply, Farim will have four diesel generators of 1.2 MW each, three will be operating and one will be a spare for a total installed capacity of 4.8MW. Ponta Chugue will have 3 diesel generators of 0.5 MW each, and one idle for a total installed capacity of 1.5 MW.

In the initial year of production, GB Minerals will employ approximately 556 employees and will peak at 818 employees near the end of the project. The total number of employees for administration, process, and port remains constant throughout the project. However, the number of mining operators increases each year because the amount of waste rock to be removed in the mine increases with time.

3.2 Phases of the Project

The Farim Project will have a life of approximately 32 years over three phases:

Construction*:* during which time the area for mining will be stripped of vegetation, soil, and overburden; dewatering will be carried out (to lower the water table in readiness for mining); infrastructure will be built (including offices, workshops, accommodation, storage areas, the processing plant, power supply, access and haul roads);

Operations*:* comprising the active phase with phased mining of phosphate matrix, and associated activities (processing of phosphate matrix, placement of tailings and overburden in engineered storage facilities, and co-rehabilitation of areas that are mined out, according to the rehabilitation plan; and

Closure*:* including the rehabilitation of the open pits, waste management facilities, dismantling of infrastructure where required (some infrastructure may be handed over to local authorities or communities, if agreed by all parties).

Some components of the mine are on-going throughout all phases of the mine life, while other activities are specific to the construction, operation or closure phases. However, in general, mitigation or management

procedures for one phase of the project are often similar to those used in the other phases. In order to provide consistency, the ESIA should try to incorporate similar methods for environmental and social management throughout the life of the project.

Construction is planned to commence after completion of the feasibility study and subsequent successful financing and will take approximately 24 months to complete. Dewatering of the proposed pit areas is one of the first tasks to be carried out; infrastructure to be developed includes access roads, water and power supplies, and accommodation for Project staff. The operation of the mine is currently expected to be approximately 25 years, and closure and reclamation is likely to require approximately 5 years (Figure 3.2.1).

Figure 3.2.1 Project Schedule

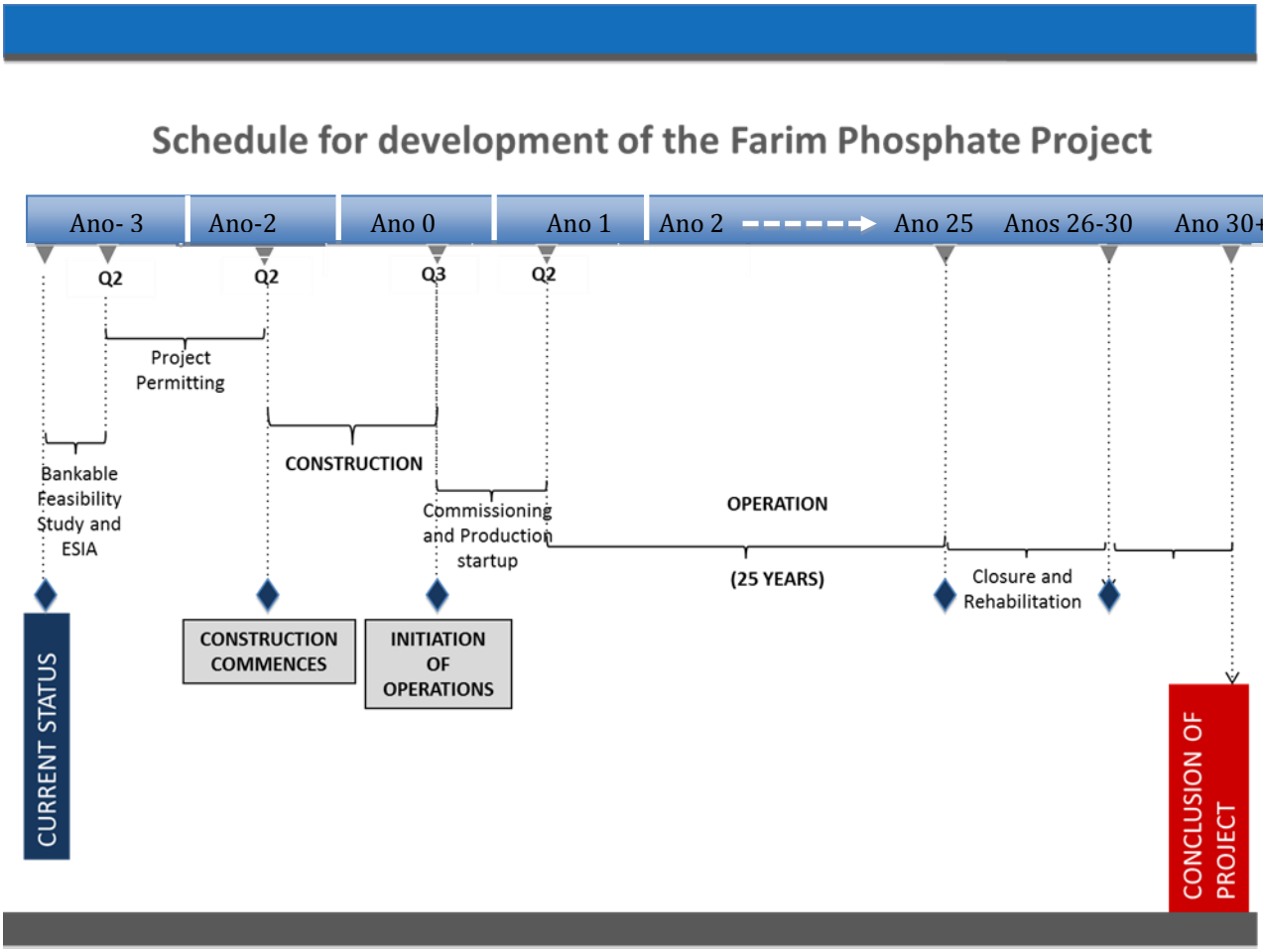

3.3 Mining Method

Overburden will be stripped and removed with 12 cubic metre (m^3) bucket front-end loaders matched with 97 tonne haul trucks. The matrix will be mined with 5 m^3 bucket class backhoes matched with 36 tonne trucks for efficient exploitation.

Overburden removal will require the pre-stripping and storage of topsoil, with subsoil material available for use as construction materials (depending on test results and suitability of materials). These materials will be used to form the flood bund around the OPA and will be treated if necessary.

As the pit is developed, overburden will be stockpiled until required for backfilling. Based on design slopes and voids to be back-filled, it is estimated that some backfilling will become feasible in the second year of mining.

Backfilling has been maximized as a cost-effective means of managing overburden and mine waste, and achieving closure objectives. Matrix will be hauled to a 130,000 t (dry) run-of-mine stockpile adjacent to the beneficiation plant, and segregated by quality (grade). The matrix will then be blended into a plant feed hopper by front-end wheel loaders with 12 m^3 buckets to achieve the desired product P_2O_5 grade. The plant feed hopper will feed matrix directly to the plant if possible.

Overburden excavation will advance ahead of the matrix extraction in maximum 10 m high production benches. Where the overburden thickness increases significantly (i.e., greater than 30 m), multiple overburden stripping benches will be developed and maintained in advance of matrix extraction.

A **Figura 3.3.1** shows a typical pit configuration for this method of mining.

Figure 3.3.1 Excavator / Truck Mining Methodology

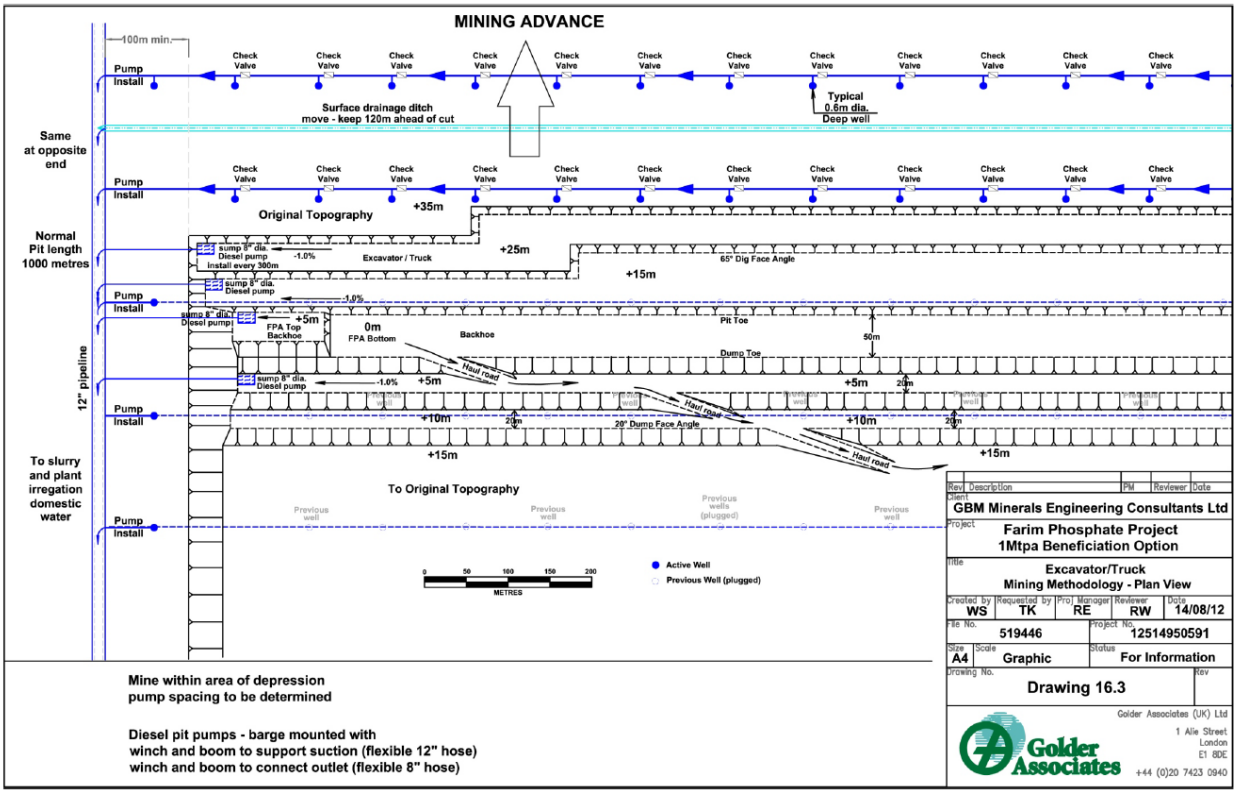

The ESIA should review the different existing techniques, technologies and exploration methods, the advantages and disadvantages of each and justification for the recommended option.

3.4 Equipment and Materials to be Utilized

Equipment selection for mining is dependent on a variety of factors including annual material movement, bench height, pit configuration and number of mining faces, and the overburden and phosphate rock.**Error! Reference source not found.**

Table 3.4.1 summarises the maximum number of equipment units required at any time throughout the 25 year mine plan. This equipment is for the Mine area only. The other equipment can be found in the ensuing table:

Table 3.4.1: Major Mine Equipment Summary

Description	Construction	Maximum in operation
Caterpillar 374DL - Backhoe	-	3
Backhoe - 2.1 m^3 bucket	1	1
Front End Loader - 12.2 m^3 bucket	2	6
Bulldozer - 405 hp	2	6

Description	Construction	Maximum in operation
End-Dump Truck – 97 tonne payload	6	23
End-Dump Truck – 36 tonne payload	1	10
Grader - 297 hp	2	3
Compactor - 147 hp	2	5
Scraper – 26 m^3 bucket	1	2
Caterpillar 428F - Backhoe Loader	1	1
Water Truck - 34,000 litre tank capacity	2	2
Fuel / Lube Truck	1	2
Mechanic's Truck	1	2
Pickup Truck	6	6
Mobile Crane – 95 tonne lifting capacity	1	1
Forklift – 10 tonne lifting capacity	1	1
Welding Machine	2	2
Light Plant	3	11
Mobile Rock Screening Plant	1	1
Reverse Circulation Rotary drill rigs	4	4

Table 3.4.2: Mobile Equipment for the Port and Process Areas:

Equipment	Amount
Light Vehicles (pick-up trucks)	23
All Terrain Forklift	1
Warehouse Forklift	1
Bobcat 753	1
Integrated Tool Carrier - Cat 930G	1
Telescopic Handler - Cat TH62	-
15 t Franna	1
50 t All Terrain Crane (second-hand)	-
Front End Loader - Cat 950	1
Front End Loader - Cat 236B	4
Generator 5 kVA	1
Trailer Mounted Air Compressor	1
Trailer Mounted Diesel Welder	2
Fusion Butt Welder 200 / 500	1
Fusion Butt Welder 90 / 315	1
Certified Man cage	1
Backhoe with Forklift Accessories	1
Mules, Diesel Golf Buggies	5
3t Tipper Truck	1
Utility Trailer	1
Operator for Cranes	12
Operator for Large Cranes	7
Emergency response/fire Ute	1
22 Seater Minibus	2
Volvo Trucks	43

4.0 PROJECT LOCATION AND ZONES OF INFLUENCE

4.1 Project Location

The Farim Phosphate Project is located in a rural area in the Oio region, central north Guinea-Bissau, approximately 25 km south of the Senegal border and approximately 5 km west of the town of Farim. It is 120 km northeast of Bissau, the capital (Figure 1-1). The ESIA will review in more detail the location of "tabancas" (villages) around the mine site and in the Farim Sector.

Figure 4-1 Farim Phosphate Project National Location

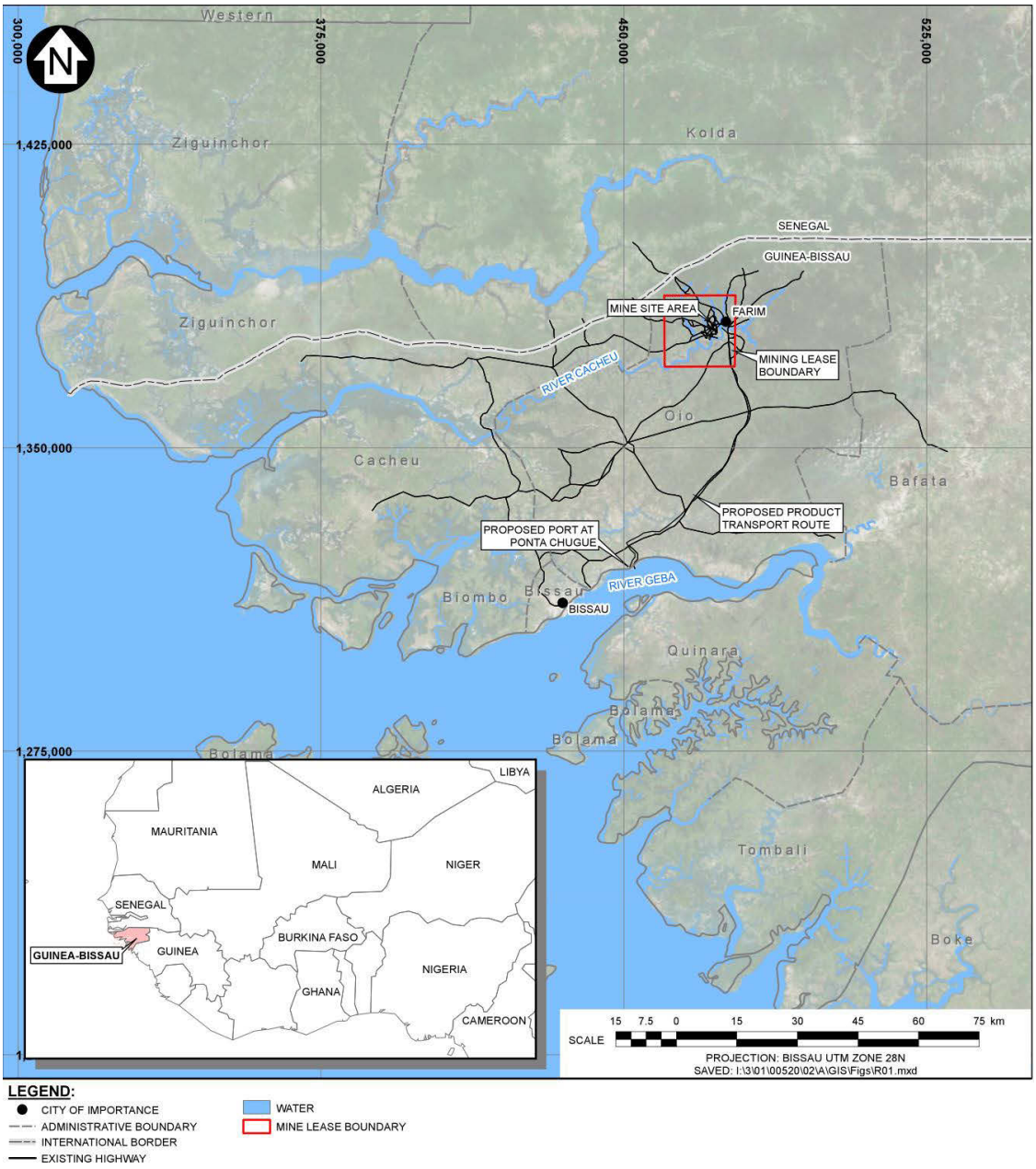

Farim is the second most populous district in the region, with approximately 8,000 inhabitants. Outside of Farim, the population in villages rarely exceeds 500 inhabitants (per community). Subsistence agriculture is the main livelihood, with cashew cultivation the prime source of income. Land is State property in Guinea Bissua but, at local level land is administered by customary (traditional) authorities.

4.2 Concession Area

The Project Mining Lease granted by the Guinea-Bissau Government covers 30.625 hectares and is surrounded by an Exploration Lease. Figure 4.2.1 highlights the Mining Lease area with corner co-ordinates of the area shown in the figure.

Figure 4-2 Mining Lease

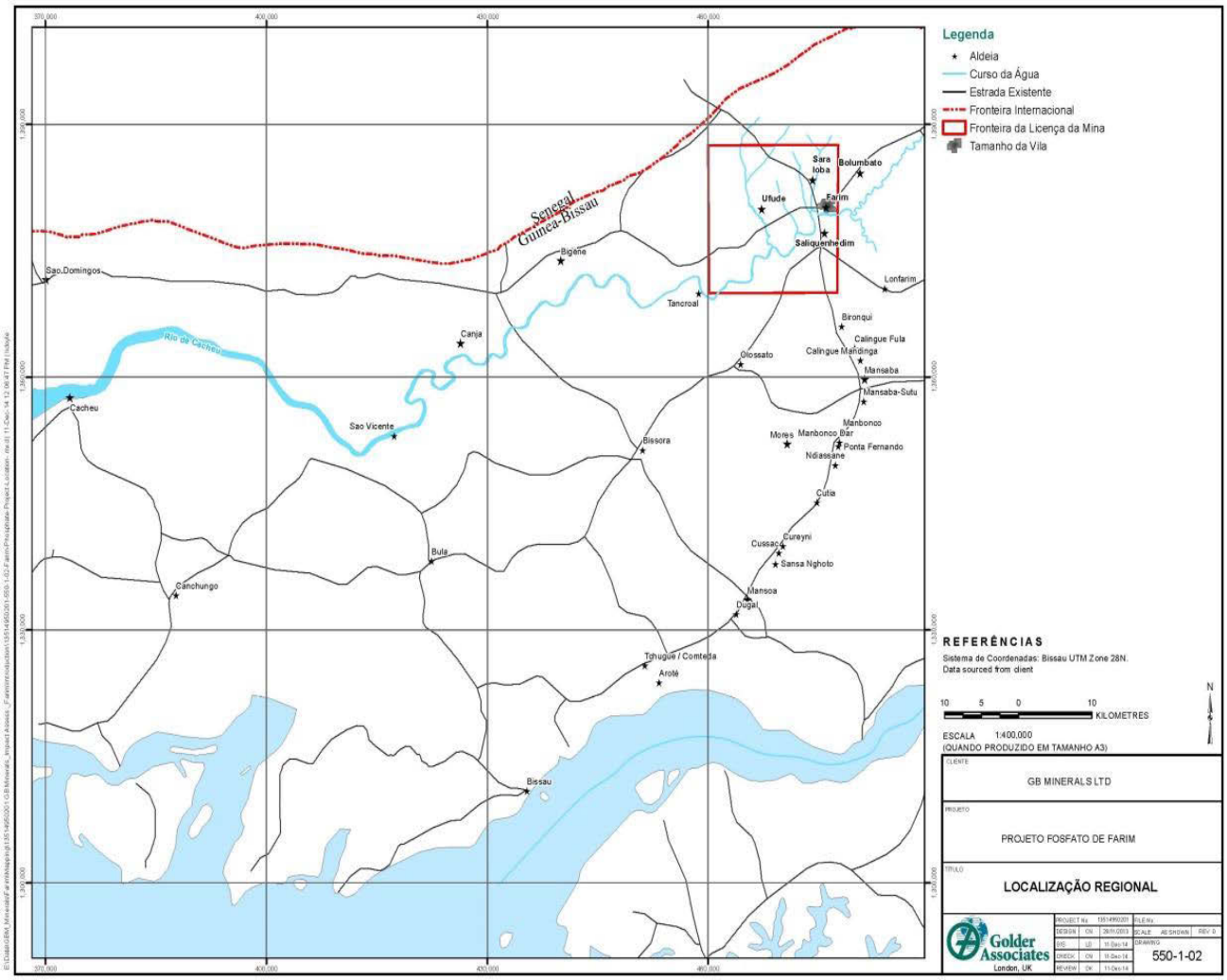

Figure 4-3 Mine Area

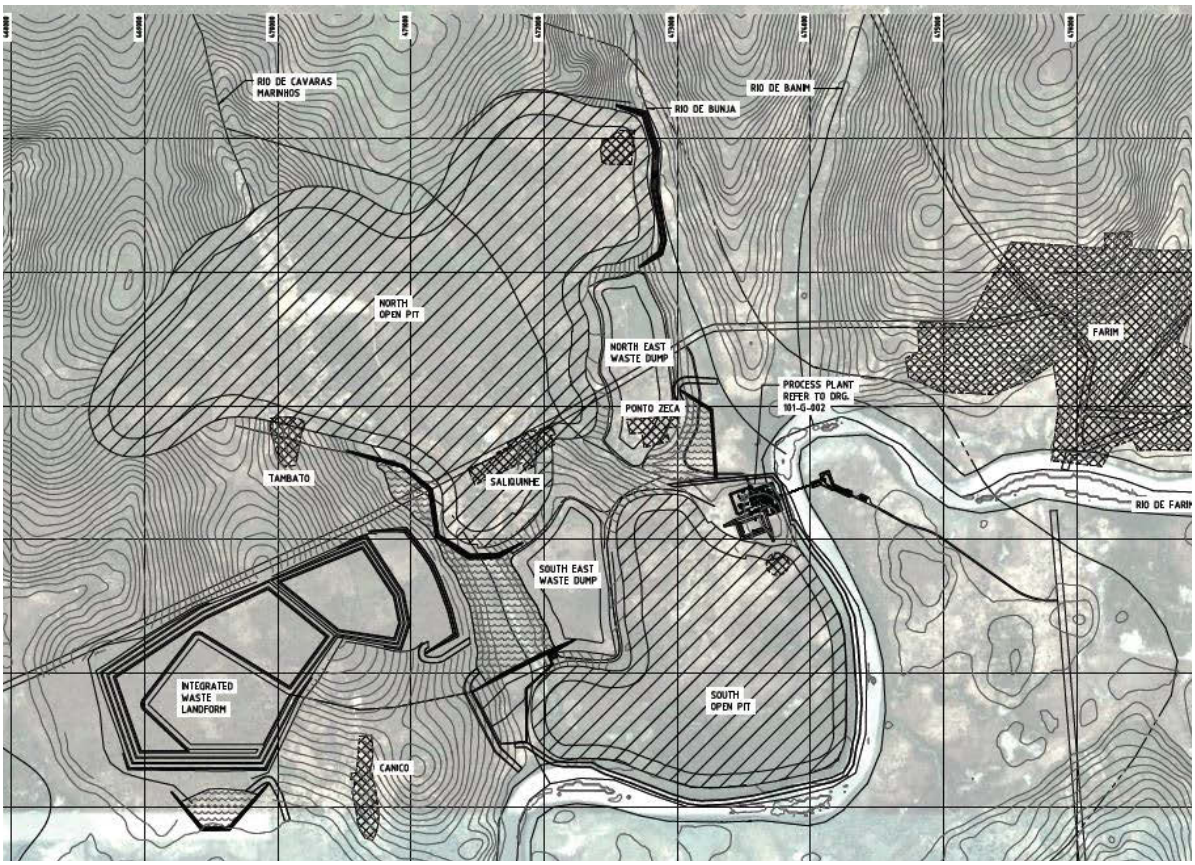

The Mining Lease is granted in terms of a Production Agreement which provides access to surface rights required for mining, processing, and associated infrastructure. An annual fee is payable to the Guinea-Bissau Government to retain the Mining Lease. The phosphate bearing zones underlie the license area; concrete beacons mark the property boundaries.

4.3 Baseline limits of ESIA areas of influence

The ESIA must establish the geographical limits directly and indirectly affected by the project, or Zones of Influence, that could receive extensive or mild impacts as a result of the project. The Zones of Influence will be mapped at an adequate scale (1:50,000) to better describe the project. The Zones will be broken down as follows:

- **Direct Zone of Influence (DZI):** area subject to the direct impacts of the project. As such, its limits shall be accurate in accordance with the physical, biological and social and economic characteristics of the zone;

- **Indirect Zone of Influence (IZI):** real area or potentially threatened by indirect impacts, including physical, biological and social and economic environment that may be impacted by changes taking place in the DZI; and
- **Regional Zone of Influence (RZI):** taking into consideration the importance, sensitivity and vulnerability of the Cacheu River, also in the regional context, the ESIA will give special attention, with a view to analyze reflections of the impacts in the regional hydrographical basins.

5.0 ENVIRONMENTAL ASSESSMENT

Based on available data, including both quantitative and qualitative observations, the ESIA shall describe as accurately as possible, the relevant components of the environment from the biophysical, human and socio-economic perspectives, taking into account the project's challenges and impacts.

The consultant will take into account any anticipated changes that may occur before, during and after the project activities. For this reason, any on-going or planned activity for the project area should be described whenever deemed relevant from an environmental and social perspective.

The environmental study should include the following areas:

a) **Physical Elements:**

- **Meteorology and Air Quality:**

The study should cover the following characteristics:

- Wind: direction and speed (normal and extreme);
- Precipitation (average and maximum);
- Temperature and humidity: average and extreme
- Air Quality: Ambient air quality including the amount of pollutants (particulates, sulphur and nitrogen oxides, carbon monoxide, dust, etc.), pollutants generated by the project should get particular attention.

- **Geology:**

The study will provide an overview of the geology of the area including unique or special features with respect to plate tectonics and seismic activity, potential for landslides and subsidence and mineral resources. Use of maps and photos is encouraged.

- **Geomorfology:**

The study will describe and analyze major rock structures and formations.

- **Topography:**

Description based on maps or photographs of the topography of the study area. Can be achieved with a field trip.

- **Pedology:**

The study will identify soil types in terms of compaction, slope, use in earthworks, and structures. The description should address the project before and after construction and include maps and photographs. It should also address uses including residential, commercial and industrial, mining, transportation, services, amenities, protected areas, historical sites, agricultural areas etc...

The study will also perform a baseline analysis of the metal content, including Cadmium and Uranium, in the soil and overall soil quality. This will include analysis of both the overburden layer and phosphate ore.

- **Hydrogeology:**

The study will describe and analyze the quality and chemical composition of groundwater and the impacts surrounding rock formations.

Geochemistry:

- Analysis of overburden lithologies that have the potential to cause acid mine drainage
- Analysis of tailings material to be stored in the tailings pond.

- **Water:**

The study will address the following areas:

- **Water Balance:** Interconnection amongst rainfall, groundwater, rivers, streams, ponds, lakes etc.;
- **Groundwater System**: Volume of aquifer, extent of main catchment areas, fluctuation in water level according to dry / wet seasons;
- **Drainage systems** / Ditches: natural drainage, sewage, runo-off;

- **Sedimentation:** Soil erosion, and sedimentation of streams;
- **Flood**; delineation of flood plain
- **Water Quality** (surface and groundwater): studies of punctual and diffuse sources of pollution such as industries, sewage, run-off, agriculture and infiltration of salt water into fresh water
- **Surface Water**: volume, flow, seasonal variations including duration and frequency of events, ecological characteristics
- Effects of project on over-all water balance and impact on local users

The review of surface and groundwater must include an analysis of the type and extent of current and future uses of these waters including: quality supply to the population, industry, agriculture, etc.

- Noise and Vibrations

Based on World Health Organization (WHO) guidelines and other international technical standards, the study shall provide information about acceptable levels of noise and vibration. The consultant must identify the initial or *baseline* level*,* identify all equipment and machinery to be used (classify sources); determine acceptable levels and propose Safety and monitoring measures.

- Radioactivity

Baseline studies will be performed on the ore, overburden, final product, tailings, soil and surface and groundwater to better understand the levels of radioactivity that exists. Once the overall data is compiled, the human health risk will be assessed and mitigating factors will then be presented.

b. Biological factors:

For the project area, the study should address the following elements:

1. **Fauna:** list of species (terrestrial, aquatic) classification of species (abundant, rare, endangered, seasonal, uncommon), relative importance, diversity, density in the habitat, food, natural and quasi natural habitats.

2. **Flora:** plant families (both terrestrial and aquatic):

- Productivity e nutrient capacity;
- Agriculture / Livestock: type, importance and extent, land usage, soil quality;
- Natural habitats, fragile habitats including parks and reserves;

- Forestry, aquaculture, and fish farming;
- Statistics on decertification
- Medicinal plants, potential weed species (i.e vectors for disease) or poisonous.

3. **Particularly sensitive areas:**

Description of any particular sensitive areas that could be affected significantly by the proposed project and that are not covered in other subchapters. Amongst these areas, the following could be mentioned:

- Forests (and forestry);
- Areas used in reproduction by aquatic, avian, reptile and invertebrate species
- Wetlands / coastal areas;
- Landfills (stockpile areas for solid and toxic waste)

c. Human Elements:

Description of archaeological, historical and cultural features in the project area including inhabited areas, settlements and trends in new habitations, state of infrastructure and basic amenities. Survey of site with cultural significance such as religious, mythical, ceremonial or that, somehow, are considered of cultural importance.

d. Socio-Economic Factors:

Demographics, ethnic and social organizations, social and economic sectors and their relative importance, sources of income, means of production, use and ownership of land, food and water use, oversight of natural resources, transportation methods, cultural heritage, etc. .

In particular, the study should:

- Compile census data on villages likely to be affected;
- Survey the livelihood and land usage surrounding the likely affected villages;
- ✓ Describe Social institutions: health and education services, housing, recreation areas, etc. .
- ✓ Describe the important social structures, distribution and characteristics of the population, land use and settlement structure of the population, labour force and employment structure (workforce skills available, industries, industrial traditions, etc.), economic production and distribution (type of production, the importance of primary economic activities in services and locally produced goods, existing economic links with other regions, etc.), distribution of income and consumption patterns.

e. Risk Assessment and Hazard Analysis:

The ESIA will investigate the likelihood of accidents or incidents associated with the project and explain how these potential events were determined, possible consequences (including effects on environment), worst-case

scenarios and impacts. The analysis should identify the skills, resources and equipment available to prevent, mitigate or respond to such occurrences.

The study will address the following:

- Identify potentially dangerous products, their location, quantities stored and used.
- Identify possible manner in which equipment malfunction could pose a risk to the environment.
- Identify possible causes of dangerous malfunctions, for example, human error, wear or aging of equipment or infrastructure, corrosion, loss of process control, overload, fire, explosion, floods, etc.
- Quantify the likelihood of any of these dangerous failures and respective consequences (taking into account the possible interactions with discharges from nearby installations).
- In the event that spillages would be inevitable, propose measures to collect and contain in a storage device.

It should be noted that the risk assessment will be included in the study, and the risk register has already been compiled. The purpose of this assessment is to identify both significant and mild risks, as well as well as their probability of occurrence to ensure that actions to mitigate these are part of the project. All stages of the project should be considered including construction, operations, and decommissioning.

f. **Environmental Economic Assessment**

This study should assist decision-makers and/or the Government in understanding the cost / benefit relationship regarding the ecological damage that the project could cause versus the economic benefits that could arise from the project. The economics gains should outweigh the negative impacts,

The economic gains should be higher than negative impacts and mechanisms should be in place to help ensure an equitable distribution of the income deriving from the mining. For this, the project must:

g. Know the environmental aspects susceptible to being effected, estimate an economic impact and, using modeling techniques, calculate the potential environmental damage.

6.0 IDENTIFICATION AND ASSESSMENT OF ENVIRONMENTAL AND SOCIAL IMPACTS

The ESIA must identify all impacts (positive, negative, short-term, long-term, direct and indirect, reversible and irreversible, residual, cumulative, etc.) on the physical, biological and socio-economic environment that could potentially be affected by the Project. The impact assessment should determine the nature of, intensity, extent and duration of environmental changes caused by the project. It must determine the extent of each impact for the company, and the people directly affected, based on criteria such as sensitivity, specificity, rarity, irreversibility and the vulnerability of the habitats covered by the project.

The identification and analysis of the impacts will concentrate on the following elements:

a. **Location of the project and its influence zones:** the identification and assessment of impacts should describe how the physical, biological and socio-economic environment, its resources and habitats will be altered by the project and how these alterations will affect the habits of people living in the affected areas.

b. **Project construction phase:** the consultant should review the environmental and social impact of the delivery and construction of material and equipment for the project. The Impacts related to the influx of workers, risk of accidents, pollution and changes in quality of life of residents and affected natural habitats will also be taken into account.

c. **Operating phase:** the consultant must analyze:

- The impacts of the mining and transport of minerals on the natural landscape, topography, erosion, water quality, air quality, acoustic environment, fauna and flora, the behaviour of living beings, health and safety, the potential use of land resources by the affected inhabitants (livelihood based on products and trade, destruction of trade routes, opening of new territories / routes);
- The direct and/or indirect impacts of phosphate mining and processing on the natural environment (flora, fauna, water resources, etc.), quality of life and well-being, hygiene, health and safety;
- The impacts associated with the influx of workers, the risk of accidents, harm caused and changes to the quality of life, the risks of pollution;
- The study must also assess the impact related with the interference of the project with other similar or different projects in operation or planned for the area.

d. **Decommissioning phase:** the consultant must consider returning the area to its initial state with respect to all excavated areas or considering alternatives such as using some for irrigation, etc. With regard to impacts on the natural environment, the study should pay particular attention to the presence of the Tarrafe de Cacheu Natural Park (PNTC), where the river is a fishing reserve and of great importance at sub-regional level.

e. **From the social point of view, the consultant must highlight:**

- The benefits to the local population in general and for the most vulnerable social groups (women, youth and elderly) in particular;
- The analysis of the options should consider social programs to benefit the local population and information / communication strategy with this population;
- The project's social risks.

f. **Combat Sexually Transmitted Diseases ("STDs") including HIV/AIDS and Behavioural Issues**

The project construction will likely cause the socialization of the local population with foreigners who are attracted by job opportunities or recruited for the project. This new social environment may increase the risk of spreading certain communicable diseases which are problematic such as STDs and HIV / AIDS.

Furthermore, especially during the operating phase, a project of this nature could cause socially undesirable behaviours (such as alcoholism, drug abuse, prostitution, etc.). The consultant must analyze these potential problems in the study.

The consultant should firstly describe the epidemiological situation with regards to STDs/HIV-AIDS, and other sources of diseases throughout the area of influence of the project. The consultant should also analyze the factors that could increase development of socially deviant behaviour (such as alcoholism, gambling etc...).

Once these studies are complete, the consultant should propose the following:

- Baseline study in the project's zones of influence and identification of main elements of the project that could affect the disease rates
- Identification of the proposed actions within the scope of the mining activity that may result in environmental and social impacts;
- Identification, description and assessment of the potential environmental and social impacts, according to pre-defined criteria;
- Formulation of mitigating measures for significant, positive, negative, cumulative and residual impacts;
- Presentation of conclusions and recommendations, based on the findings from the Study;
- Formulation of environmental and social management measures, and environmental monitoring, in support of the Environmental and Social Management Plan and other plans.

7.0 ANALYSIS, IDENTIFICATION OF ALTERNATIVES AND RISK MANAGEMENT

Within the ESIA, the multidisciplinary study team must propose scenarios that can guide decision makers of the best way forward with respect to potential benefits as well as the cost / benefit relationship for both the local and national economies. The study must also consider the losses that the project could create on the physical, biological and socio-economic environment.

Therefore, this analysis should include the "no project" option and include an analysis of advantages and disadvantages. This option should be considered with respect to the project implementation as well as the equipment and operational techniques planned. The second "With project" option should be considered and should also include its advantages and disadvantages.

The ESIA should present the risks and counter-measures that exist throughout the different stages of the project with respect to the environment and social sustainability.

8.0 MEASURES PROPOSED

Once the identification and assessment of the Project's impacts are in place, the consultant should propose mitigating strategies and monitoring plans of the positive, negative, cumulative and residual impacts of the project with a view to maximizing the positive and minimizing the negative, and in support of both local and national development.

With regard to the environment, the ESIA must:

- Specify the actions, structures, corrections and contributions foreseen for the different phases/ stages to prevent, reduce or eliminate the negative impacts. If necessary, the study must describe the measures foreseen to promote or maximize positive impacts. Regarding the negative impacts, it must present compensation measures.
- In particular, the study shall propose a closure plan for the end of mine life that is suitable for the zones of influence.

From the social point of view, the study shall propose the following measures:

- Increase involvement of locals by recruitment, and ensure that the most vulnerable social groups will not be excluded from access to the new opportunities created by the project (women, youth and elderly);
- Involve the local population in the creation and implementation of various social programs to ensure social responsibility. Special attention should be paid to providing the communities with access to relevant project information.
- Reinforce security and safety, minimizing the social risks of the project.

The ESIA should include a clear and feasible strategy for the prevention of the spread of STD and HIV / AIDS as well as socially deviant behaviour on the part of the projects workers and the local population. This strategy should involve local health stakeholders, and especially NGOs involved with fieldwork for general health. The study should also assess, to the extent possible, the costs of these environmental and social impacts prevention, mitigation, compensation and monitoring measures.

9.0 ENVIRONMENTAL AND SOCIAL MANAGEMENT PLAN

Once the various project activities and stages have been assessed with respect to the environmental and social impacts, the study should propose an Environmental and Social Management Plan (ESMP). The ESMP will include the avoidance / mitigation measures, compensation and monitoring that will be in place, leading indicators (including target range for various readings), based on SMART criteria. This approach should enable an effective monitoring and evaluation system to be carried out by CAIA.

The effectiveness of both the Company's and Government's policies is dependent on the quality of the ESMP for the project. The ESIA should serve as a guide for GB Minerals AG for its operation and environmental management through these management plans by providing a framework for the work conditions required as a result of these measures. ESMP for the Project should contain the following structure:

1. Phase;
2. Component;
3. Activity;
4. Impact;
5. Nature (Positive and Negative);
6. Attenuation Measures;
7. Targets;
8. Indicators;
9. Execution program;
10. Person Responsible for Following-up; and
11. Cost of the measures.

10.0 ESIA CONCLUSIONS AND RECOMMENDATIONS

Based on the overall assessment, using statistical methods and scenario analysis, the ESIA must provide conclusions and recommendations as to whether or not the Farim Phosphate Project can operate reasonably with respect to the environment.

With the scientific / technical information provided, the ESIA should assist authorities in their decision-making and approval processes. Consequently, once complete, the ESIA should submit recommendations for a successful implementation of the ESMP.

10.1 Institutional Arrangement for Follow-up and Monitoring

The client must review and propose various institutions that could be implicated in the project and the roles they can play. This review must include public and private institutes, NGOs and local associations and explain how they can help participate in promoting a successful project, particularly in terms of environmental policy adopted by GB Minerals as well as those included in the country's environmental authorities. The roles of various government institutions must also be discussed

11.0 REFERENCES

Law 10/2010 of September 24th (the Environmental Assessment Law)

APPENDIX 1-D

TABLE OF CONFORMANCE TO TERMS OF REFERENCE

(12 Pages)

Knight Piésold CONSULTING

TABLE 1D.1

GB MINERALS LTD.
FARIM PHOSPHATE PROJECT

ENVIRONMENTAL AND SOCIAL IMPACT ASSESSMENT
VOLUME 1 - INTRODUCTION TO THE ASSESSMENT

ESIA CONCORDANCE WITH THE CAIA TERMS OF REFERENCE

Print Sep/15/15 7:52:48

Section	Terms of Reference	ESIA Location	Comment
1.0	**Preamble -** No Requirements.	n/a	
2.0	**Introduction -** No Requirements.	n/a	
2.1	**Justification for the Study -** No Requirements.	n/a	
2.2	**Objectives for the Study**		
2.2.1	**General Objectives**		
	The purpose of the Terms of Reference is to establish the requirements to fully assess the project's impact on the biophysical, human and socio-economic environment and to propose measures to maximize the positive impacts, and minimize the negative ones. The assessment should include a risk assessment (including extreme events - floods, cyclones, and conflicts) of the project. The assessment will be used as a basis for the Government's approval regarding the social and environmental viability of the project.	Sections 21 and 22 (Volume 2); TSD-15 and TSD-16	Human health and ecological risk assessment (HHERA) summarized in Section 21 and presented in TSD-15 and TSD-16; major hazards risks assessed in Section 22.
2.2.2	**Specific Objectives**		
	Guide the Government in decision making regarding the environmental and social viability of the project.	n/a	
	Prepare a high quality assessment with well-established control measures and indicators for follow-up and monitoring.	All volumes	
	Identify and classify potential risks due to natural and human factors on aspects of the project.	Sections 21 and 22 (Volume 2)	
	Propose an Environmental and Social Management Plan with effective measures to minimize the negative effects and maximize the positive.	Volume 3	
	Propose a flexible and functional monitoring and assessment structure.		
	Include best practices with respect to Industrial Hygiene, Health and Safety, as recommended by international standards such as the WHO, EU, etc.	Volume 3	Adopted standards include those from the International Finance Corporation (IFC), World Health Organization, and water quality standards from other jurisdictions.
2.3	**Methodology**		
	The multidisciplinary Team responsible for carrying out the ESIA for the Project will use appropriate scientific methodology including a thorough literature review, case studies and field surveys. The surveys will be carried out with direct, primary sources (such as fieldwork and surveys), and secondary sources (from existing research or further analysis of primary research). Direct research will include the development of questionnaires / guidelines to be used in social and economic surveys for the project including public consultation.		Baseline study methodologies are described in the respective baseline reports (included as Technical Supporting Documents in Volume 4). Impact assessment methods are described in the subject area assessments in Sections 7 through 20 in Volume 3.

Knight Piésold CONSULTING

TABLE 1D.1

GB MINERALS LTD.
FARIM PHOSPHATE PROJECT

ENVIRONMENTAL AND SOCIAL IMPACT ASSESSMENT
VOLUME 1 - INTRODUCTION TO THE ASSESSMENT

ESIA CONCORDANCE WITH THE CAIA TERMS OF REFERENCE

Print Sep/15/15 7:52:48

Section	Terms of Reference	ESIA Location	Comment
	Public Consultation will record the concerns and expectations of the population in the project's zones of influence.	Section 5 (Volume 1) and Appendix 1G	
	Secondary sources should include a review of any documented consultations, international standards and a world wide web search as well as "Ad hoc" methods, matrices of interacting elements, maps of overlapping factors; mathematical simulations or combinations of methods. The study will also include a justification for the study methodology used.	Section 24	Secondary sources for Volumes 1 and 2 are presented in Section 24 (Volume 2). Secondary sources referenced in both the ESMP (Volume 3, Section 7), and within references sections of the individual management plans (appendices to Volume 3).
	The information collected on the field will be organized and interpreted scientifically. Thus, the study will not only be descriptive, but will include both a quantitative and qualitative analysis of important criteria that will accurately depict the impacts of the proposed project as well as presenting measures to manage the environmental and social sustainability. Such work will include figures, photographs and maps of adequate scale to effectively illustrate the environment during the various stages of the project (construction, operation and decommissioning.	All volumes	
2.4	**The ESIA Contributors**		
	The ESIA should be performed by an internationally recognized consultancy consisting of multi-disciplined team with experience in the mining sector and related areas. The objective is to try to cover a large number of environmental and social components to prepare a complete and accurate description of the project's various stages. The topics to be covered will also help to determine the level of sensitivity and vulnerability of the environmental and social components that exist in the project's zones of influence.	Section 1.6 and Appendix 1E (Volume 1)	The ESIA contributors are listed in Appendix 1E. Knight Piésold's relevant ESIA experience is described in Section 1.6 (Volume 1).
	As such, the multidisciplinary team should include the following disciplines: • An environmental geologist or mining environmentalist • An environmental geologist/hydrogeologist • An environmentalist specializing in Natural Resources Management and management of forest ecosystems • A specialist in security management, pollution and risks • A health specialist • A marine biologist • A sociologist • A social economist • An archaeologist	Same as above	Same as above. The specialists required by this item are identified in Table 1E.1 in Appendix 1E.

Knight Piésold CONSULTING

TABLE 1D.1

GB MINERALS LTD.
FARIM PHOSPHATE PROJECT

ENVIRONMENTAL AND SOCIAL IMPACT ASSESSMENT
VOLUME 1 - INTRODUCTION TO THE ASSESSMENT

ESIA CONCORDANCE WITH THE CAIA TERMS OF REFERENCE

Print Sep/15/15 7:52:48

Section	Terms of Reference	ESIA Location	Comment
2.5	**Structure of the ESIA**		
	The ESIA shall be structured in separate sections in accordance with the requirements of Article no. 16 (Non-Technical Summary, Environmental and Social Impact Assessment Report and Environmental and Social Management Plan). The ESIA must also include the Supplementary studies required by CAIA (namely the Environmental Economic Assessment and Risk Analysis and Hazard Studies). The ESIA for the Farim Phosphate Project must also respect the provisions in Articles 17 to 20 of Law No. 10/2010 of 24 September.	See comment	The ESIA consists of the following: Executive Summary Volume 1 - Introduction to the Assessment Volume 2 - Impact Assessments Volume 3 - Environmental and Social Management Plan Volume 4 - Technical Supporting Documents
2.5.1	**Political, Institutional and Legislative Framework**		
	In this section, the ESIA should cover the full political, legal, and institutional framework that will apply to the Project and that will govern the approval for responsible mining of the Farim deposit, approval that will consider the strategic, cumulative and residual social and environmental impacts as well.	Section 3 and Appendix 1F (Volume 1)	
	i) Political and institutional - identify / propose a functional institutional political framework for institutions responsible for the environmental policy and the existing interactions with other institutions within relevant framework. Determine, in a clear and objective manner, the participation and responsibility of each institution in the implementation process of the measures contained in the Environmental Management Plan (ESMP) and Action Plan for involuntary Resettlement (APR).	Same as above	
	ii) Legal Framework – the multidisciplinary team will share the information from the ESIA national legal aspect (laws, regulations, and technical standards) applicable to the mining sector and environmental protection. Include International guidelines, such as treaties and signed conventions ratified by Guinea-Bissau, the technical standards which are required by the development partners such as UEMOA, ECOWAS, BOAD (West African Development Bank), World Bank, WHO, IMF, etc., applicable to mining exploration and relevant to the Farim project process.	Same as above	Detailed tables listing applicable national legislation and treaties/conventions are provided in Appendix 1F.
3.0	**General Description of Project Activities**	n/a	
3.1	**Project Description** - No Requirements.	n/a	
3.2	**Phases of the Project** - No Requirements .	n/a	
3.3	**Mining Method** - No Requirements.	n/a	
3.4	**Equipment and Materials to be Utilized** - No Requirements.	n/a	
4.0	**Project Location and Zones of Influence**	n/a	
4.1	**Project Location**		
	The ESIA will review in more detail the location of "tabancas" (villages) around the mine site and in the Farim Sector.	Section 19.2 (Volume 2)	
4.2	**Concession Area -** No Requirements.	n/a	
4.3	**Baseline limits of ESIA areas of influence**		

Knight Piésold CONSULTING

TABLE 1D.1

GB MINERALS LTD.
FARIM PHOSPHATE PROJECT

ENVIRONMENTAL AND SOCIAL IMPACT ASSESSMENT
VOLUME 1 - INTRODUCTION TO THE ASSESSMENT

ESIA CONCORDANCE WITH THE CAIA TERMS OF REFERENCE

Print Sep/15/15 7:52:48

Section	Terms of Reference	ESIA Location	Comment
	The ESIA must establish the geographical limits directly and indirectly affected by the project, or Zones of Influence, that could receive extensive or mild impacts as a result of the project. The Zones of Influence will be mapped at an adequate scale (1:50,000) to better describe the project. Direct Zone of Influence (DZI): area subject to the direct impacts of the project. As such, its limits shall be accurate in accordance with the physical, biological and social and economic characteristics of the zone. Indirect Zone of Influence (IZI): real area or potentially threatened by indirect impacts, including physical, biological and social and economic environment that may be impacted by changes taking place in the DZI. Regional Zone of Influence (RZI): taking into consideration the importance, sensitivity and vulnerability of the Cacheu River, also in the regional context, the ESIA will give special attention, with a view to analyze reflections of the impacts in the regional hydrographical basins.	Section 1.1 and Figure 1.2 (Volume 1)	The direct, indirect and regional zones of influence are described generally in Section 1.1 and in more detail by subject area in the impact assessments (Sections 7 through 20 in Volume 2).
5.0	**Environmental Assessment**		
	Based on available data, including both quantitative and qualitative observations, the ESIA shall describe as accurately as possible, the relevant components of the environment from the biophysical, human and socio-economic perspectives, taking into account the project's challenges and impacts.	All volumes	
	The consultant will take into account any anticipated changes that may occur before, during and after the project activities. For this reason, any on-going or planned activity for the project area should be described whenever deemed relevant from an environmental and social perspective.	Section 20 (Volume 2)	Cumulative impacts assessed in Section 20.
	Physical Elements		
	Meteorology and Air Quality: The study should cover the following characteristics: • Wind: direction and speed (normal and extreme) • Precipitation (average and maximum) • Temperature and humidity: average and extreme • Air Quality: Ambient air quality including the amount of pollutants (particulates, sulphur and nitrogen oxides, carbon monoxide, dust, etc.), pollutants generated by the project should get particular attention	Section 7.1 (Volume 2); TSD-1, TSD-2 and TSD-3 (Volume 4)	Meteorology and air quality is described in the previous baseline report (TSD-1) with updates presented in TSD-2 and TSD-3.
	Geology: The study will provide an overview of the geology of the area including unique or special features with respect to plate tectonics and seismic activity, potential for landslides and subsidence and mineral resources. Use of maps and photos is encouraged.	Section 2.4.1 (Volume 1)	

Knight Piésold CONSULTING

TABLE 1D.1

GB MINERALS LTD.
FARIM PHOSPHATE PROJECT

ENVIRONMENTAL AND SOCIAL IMPACT ASSESSMENT
VOLUME 1 - INTRODUCTION TO THE ASSESSMENT

ESIA CONCORDANCE WITH THE CAIA TERMS OF REFERENCE

Print Sep/15/15 7:52:48

Section	Terms of Reference	ESIA Location	Comment
	Geomorphology: The study will describe and analyze major rock structures and formations.	Section 10	River morphology
	Topography: Description based on maps or photographs of the topography of the study area. Can be achieved with a field trip.	Sections 1.4.1 (setting), Section 17 (landscape)	
	Pedology: The study will identify soil types in terms of compaction, slope, use in earthworks, and structures. The description should address the project before and after construction and include maps and photographs. It should also address uses including residential, commercial and industrial, mining, transportation, services, amenities, protected areas, historical sites, agricultural areas etc.	Section 12 (Volume 2); Appendix 3L (Volume 3); TSD-1 (Volume 4)	Soils and land capability assessment, Mine Reclamation and Closure Plan, and Golder 2014 baseline report
	Hydrogeology: The study will describe and analyze the quality and chemical composition of groundwater and the impacts surrounding rock formations.	Section 9 (Volume 2) and TSD-5 (Volume 4)	
	Geochemistry: • Analysis of overburden lithologies that have the potential to cause acid mine drainage • Analysis of tailings material to be stored in the tailings pond.	Section 2.4.2, TSD-7a and TSD-7b	
	Water:		
	Water Balance: Interconnection amongst rainfall, groundwater, rivers, streams, ponds, lakes etc.	Section 11 (Volume 2); TSD-4 (Volume 4)	
	Groundwater System: Volume of aquifer, extent of main catchment areas, fluctuation in water level according to dry / wet seasons	Volume 9, TSD-1, TSD-5	
	Drainage systems / Ditches: natural drainage, sewage, run-off	Volume 3, Appendix 3F	
	• Sedimentation: Soil erosion, and sedimentation of streams	Sections 11 and 12 (Volume 2); Appendix 3E (Volume 3)	
	• Flood; delineation of flood plain	Figure 1.3 (Volume 1)	
	• Water Quality (surface and groundwater): studies of punctual and diffuse sources of pollution such as industries, sewage, run-off, agriculture and infiltration of salt water into fresh water	Section 11 (Volume 2)	

Knight Piésold CONSULTING

TABLE 1D.1

GB MINERALS LTD.
FARIM PHOSPHATE PROJECT

ENVIRONMENTAL AND SOCIAL IMPACT ASSESSMENT
VOLUME 1 - INTRODUCTION TO THE ASSESSMENT

ESIA CONCORDANCE WITH THE CAIA TERMS OF REFERENCE

Print Sep/15/15 7:52:48

Section	Terms of Reference	ESIA Location	Comment
	• Surface Water: volume, flow, seasonal variations including duration and frequency of events, ecological characteristics	Section 11 (Volume 2), TSD-3	
	• Effects of project on over-all water balance and impact on local users	Section 11 (Volume 2)	
	• Noise and Vibrations Based on World Health Organization (WHO) guidelines and other international technical standards, the study shall provide information about acceptable levels of noise and vibration. The consultant must identify the initial or baseline level, identify all equipment and machinery to be used (classify sources); determine acceptable levels and propose Safety and monitoring measures.	Section 15 (Volume 2) and TSD-10 (Volume 4)	
	• Radioactivity Baseline studies will be performed on the ore, overburden, final product, tailings, soil and surface and groundwater to better understand the levels of radioactivity that exists. Once the overall data is compiled, the human health risk will be assessed and mitigating factors will then be presented.	Section 21 (Volume 2) and TSD-16 (Volume 4)	
	Biological Factors		
	1. Fauna: list of species (terrestrial, aquatic) classification of species (abundant, rare, endangered, seasonal, uncommon), relative importance, diversity, density in the habitat, food, natural and quasi natural habitats.	Section 13 (Volume 2) and TSD-8 (Volume 4)	
	2. Flora: plant families (both terrestrial and aquatic): • Productivity e nutrient capacity • Agriculture / Livestock: type, importance and extent, land usage, soil quality • Natural habitats, fragile habitats including parks and reserves • Forestry, aquaculture, and fish farming • Statistics on decertification • Medicinal plants, potential weed species (i.e. vectors for disease) or poisonous	Section 13 (Volume 2) and TSD-8 (Volume 4)	
	3. Particularly sensitive areas: Description of any particular sensitive areas that could be affected significantly by the proposed project and that are not covered in other subchapters. Amongst these areas, the following could be mentioned: • Forests (and forestry) • Areas used in reproduction by aquatic, avian, reptile and invertebrate species • Wetlands / coastal areas • Landfills (stockpile areas for solid and toxic waste)	Section 13 (Volume 2) and TSD-8 (Volume 4)	

Knight Piésold CONSULTING

TABLE 1D.1

GB MINERALS LTD.
FARIM PHOSPHATE PROJECT

ENVIRONMENTAL AND SOCIAL IMPACT ASSESSMENT
VOLUME 1 - INTRODUCTION TO THE ASSESSMENT

ESIA CONCORDANCE WITH THE CAIA TERMS OF REFERENCE

Print Sep/15/15 7:52:48

Section	Terms of Reference	ESIA Location	Comment
	Human Elements		
	Description of archaeological, historical and cultural features in the project area including inhabited areas, settlements and trends in new habitations, state of infrastructure and basic amenities. Survey of site with cultural significance such as religious, mythical, ceremonial or that, somehow, are considered of cultural importance.	Section 16 (Volume 2); TSD-1, TSD-11, TSD-12)	
	Socio-Economic Factors		
	Demographics, ethnic and social organizations, social and economic sectors and their relative importance, sources of income, means of production, use and ownership of land, food and water use, oversight of natural resources, transportation methods, cultural heritage, etc. In particular, the study should: • Compile census data on villages likely to be affected • Survey the livelihood and land usage surrounding the likely affected villages • Describe Social institutions: health and education services, housing, recreation areas, etc. • Describe the important social structures, distribution and characteristics of the population, land use and settlement structure of the population, labour force and employment structure (workforce skills available, industries, industrial traditions, etc.), economic production and distribution (type of production, the importance of primary economic activities in services and locally produced goods, existing economic links with other regions, etc.), distribution of income and consumption patterns	Section 19 (Volume 2); TSD-14	
	Risk Assessment and Hazard Analysis		
	The ESIA will investigate the likelihood of accidents or incidents associated with the project and explain how these potential events were determined, possible consequences (including effects on environment), worst-case scenarios and impacts. The analysis should identify the skills, resources and equipment available to prevent, mitigate or respond to such occurrences. Identify potentially dangerous products, their location, quantities stored and used. Identify possible manner in which equipment malfunction could pose a risk to the environment. Identify possible causes of dangerous malfunctions, for example, human error, wear or aging of equipment or infrastructure, corrosion, loss of process control, overload, fire, explosion, floods, etc. Quantify the likelihood of any of these dangerous failures and respective consequences (taking into account the possible interactions with discharges from nearby installations). In the event that spillages would be inevitable, propose measures to collect and contain in a storage device. It should be noted that the risk assessment will be included in the study, and the risk register has already been compiled. The purpose of this assessment is to identify both significant and mild risks, as well as well as their probability of occurrence to ensure that actions to mitigate these are part of the project. All stages of the project should be considered including construction, operations, and decommissioning.	Sections 21 and 22 (Volume 2); Appendix 3K (Volume 3)	

Knight Piésold CONSULTING

TABLE 1D.1

GB MINERALS LTD.
FARIM PHOSPHATE PROJECT

ENVIRONMENTAL AND SOCIAL IMPACT ASSESSMENT
VOLUME 1 - INTRODUCTION TO THE ASSESSMENT

ESIA CONCORDANCE WITH THE CAIA TERMS OF REFERENCE

Print Sep/15/15 7:52:48

Section	Terms of Reference	ESIA Location	Comment
	Environmental Economic Assessment		
	This study should assist decision-makers and/or the Government in understanding the cost / benefit relationship regarding the ecological damage that the project could cause versus the economic benefits that could arise from the project. The economics gains should outweigh the negative impacts, The economic gains should be higher than negative impacts and mechanisms should be in place to help ensure an equitable distribution of the income deriving from the mining. For this, the project must: g. Know the environmental aspects susceptible to being effected, estimate an economic impact and, using modeling techniques, calculate the potential environmental damage.	Section 19 (Volume 2); TSD-14	
6.0	**Identification and Assessment of Environmental and Social Impacts**		
	The ESIA must identify all impacts (positive, negative, short-term, long-term, direct and indirect, reversible and irreversible, residual, cumulative, etc.) on the physical, biological and socio-economic environment that could potentially be affected by the Project. The impact assessment should determine the nature of, intensity, extent and duration of environmental changes caused by the project. It must determine the extent of each impact for the company, and the people directly affected, based on criteria such as sensitivity, specificity, rarity, irreversibility and the vulnerability of the habitats covered by the project.	Volume 2	
	a. Location of the project and its influence zones: the identification and assessment of impacts should describe how the physical, biological and socio-economic environment, its resources and habitats will be altered by the project and how these alterations will affect the habits of people living in the affected areas.	Volume 2	
	b. Project construction phase: the consultant should review the environmental and social impact of the delivery and construction of material and equipment for the project. The Impacts related to the influx of workers, risk of accidents, pollution and changes in quality of life of residents and affected natural habitats will also be taken into account.	Volume 2	
	c. Operating phase: the consultant must analyze: The impacts of the mining and transport of minerals on the natural landscape, topography, erosion, water quality, air quality, acoustic environment, fauna and flora, the behaviour of living beings, health and safety, the potential use of land resources by the affected inhabitants (livelihood based on products and trade, destruction of trade routes, opening of new territories / routes); The direct and/or indirect impacts of phosphate mining and processing on the natural environment (flora, fauna, water resources, etc.), quality of life and well-being, hygiene, health and safety; The impacts associated with the influx of workers, the risk of accidents, harm caused and changes to the quality of life, the risks of pollution; The study must also assess the impact related with the interference of the project with other similar or different projects in operation or planned for the area.	Volume 2	

Knight Piésold CONSULTING

TABLE 1D.1

GB MINERALS LTD.
FARIM PHOSPHATE PROJECT

ENVIRONMENTAL AND SOCIAL IMPACT ASSESSMENT
VOLUME 1 - INTRODUCTION TO THE ASSESSMENT

ESIA CONCORDANCE WITH THE CAIA TERMS OF REFERENCE

Print Sep/15/15 7:52:48

Section	Terms of Reference	ESIA Location	Comment
	d. Decommissioning phase: the consultant must consider returning the area to its initial state with respect to all excavated areas or considering alternatives such as using some for irrigation, etc. With regard to impacts on the natural environment, the study should pay particular attention to the presence of the Tarrafe de Cacheu Natural Park (PNTC), where the river is a fishing reserve and of great importance at sub-regional level.	Sections 11 and 14 (Volume 2)	
	e. From the social point of view, the consultant must highlight: The benefits to the local population in general and for the most vulnerable social groups (women, youth and elderly) in particular; The analysis of the options should consider social programs to benefit the local population and information / communication strategy with this population; The project's social risks.	Section 19 (Volume 2)	
	f. Combat Sexually Transmitted Diseases (“STDs”) including HIV/AIDS and Behavioural Issues	Section 19 (Volume 2)	
	The project construction will likely cause the socialization of the local population with foreigners who are attracted by job opportunities or recruited for the project. This new social environment may increase the risk of spreading certain communicable diseases which are problematic such as STDs and HIV / AIDS. Furthermore, especially during the operating phase, a project of this nature could cause socially undesirable behaviours (such as alcoholism, drug abuse, prostitution, etc.). The consultant must analyze these potential problems in the study. The consultant should firstly describe the epidemiological situation with regards to STDs/HIV-AIDS, and other sources of diseases throughout the area of influence of the project. The consultant should also analyze the factors that could increase development of socially deviant behaviour (such as alcoholism, gambling etc...). Once these studies are complete, the consultant should propose the following: • Baseline study in the project’s zones of influence and identification of main elements of the project that could affect the disease rates • Identification of the proposed actions within the scope of the mining activity that may result in environmental and social impacts • Identification, description and assessment of the potential environmental and social impacts, according to pre-defined criteria • Formulation of mitigating measures for significant, positive, negative, cumulative and residual impacts • Presentation of conclusions and recommendations, based on the findings from the Study • Formulation of environmental and social management measures, and environmental monitoring, in support of the Environmental and Social Management Plan and other plans	Section 19 (Volume 2)	

Knight Piésold CONSULTING

TABLE 1D.1

GB MINERALS LTD.
FARIM PHOSPHATE PROJECT

ENVIRONMENTAL AND SOCIAL IMPACT ASSESSMENT
VOLUME 1 - INTRODUCTION TO THE ASSESSMENT

ESIA CONCORDANCE WITH THE CAIA TERMS OF REFERENCE

Print Sep/15/15 7:52:48

Section	Terms of Reference	ESIA Location	Comment
7.0	**Analysis, Identification of Alternatives and Risk Management**		
	Within the ESIA, the multidisciplinary study team must propose scenarios that can guide decision makers of the best way forward with respect to potential benefits as well as the cost / benefit relationship for both the local and national economies. The study must also consider the losses that the project could create on the physical, biological and socio-economic environment. Therefore, this analysis should include the "no project" option and include an analysis of advantages and disadvantages. This option should be considered with respect to the project implementation as well as the equipment and operational techniques planned. The second "With project" option should be considered and should also include its advantages and disadvantages. The ESIA should present the risks and counter-measures that exist throughout the different stages of the project with respect to the environment and social sustainability.	Section 4 (Volume 1)	
8.0	**Measures Proposed**		
	Once the identification and assessment of the Project's impacts are in place, the consultant should propose mitigating strategies and monitoring plans of the positive, negative, cumulative and residual impacts of the project with a view to maximizing the positive and minimizing the negative, and in support of both local and national development.	Sections 7 through 20 (Volume 2); Appendix 3A (Volume 3)	
	• Specify the actions, structures, corrections and contributions foreseen for the different phases/ stages to prevent, reduce or eliminate the negative impacts. If necessary, the study must describe the measures foreseen to promote or maximize positive impacts. Regarding the negative impacts, it must present compensation measures.	Sections 7 through 20 (Volume 2); Appendix 3A (Volume 3)	
	• In particular, the study shall propose a closure plan for the end of mine life that is suitable for the zones of influence.	Appendix 3L (Volume 3)	
	• Increase involvement of locals by recruitment, and ensure that the most vulnerable social groups will not be excluded from access to the new opportunities created by the project (women, youth and elderly);	Section 19 (Volume 2)	
	• Involve the local population in the creation and implementation of various social programs to ensure social responsibility. Special attention should be paid to providing the communities with access to relevant project information.	Section 19 (Volume 2)	
	• Reinforce security and safety, minimizing the social risks of the project.	Section 19 (Volume 2); Appendix 3H (Volume 3)	

Knight Piésold CONSULTING

TABLE 1D.1

GB MINERALS LTD.
FARIM PHOSPHATE PROJECT

ENVIRONMENTAL AND SOCIAL IMPACT ASSESSMENT
VOLUME 1 - INTRODUCTION TO THE ASSESSMENT

ESIA CONCORDANCE WITH THE CAIA TERMS OF REFERENCE

Print Sep/15/15 7:52:48

Section	Terms of Reference	ESIA Location	Comment
	The ESIA should include a clear and feasible strategy for the prevention of the spread of STD and HIV / AIDS as well as socially deviant behaviour on the part of the projects workers and the local population. This strategy should involve local health stakeholders, and especially NGOs involved with fieldwork for general health. The study should also assess, to the extent possible, the costs of these environmental and social impacts prevention, mitigation, compensation and monitoring measures.	Section 19 (Volume 2); Appendix 3H (Volume 3)	
9.0	**Environmental and Social Management Plan**		
	Once the various project activities and stages have been assessed with respect to the environmental and social impacts, the study should propose an Environmental and Social Management Plan (ESMP). The ESMP will include the avoidance / mitigation measures, compensation and monitoring that will be in place, leading indicators (including target range for various readings), based on SMART criteria. This approach should enable an effective monitoring and evaluation system to be carried out by CAIA.	Volume 3, including Appendices	
	The effectiveness of both the Company's and Government's policies is dependent on the quality of the ESMP for the project. The ESIA should serve as a guide for GB Minerals AG for its operation and environmental management through these management plans by providing a framework for the work conditions required as a result of these measures. ESMP for the Project should contain the following structure: 1. Phase 2. Component 3. Activity 4. Impact 5. Nature (Positive and Negative) 6. Attenuation Measures 7. Targets 8. Indicators 9. Execution program 10. Person Responsible for Following-up 11. Cost of the measures	Volume 3, including Appendices	

Knight Piésold CONSULTING

TABLE 1D.1

GB MINERALS LTD.
FARIM PHOSPHATE PROJECT

ENVIRONMENTAL AND SOCIAL IMPACT ASSESSMENT
VOLUME 1 - INTRODUCTION TO THE ASSESSMENT

ESIA CONCORDANCE WITH THE CAIA TERMS OF REFERENCE

Print Sep/15/15 7:52:48

Section	Terms of Reference	ESIA Location	Comment
10.0	**ESIA Conclusion and Recommendations**		
	Based on the overall assessment, using statistical methods and scenario analysis, the ESIA must provide conclusions and recommendations as to whether or not the Farim Phosphate Project can operate reasonably with respect to the environment. With the scientific / technical information provided, the ESIA should assist authorities in their decision-making and approval processes. Consequently, once complete, the ESIA should submit recommendations for a successful implementation of the ESMP.	Section 23 (Volume 2)	
10.1	**Institutional Arrangement for Follow-up and Monitoring**		
	The client must review and propose various institutions that could be implicated in the project and the roles they can play. This review must include public and private institutes, NGOs and local associations and explain how they can help participate in promoting a successful project, particularly in terms of environmental policy adopted by GB Minerals as well as those included in the country's environmental authorities. The roles of various government institutions must also be discussed.	Section 3.6 (Volume 3)	

REV	DATE	DESCRIPTION	PREP'D	RVW'D
0	15SEP'15	ISSUED WITH REPORT NB301-520/2-1	AMH	RAC

APPENDIX 1-E

ESIA TEAM

Table 1E.1 - ESIA Team Leads - Qualification Summary (3 pages)
Resumes for ESIA Team Leads (21 pages)

Knight Piésold CONSULTING

TABLE 1E.1

GB MINERALS LTD.
FARIM PHOSPHATE PROJECT

ENVIRONMENTAL AND SOCIAL IMPACT ASSESSMENT
VOLUME 1 - INTRODUCTION TO THE ASSESSMENT

ESIA TEAM LEADS - QUALIFICATION SUMMARY

Print: 14/09/2015 3:51:00 PM

Name	Role on Farim ESIA	Qualifications
Rob Mercer	Geological and mining engineer, conducted final approval reviews of ESIA within KP	Professional Engineer; Ph.D. Mining Engineering Managing principal for KP North Bay; over 25 years of experience providing engineering services to the mining industry. Specializations include rock mechanics and geomechanical site investigations. Provided senior review of ESIA assignments in Canada and abroad.
Steve Aiken	Geological Engineer[1], conducted final approval reviews of ESIA within KP; technical support in the areas of geochemistry, mine closure planning and natural hazards risk assessment	Professional Engineer; B.A.Sc. Geological Engineering Senior environmental engineer; 25 years of experience providing environmental and engineering services to the mining industry. Specializations include geochemistry, hydrogeology; water management and mine closure planning. Participated and provided senior input and review in ESIA assignments in Canada and Africa.
Richard Cook	ESIA Project Manager, senior reviewer, lead on groundwater, surface water and soils (pollution) assessments[1]	Professional Geoscientist (Limited); B.Sc.(Hon.) Environmental Science Senior ESIA practitioner and project manager; 19 years of experience, with specializations in hydrology, water quality, and hydrogeology. Managed or participated in a number of ESIA assignments in Africa (Eritrea, Zambia and Madagascar) and in Canada.
Jason Plamondon	ESIA Author, project description, mine closure plan, groundwater, surface water and soils assessments	B.Sc. Biology(Hon.) and B.Sc.(Hon.) Environmental Science and Physical Geography Intermediate environmental scientist; 9 years of experience in environmental data collection, analysis and reporting. He has a strong background in freshwater aquatics, ESIA report coordination and production, and mine closure planning.
Anna Hutchison	Air quality, noise, traffic, landscape, and socioeconomic impact assessments, public consultation summary	MES Environmental Studies Socio-economic Consultant; 7 years of experience in socio-economic data collection and impact assessment, public consultation and land use/traditional knowledge studies. Project experience in Eritrea and Canada.
Timothy Rowles	Geochemistry lead	Professional Geoscientist, B.Sc., M.Sc. Environmental Geology Geoscientist specializing in the geochemical characterization of tailings and waste rock and the design of acid mine drainage mitigation measures, waste dumps, tailings storage facilities and water management systems. Relevant West African experience in Republic of Guinea, Ghana, Burkina Faso and Cameroon.
Alejandro Delgado	Air quality and noise modelling	B.Eng. Atmospheric Engineering Atmospheric engineer; 5 years of experience in air quality and noise baseline data collection and numerical modelling. Fluent in the use of CALMET and CALPUFF and other air quality modelling software, as well as USEPA and other noise modelling software.
Tom Watkin	Hydrogeology lead	Professional Geoscientist, M.Sc. Hydrogeology Hydrogeologist specializing in water supply, operational mine dewatering and groundwater impact assessments. Relevant experience in West Africa, Australia, New Zealand and Europe.

Knight Piésold CONSULTING

TABLE 1E.1

GB MINERALS LTD.
FARIM PHOSPHATE PROJECT

ENVIRONMENTAL AND SOCIAL IMPACT ASSESSMENT
VOLUME 1 - INTRODUCTION TO THE ASSESSMENT

ESIA TEAM LEADS - QUALIFICATION SUMMARY

Print: 14/09/2015 3:51:00 PM

Name	Role on Farim ESIA	Qualifications
Brian Colloty	Aquatic and coastal ecology lead[1]	Ecologist & Environmental Assessment Practitioner (Pr. Sci. Nat. 400268/07 & EAPSA certified); Ph.D. Estuarine Botany Ecologist with 19 years pf experience; specializing in environmental sensitivity and conservation assessments of aquatic and terrestrial systems, estuarine and wetland delineation, and biodiversity and ecological assessments within marine, coastal and inland environments throughout Africa.
Russell Chalmers	Marine and estuarine lead[1]	Ph.D. Fish Ecology Fisheries Biologist with 10 years consulting experience and prior fisheries research and marine conservation planning experience. Conducted specialist marine and fisheries assessments for EIA projects in Ghana, Sierra Leone, Mozambique, Madagascar and Angola, and freshwater fisheries surveys in South Africa, Zambia and Lesotho. Prepared numerous coastal zone management plans.
Adrian Hudson	Terrestrial ecology and forest ecosystem management lead[1]	B.Sc. Zoology & Botany Senior Terrestrial Ecologist; specializing in terrestrial ecological assessments biodiversity assessments and the preparation of Biodiversity Action Plans across Africa. Mr. Hudson led the previous terrestrial ecology work on the Project dating back to 2011.
Douglas Park	Archaeology and cultural heritage lead	Post-doctoral Fellowship, Ph.D. African Archaeology Archaeologist; 14 years of experience, specializing in West Africa archaeology and cultural heritage. Completed project work in Guinea, Senegal, Mali, Mauritania, Niger, and Nigeria.
Greg Huggins	Senior advisor on resettlement planning	M.Soc.Sc. Anthropology 20 years of experience in socio-economic impact assessment, resource economics and utilization analysis, resettlement planning, and IFC compliance auditing.
Marco da Cunha	Resettlement lead and socio-economic advisor[1]	M.Sc. Geography and Environmental Management Resettlement specialist, 8 years of experience conducting socio-economic assessments and resettlement planning across Africa. Speaks fluent Portuguese.
Mark Ryan	Supplemental socio-economic baseline collection	M.Sc. Geography and Environmental Management Socio-economic 8 years of experience that includes socioeconomic data collection, stakeholder engagement, and environmental management planning. He has worked previously with the Nomad consultants conducting a household livelihood survey for a resettlement assignment in Rwanda.
Christine Moore	Human health and ecological risk assessment lead[1]	M.Sc. Biology Toxicologist; 23 years of experience, having completed numerous wide area terrestrial, aquatic and HHERA of proposed and operating mining facilities.

Knight Piésold CONSULTING

TABLE 1E.1

GB MINERALS LTD.
FARIM PHOSPHATE PROJECT

ENVIRONMENTAL AND SOCIAL IMPACT ASSESSMENT
VOLUME 1 - INTRODUCTION TO THE ASSESSMENT

ESIA TEAM LEADS - QUALIFICATION SUMMARY

Print: 14/09/2015 3:51:00 PM

Name	Role on Farim ESIA	Qualifications
Colin MacDonald	Radiological expert	Ph.D. Zoology Radiological and contaminants specialist; 30 years of experience, expertise is in ecological risk assessment and toxicology, focusing on the effects of environmental contaminant exposure on fish, waterfowl and mammals. He has conducted numerous radiological risk assessments of existing and proposed mines and other sources of radioactivity.
Shawn Kozmick	Visual and landscape effects	Forestry Technician and GIS Specialist 10 years of combined GIS and environmental experience that includes data management, air photo interpretation, digitizing, geo-referencing, species at risk mapping, and working in 3D.

I:\3\01\00520\02\A\Report\Volume 1 - Intro (Report 1)\Appendices\Volume 1 - App 1E - ESIA Team\Appendix 1E.1 - Table of Key ESIA Contributors\Appendix 1E.1 - ESIA Team.docx

NOTES:

1. MEETS THE EXPERT TEAM REQUIREMENTS OUTLINED ON THE TERMS OF REFERENCE (APPENDIX 1C).

REV	DATE	DESCRIPTION	PREP'D	RVW'D
0	15SEP'15	ISSUED WITH REPORT NB301-520/2-1	RAC	SRA

ROBERT A. MERCER, Ph.D., P.ENG.
MANAGING PRINCIPAL, NORTH BAY

Dr. Robert Mercer is the Managing Principal at Knight Piésold's North Bay office. He is a Professional Engineer with over 25 years of rock mechanics experience. His recent work ranges from managing geomechanical site investigation programs to providing ongoing rock mechanics support to operating underground and open pit mines. He has worked on over 60 mining and civil projects world-wide and is a licensed Professional Engineer in Ontario, Nunavut, and Newfoundland and Labrador. Rob has degrees in both Geological and Mining Engineering.

KEY SKILLS / QUALIFICATIONS

- U/G Mine Rock Mechanics
- Open Pit Mine Rock Mechanics
- Geomechanical and Hydrogeological Site Investigations
- Project Management

Dr. Mercer has served as the Senior Reviewer, Project Manager and/or Specialist Engineer for the following projects:

UNDERGROUND EXPERIENCE

- **Goldcorp, Red Lake Operations,** ON, Canada
- **Glencore, Sudbury Operations,** ON, Canada
- **KGHM, Sudbury Operations,** ON, Canada
- **Barrick, Hemlo Operations,** ON, Canada
- **Boliden Group, Garpenberg Mine,** Sweden
- **Agnico Eagle, Meliadine Project,** NU, Canada
- **Sabina Gold & Silver, Back River Project,** NU, Canada
- **Silver Standard Resources, Pitarrilla Project,** Mexico
- **Avalon, Thor Lake Project,** NT, Canada
- **Glencore, Kidd Creek Mine,** ON, Canada
- **Xstrata, Brunswick Mine,** NB, Canada
- **Gran Colombia Gold, Segovia Mines,** Colombia
- **KLGI, Macassa Mine,** ON, Canada
- **North American Palladium, Lac Des Iles Mine,** ON, Canada
- **Peñoles, San Julien and Velardeña Mines,** Mex.
- **Teck, Duck Pond Mine,** NL, Canada
- **Nyrstar, Campo Morado Mine,** Mexico
- **Mosaic, K2 Mine,** SK, Canada
- **Newmont, Golden Giant Mine,** ON, Canada
- **KGHM, Malmbjerg Project,** Greenland
- **Nelson Aggregate Quarry,** ON, Canada

CROWN PILLAR STABILITY ASSESSMENTS

- **Town of Kirkland Lake,** ON, Canada
- **Glencore, Geco Mine,** ON, Canada
- **Avalon, Thor Lake Project,** NT, Canada
- **Kinross, Timmins Operations,** ON, Canada
- **Falconbridge, CamChib Property,** ON, Canada
- **Teck, Pend Oreille Mine,** WA, USA
- **Cam and Motor Mines,** Zimbabwe

OPEN PIT/SLOPE STABILITY EXPERIENCE

- **Sabina Gold & Silver, Back River Project,** NU, Canada
- **Silver Standards Resources, Pitarrilla Project,** Mexico
- **Silver Standards Resources, Marigold Mine,** NV, USA
- **KGHM, Carlota Mine, AZ, USA**
- **Stillwater, Marathon PGM Project,** ON, Canada
- **Champion Iron Mines Ltd., Fire Lake North Project,** QC, Canada
- **IAMGOLD Corp., Cote Gold Project,** ON, Canada
- **KGHM, Robinson Mine,** NV, USA
- **Coeur, La Preciosa Project,** Mexico
- **Hud Bay, Constancia Project,** Peru
- **B2Gold, Jabali Project,** Nicaragua
- **Teck, Schaft Creek Project,** BC, Canada
- **Northgate, Kemess Mine,** BC, Canada
- **Gran Colombia Gold, Marmato Project,** Colombia
- **KGHM, Sierra Gorda Project,** Chile
- **Che Guevara Mine,** Cuba

MISCELLANEOUS

- **Odebrecht, San Francisco Hydroelectric Project,** Ecuador
- **Science North, Dynamic Earth U/G Attraction,** ON, Canada
- **Redpath Projects,** ON, Canada
- **OPG, Ranney Falls Generating Station,** ON, Canada

Knight Piésold Ltd.
Canada

EDUCATION

Ph.D. Mining Engineering,
Queen's University
Ontario, 1999

M.Sc. Mining Engineering,
Queen's University
Ontario, 1992

B.Sc. Geological Engineering,
Queen's University
Ontario, 1988

SPECIALIZATIONS

- Rock Mechanics Input into Open Pit and U/G Mine Design
- Ongoing Rock Mechanics Support for Operating U/G and Open Pit Mines
- Numerical Stress Modelling
- Deep Mine Stress Related Issues
- Ground Control Audits and Assessments
- Rockburst Assessments and Analyses
- Geomechanical Training of Mine Staff

STEVEN R. AIKEN, P.ENG.
MANAGER, ENVIRONMENTAL SERVICES

Mr. Steven Aiken is a Senior Geological Engineer at Knight Piésold's North Bay office. He has over 23 years of experience in engineering, project management, environmental assessments, environmental monitoring programs, alternative energy projects, hydrogeological studies, permitting, and site remediation. He has worked for clients in Northern Ontario, the Arctic, across Canada and the USA, Latin America, the Caribbean, and the Middle East.

KEY SKILLS / QUALIFICATIONS

- Registered professional engineer in Ontario, Manitoba, Yukon and NWT/Nunavut.
- Permitting support including PTTW, ECAs, Work Permits, etc.
- Regulatory, First Nations and public consultation; meeting facilitation and open houses, and application process assistance.
- Environmental Impact Assessment - Preparation of EIA documents, environmental and engineering input.
- Environmental Monitoring Programs - Surface water and groundwater monitoring programs for industrial sites, municipal landfill sites and mining clients.
- Alternative Energy Projects - Managed solar power projects, wind power assessments and hydropower projects.
- Environmental Site Assessments - Phase 1 and 2 assessments for industrial, commercial and residential properties.

SPECIFIC RELEVANT EXPERIENCE

- **Eagle's Nest Project, ON, Canada -** Project Manager for the EA and permitting for a proposed underground nickel mine and associated transportation corridor and concentrate handling facilities in the Ring-of-Fire. Environmental baseline programs include aquatic/fisheries studies, hydrogeological assessments, hydrology studies, species at risk assessment, and ARD/ML evaluations. Includes Mine Closure Planning and geotechnical investigations.
- **Errington-Vermilion Project, ON, Canada -** Completing the Mine Closure Plans and permitting for two zinc-lead mines and a new processing mill located near Sudbury, Ontario. Work includes environmental baseline studies, consultation and species at risk assessments.
- **Montcalm Mine, ON, Canada** - Mine closure planning and design including development of specifications to implement closure measures.
- **Iqaluit Hydro, NU, Canada -** Project manager for environmental baseline programs for two hydropower sites near Iqaluit, NU. Work included overseeing numerous field programs and participating in regular government meetings.
- **Bissett Creek Graphite Mine, ON, Canada -** Project Manager for environmental programs and waste and water management engineering for the project including hydrogeological studies, aquatic assessments, terrestrial studies, species at risk assessments, environmental permitting and mine approvals. Also included Mine Closure Planning.
- **Mary River Project, NU, Canada -** Project Manager for Environmental and Geotechnical Engineering Services for the Mary River Project located near Pond Inlet, Baffin Island, Nunavut, Canada. Managed the evaluation of hydropower for the project. Also involved with the assessment for windpower.
- **Eagle Gold Project, YT, Canada -** Developed the mine reclamation plan for a proposed open pit gold mine and heap leach processing facility. Includes designing and modelling covers for the waste rock dumps and heap leach pad.
- **Kidd Metallurgical Site, ON, Canada -** Carried out the bi- annual groundwater monitoring program reporting for Jarosite facility area.

Knight Piésold Ltd.
Canada

EDUCATION

B.A.Sc. (Honours) Geological Engineering
University of Waterloo
Canada, 1990

SPECIALIZATIONS

- Project Management
- Environmental Permitting
- Environmental Baseline Studies
- Environmental Impact Assessments
- Alternative Energy Projects
- Hydrogeological Studies
- Public and First Nations Consultation
- Mine Closure Planning and Engineering
- Geochemical Characterization Studies - ARD/ML
- Environmental Monitoring
- Landfill Design

RICHARD COOK, P.GEO. (Ltd.)

SENIOR ENVIRONMENTAL SCIENTIST | ASSOCIATE

Mr. Richard Cook is a Senior Scientist at Knight Piésold's North Bay office. He is a professional geoscientist with 19 years of experience in the conduct of Environmental and Social Impact Assessments (ESIAs), water quality assessments and mine closure planning. He has also been involved in regulatory, community and aboriginal consultation programs, traditional knowledge studies, and socio-economic impact assessments. A considerable portion of his work has been in arctic and cold climates. His current responsibilities include managing social and environmental impact assessments of industrial projects within Canada and abroad.

KEY SKILLS / QUALIFICATIONS

- Managing multi-disciplinary teams on ESIAs of large industrial developments
- Equator Principles / International Finance Corporation (EP/IFC) compliant ESIAs
- Advanced knowledge in water quality modelling and assessments
- Technical expert at environmental assessment and water licensing public hearings
- 19 years cold climate experience in Canada's north
- International Project experience in Africa (Eritrea, Guinea-Bissau, Madagascar and Zambia)
- Experienced in the development and implementation of stakeholder engagement programs
- Demonstrated expertise in the design and implementation of land use / traditional knowledge studies

SPECIFIC RELEVANT EXPERIENCE

- **Mary River Project, NU, Canada -** Managed preparation of an environmental impact statement of a proposed 18 Mt/a iron ore mine with an associated railway and 12-month a year arctic shipping. Lead author and technical expert at hearings of the land use, archaeology, water quality and cumulative effects assessments. Led the development of an aquatic effects monitoring program for the Project. Providing ongoing regulatory support.
- **Eagle`s Nest Project, ON, Canada -** Senior technical oversight of the preparation of a Draft federal/provincial EIS/EA Report for a proposed underground Ni-Cu-PGM project located in the Ring of Fire in northern Ontario.
- **Harper Creek Project, British Columbia, Canada -** Contributing author to the provincial/CEAA Environmental Assessment Report for a 70,000 tpd open pit copper mine.
- **Victor Diamond Project, ON, Canada -** Involved in the feasibility study, Federal Comprehensive Study and Provincial Class environmental assessments, consultation program with First Nations, governments and the public. Prepared the mine closure plan and various provincial permit applications.
- **Farim Phosphate Project, Guinea-Bissau -** Currently managing the preparation of an EP/IFC compliant ESIA for a proposed phosphate mine and associated port facility.
- **Zara Project, Eritrea** - Primary author of an ESIA for a gold project currently under construction.
- **Debarwa and Asmara Projects, Eritrea -** Provided senior review of EP/IFC ESIAs for both the Debarwa Project and the multi-deposit Asmara Project, currently under construction.
- **Ambatovy Project, Madagascar -** Contributing author to the EP/IFC ESIA (water resources impact assessments).
- **Iqaluit Hydroelectric Project, NU, Canada -** Managed environmental components of pre-feasibility studies on five candidate hydro sites, and subsequent baseline studies and permitting.
- **Back River Project, NU, Canada -** Prepared the mine closure plan and environmental management plans covering ore handling and storage, waste rock and tailings, and water management for the draft EIS.

Knight Piésold Ltd.
Canada

EDUCATION

B.Sc. (Hon.) Environmental Science (Chemistry)
Queen's University,
Kingston, ON, 1996

SPECIALIZATIONS

- Environmental assessments
- Environmental baseline studies
- Water quality modelling and assessments
- Traditional knowledge and land use studies
- Mine closure and reclamation
- Cold region experience
- Africa experience

JASON PLAMONDON, B.Sc.
PROJECT SCIENTIST

Mr. Jason Plamondon is a Project Scientist at Knight Piésold's North Bay office. He has 8 years of experience in environmental data collection, analysis and reporting. His experience includes environmental baseline data collection and analysis, as well as environmental impact assessment. He has assisted several mining and green energy projects through the environmental permitting process. Jason has also been involved in the development of several mine closure plans in Ontario, the Yukon and Russia.

KEY SKILLS / QUALIFICATIONS

- Environmental Assessments (Federal and Provincial).
- Environmental Permitting.
- Mine Closure Planning.
- Aquatic Baseline Investigations.
- Regulatory and Stakeholder Consultation

SPECIFIC RELEVANT EXPERIENCE

- **Eagle's Nest Project, ON, Canada** - Currently assisting with the completion of the joint federal/provincial environmental assessment. This work included preparation of the Project Description, reviewing the EIS guidelines, co-authoring the Terms of Reference and assisting with the preparation of the draft EA/EIS. Assisted with the completion of the terrestrial and aquatic environmental baseline programs. Assisted with mine closure planning for the Feasibility Study and EA/EIS.
- **Bissett Creek Graphite Project, ON, Canada**- Assisting with baseline data collection, environmental permitting and the preparation of the Closure Plan. Characterized the existing aquatic environment through the collection of surface water quality, sediment, fish community, fish habitat, stream flow, and benthic macroinvertebrate community data. Assisted Northern Graphite with public and First Nation consultation.
- **Eagle Gold Project, YK, Canada -** Part of the multidisciplinary team that is currently developing the Reclamation and Closure Plan for the Quartz Mining Licence, as well as the detailed Reclamation and Closure Plan for the Water Use Licence.
- **Errington-Vermillion Project, ON, Canada -** Assisting with the coordination of the environmental permitting processes for the two mine sites and mill. Was responsible for coordinating the compilation of Mine Closure Plan, Environmental Compliance Approval and LRIA application.
- **Bell Creek Project, ON, Canada-** Responsible for the preparation of the closure plan amendment for the Bell Creek Mine and Mill. Assisted Lake Shore Gold Corp. with the public consultation process.
- **Udokan Copper Project, Siberia, Russia-** Lead author of the conceptual closure plan for the tailings storage facility as part of the International Feasibility Study.
- **Economic Development Projects, ON, Canada -** Assisted McSweeney and Associates with the preparation of Strategic Plans for the City of Dryden, Wawa and Dubreuilville. Aided with stakeholder identification, stakeholder consultation and primary data collection.
- **Solar Park Projects, ON, Canada -** Assisted with the preparation of the environmental permit applications required for renewable energy projects under Ontario Regulation 359/09.
- **Department of Fisheries and Oceans, ON, Canada** - Responsibilities included applying lampricides and analyzing water samples within the mobile laboratory, as well as conducting bioassays. Performed stream discharge measurements and flow timing studies. Consulted with local interest groups and other public stakeholders prior to conducting treatments.

Knight Piésold Ltd.
Canada

EDUCATION

B.Sc. (Honours)
Environmental Science and Physical Geography with Distinction
Nipissing University
Canada, 2008

B.Sc. (Honours) Biology
University of Ottawa
Canada, 2006

SPECIALIZATIONS

- Environmental Assessments (Federal and Provincial)
- Environmental Permitting
- Mine Closure Planning
- Aquatic Baseline Investigations
- Regulatory and Stakeholder Consultation

ANNA HUTCHISON, MES
PROJECT SCIENTIST

Ms. Anna Hutchison is a socio-economic practitioner at Knight Piésold's North Bay office. She holds a Master in Environmental Studies degree from York University and a Bachelor of Environmental Studies Degree from the University of Windsor. Anna has experience in community and Aboriginal consultation, socio-economic baseline studies, program evaluations, and environmental and social assessments for the resource sector.

KEY SKILLS / QUALIFICATIONS

- Socio-economic Environmental Assessments including baseline data collection and reporting.
- Public and Aboriginal consultation including consultation program planning and records management.

SPECIFIC RELEVANT EXPERIENCE

- **Eagle's Nest Project, ON, Canada** - Developed the socio-economic baseline and impact assessment programs. Lead the socio-economic baseline study, including primary and secondary data collection, creation of community profiles, community consultation and the baseline study and impact assessment reports. Prepared the Record of Consultation in support of the Terms of Reference including the tabulation of consultation activities undertaken to date.
- **Dubreuilville and Wawa Mining Sector Study, ON, Canada** - Prepared an interview questionnaire to assess the current and future workforce, services and materials and equipment requirements by current and future mining operations in the region for the Township of Dubreuilville and the Municipality of Wawa. Conducted several interviews using the developed questionnaire.
- **Colluli Potash Project, Eritrea** - Coordinated the socio-economic baseline and stakeholder engagement programs. Prepared the stakeholder engagement plan and project scoping report.
- **Asmara and Debarwa Projects, Eritrea -** Maintained and populated a public consultation database of the various public engagement activities undertaken for both project. Assisted in completing the public consultation section of the impact assessment report. Summarized baseline studies conducted by Eritrean consultants for inclusion in the SEIA for the Asmara Project. Conducted the impact assessment of various socio-economic components for the Asmara Project under strict timelines.
- **Mary River Project, NU, Canada** - Authored the environmental impact statement for the land and resource use and cultural well-being components including the review of the archaeology section. Updated the Land Use Baseline Report incorporating traditional knowledge on land base activities to reflect current and traditional land uses engaged in by residents of North and South Baffin Island. Managed and coordinated the concordance of the environmental impact statement with the required guidelines which involved communication with the client and discipline leads and data management. Coordinated final document assembly.
- **Eagle Gold Project, YT, Canada** - Prepared community baseline reports depicting current socio-economic baseline conditions at the local and territorial level for the Eagle Gold Project in Yukon, Canada which has the potential development of a 9.1 Mt/a conventional heap leach open pit operation. Prepared an assessment of public engagement activities carried out to date and assisted in establishing guidelines for further public engagement activities.
- **Roszell Pit and Rockfort Quarry, ON, Canada -** Prepared and conducted field surveys, background research, data collection and subsequent data management, analysis and presentation using statistical software, SPSS. Co-authored the social impact analysis on the potential social impacts of the quarry and the gravel pit.

Knight Piésold Ltd.
Canada

EDUCATION

Master in Environmental Studies
York University
Canada, 2010

Graduate Diploma in Business and Environment
Schulich School of Business
York University
Canada, 2010

Bachelor of Environmental Studies
University of Windsor
Canada, 2007

SPECIALIZATIONS

- Environmental and Socio-economic Assessments
- Baseline Studies
- Public and Aboriginal Consultation
- Traditional Knowledge Studies

TIMOTHY ROWLES, B.Sc., M.Sc., CP. AusIMM, RPEQ

REGIONAL MANAGER, QUEENSLAND

Timothy Rowles has 17 years of experience in engineering and environmental studies for mining and civil projects. His efforts have included feasibility, SEIA, waste characterization, mine site rehabilitation, tailings management systems, and heap leach pad planning and design. He has participated in the geochemical characterization of mining and mineral processing wastes with a focus on the prediction of the potential for acid rock drainage and metal leachate and the design of management and containment systems. Tim is a Chartered Professional with AusIMM and a Registered Professional Engineer Queensland in the fields of Environmental Engineering.

SPECIFIC RELEVANT EXPERIENCE

- **Svartliden Gold Project, Sweden** – Feasibility and detailed design for tailings storage and water storage facilities and plant site earthworks. Site supervision for peat excavation and foundation preparation during sub-arctic winter and full construction supervision of the embankment earthworks.
- **Rocklands Copper Project, Queensland -** Detail design of surface water diversion system, flood impact studies, sediment management design, waste rock and tailing geochemical assessments, PAF waste rock encapsulation design and tailings storage facility design for Definitive Feasibility Study & Environmental Impact Assessment.
- **Phu Kham Copper Gold Project, Laos -** Feasibility studies through to construction design for an integrated waste rock and tailings storage facility to store high sulfur tailings and high sulfur PAF waste rock subaqueously and to encapsulate 60 Mt of medium sulfur PAF waste rock within the confining embankment. The final embankment height will be 190m requiring 50 Mm^3 of engineered fill.
- **Mbalam Iron Ore Project, Cameroon** - Social and Environmental Impact Assessment for a new mine, 450km railway and port site. Including site scoping study, exploration audit and ongoing client liaison.
- **Lumwana Uranium Project, Zambia** - Tailings neutralization and treatment options studies. Including definition of neutralization and water treatment options, definition of test work methods, and supervision of testing and interpretation of results.
- **Bottle Creek Rehabilitation Project, Western Australia -** Planning and engineering design for a rehabilitation project including defining lease relinquishment criteria, environmental auditing and site monitoring.
- **Tarmoola Gold Project, Western Australia** - Tailings decommissioning review including
- geochemical investigation, embankment stabilization and reshaping, capping design, stability analysis and reporting.
- **Granny Smith Gold Mine, Western Australia -** Engineering and site supervision for embankment reshaping, cover construction, storm water management and rehabilitation trials on an existing tailings storage facility. Final design of a 95ha new tailings storage facility adjacent to the existing facility, including water-balance modeling, stability assessment, geomembrane liner design, seepage control and monitoring and reporting.
- **Chirano Gold Project, Ghana** - Project Manager for waste dump design including geochemical characterization, closure reshaping design, cover design, revegetation design and sediment control design. Design of encapsulation system for arsenic containing construction materials deemed unsuitable for use in construction.
- **Paddington Gold Project, Western Australia** - Project Manager for the Decommissioning Review of a two cell tailings storage facility, including geochemical and hydrogeological review, stability analysis, rehabilitation design and reporting.
- **Ban Phuc Nickel Project, Vietnam** - Waste rock and tailings geochemical characterization. Pollutant modeling including for tailings and tailings supernatant pond pollutant flux modeling, water release quality predictions and comparison to local regulations.
- **Ban Houayxai Gold Silver Project, Laos** – Project Manager for final design and construction supervision of an 80m high water retaining embankment.

Knight Piésold Pty Ltd.
Australia

EDUCATION

Short Course, Mine Waste Management and Landform Design
University of Queensland
2001

M.Sc. Earth and Environmental Science
University of Manchester
1998

B.Sc. Geology with Environmental Applications
Royal School of Mines, Imperial College
London 1996

SPECIALIZATIONS

- Mine Closure and Reclamation Planning and design.
- Waste Characterization and Acid Rock Drainage Protection.
- Heap Leach Pad and Tailings Facility Planning and Design.

DELGADO, ALEJANDRO

INGENIERO I

Ingeniero Ambiental titulado y colegiado (CIP Nº 138280) de la Universidad Nacional Agraria La Molina. La experiencia de Alejandro incluye trabajos relacionados al análisis de impactos ambientales a la calidad de aire, ruido y vibraciones mediante la aplicación de programas computacionales de modelación ambiental (AERMOD, CALPUFF, IAQx y SoundPLAN). Experiencia en el análisis y elaboración de informes relacionados con los componentes clima y meteorología, calidad de aire, calidad de ruido y vibraciones, los cuales forman parte de los Estudios de Impacto Ambiental, Evaluaciones Ambientales, Informes de Monitoreo y Modelaciones para Calidad de Aire, Ruido y Vibraciones.

EXPERIENCIA RELEVANTE ESPECÍFICA

- **Myanmar Wanbao Copper Mining Limited.-** Modelación de la Calidad de Aire, Ruido y Vibraciones – Proyecto Letpadaung. Elaborado para Knight Piésold Pty. Ltd Perth-Australia. Julio - Setiembre de 2013.
- **Pueblo Viejo Dominicana Corporation.-** Auditoría Ambiental Área Oeste de la Presa de Colas Mejita... República Dominicana. Abril – Junio de 2013.
- **Impala Perú S.A.C.-** Evaluación Ambiental de la Construcción del Nuevo Edificio Administrativo y de la Calidad de Aire para la Ampliación y Techado del Almacén. Enero – Marzo de 2013.
- **Anglo American Quellaveco S.A.-** Moquegua, Perú. Estudios Ambientales (Monitoreo, Modelaciones de Calidad de Aire, Ruido y Vibraciones, Línea Base Ambiental, Estudios de Impacto Ambiental) Abril de 2011 – Agosto 2013.
- **Canteras del Hallazgo SAC.-** Proyecto de Exploración Chucapaca - Segunda Modificación del Estudio de Impacto Ambiental Semidetallado – Categoría II. Responsable de los capítulos de Calidad de Aire, Clima y Meteorología, Ruido y Vibraciones y Calidad de Agua. 2012.
- **Sociedad Minera Cerro Verde S.A.A.-** Arequipa, Perú. Estudio de Línea Base Ambiental para Nuevas Alternativas de Rutas de Peregrinos a Chapi. Responsable de los capítulos de Calidad de Aire, Clima y Meteorología y Ruido y Vibraciones. 2012.
- **Impala Perú S.A.C.-** Modelamiento de Concentración de Gases y Material Particulado al interior del Almacén del Callao. Responsable del desarrollo de todo el estudio. 2012.
- **Hudbay Perú S.A.C.-** Actualización del Modelamiento de Calidad de Aire y Actividades de Soporte Proyecto Constancia Responsable del desarrollo de todo el estudio. 2012.
- **Anglo American Michiquillay S.A.-** Cajamarca, Perú. Estudio de Línea Base Ambiental – Proyecto Michiquillay Responsable y coordinador de los estudios de calidad de aire, ruido y vibraciones, clima y meteorología. 2011 – 2012.
- **Impala Perú S.A.C.-** Ampliación y Modernización del Almacén 1, Modificación del Estudio de Impacto Ambiental. Lima Responsable del modelamiento de dispersión de Calidad de Aire. 2011.
- **Sociedad Minera Cerro Verde S.A.A.-** Arequipa, Perú. Estudio de Impacto Ambiental Proyecto Expansión del U.P. Cerro Verde. Responsable de la sección Calidad de Aire y revisor del modelamiento de dispersión. 2011.
- **Investigación: Tesis para optar el Título de Ingeniero Ambiental.-** "Optimización del modelo AERMOD mediante el modelo meteorológico de meso escala BRAMS para la dispersión de SO_2 de una fuente puntual". Tesis calificada como sobresaliente para optar el título de Ingeniero Ambiental. (2009-2011).

Knight Piésold Consultores S.A. Perú

EDUCACIÓN

Modelo de Zona de Mezcla – CORMIX. 2012

Escuela de Ingeniería, Pontificia Universidad Católica de Chile. Modelación de la Calidad de Aire (2012)

Facultad de Ciencias Ingeniería Ambiental, Universidad Nacional Agraria La Molina (2009)

Modelización de Dispersión Atmosférica: ISC AERMOD View. Universidad Nacional Agraria La Molina (2009)

ESPECIALIZACIÓN

- Modelos de dispersión
- Sistemas de Gestión Ambiental ISO 14001-2004
- Sistemas de Gestión Inventario de Gases de efecto Invernadero ISO 14064 - 2011

Tom Watkin, M. Sc. Hydrogeology & Groundwater Quality

MANAGER GROUNDWATER SERVICES

SUMMARY

Tom's 12 years' experience in Australia and overseas covers strategic mine site hydrogeology supervision, operational mine site dewatering, groundwater investigation and assessment, development of hydrogeological conceptual models, drill program design and implementation, team leadership, project management and data management systems.

He is a member of the IAH (International Association of Hydrogeologists) and AIG (Australian Institute of Geoscientists).

EDUCATION

- Master of Business Administration, University of Western Australia (current)
- Master of Science, Hydrogeology and Groundwater Quality, University of Reading, 2002
- Bachelor of Science (Hon) Geology, University of Edinburgh, 2001

REGISTRATION / CERTIFICATIONS / TRAINING / AFFILIATION

- Member , International Association of Hydrogeologists
- Australian Institute of Geoscientists: Registered Professional Geologist (RPGeo)

PROFESSIONAL EXPERIENCE

- Project manager for a wide range of hydrogeological jobs across Western Australia. Including virtual teaming with other regions.
- **Strategic Mine Site Hydrogeology:** Responsible for all aspects of strategic hydrogeology at three Pilbara mine sites. This included strategic planning, providing professional guidance for the site hydrogeologists and running value add projects at each site.
- **Mine Site Hydrogeological Operations:** Responsible for all aspects of operational hydrogeology at the Rio Tinto Yandi mine operation in the Pilbara. Led a team of 5 hydrogeologists, graduates and technical officers to ensure that the hydrogeological needs of the site were maintained. Communication with the wider operation was essential to make sure that water levels did not impact the production of the site.
- **Hydrogeology:** Skilled hydrogeologist with experience in the development and interpretation of hydrogeological conceptual models, water management strategies, design and implementation of investigative and construction drilling programs, and the design and implementation of groundwater investigations. Undertaken recent management of programs investigating groundwater dependent ecosystems.

TRAINING

- Senior First Aid, Emergency Response Team training, Working at Heights, Confined Space, Presentation skills, Project Management, LEAN, 4WD Driving and Recovery, Asbestos Surveying P402**,** Future Leaders Program & Managing People Program.

Tom Watkin, M.Sc.
Manager Groundwater Services

WORK HISTORY

- Knight Piesold Pty Ltd, Manager Groundwater Services, 2014 – Present
- Sinclair Knight Merz, Team Leader – Land and Water, 2011-2014
- Rio Tinto Iron Ore Technical Assurance Hydrogeology, Mine Site Hydrogeologist, 2007-2010
- Pattle Delamore Partners Ltd (Christchurch, New Zealand), Hydrogeologist, 2006-2007
- Hyder Consulting (London, UK), Hydrogeologist, 2003-2006
- Parkman Environment (London, UK), Graduate Hydrogeologist, 2002-2003

CURRICULUM VITAE
Dr Brian Michael Colloty

Profession: Ecologist & Environmental Assessment Practitioner (Pr. Sci. Nat. 400268/07 & EAPSA certified)
Specialisation: Ecology and conservation importance rating of inland habitats, wetlands, rivers & estuaries
Years experience: 19 years

SKILLS BASE AND CORE COMPETENCIES

- 19 years experience in environmental sensitivity and conservation assessment of aquatic and terrestrial systems inclusive of Index of Habitat Integrity (IHI), WET Tools, Riparian Vegetation Response Assessment Index (VEGRAI), estuarine and wetland delineation throughout Africa. Experience also includes biodiversity and ecological assessments with regard sensitive fauna and flora, within the marine, coastal and inland environments. Countries include Mozambique, Kenya, Namibia, Central African Republic, Eritrea, Mauritius, Madagascar, Angola, Ghana, Guinea Bissau and Sierra Leone.
- 12 years experience in the coordination and management of multi-disciplinary teams, such as specialist teams for large scale EIAs and environmental monitoring programmes, throughout Africa and inclusive of marine, coastal and inland systems.
- GIS mapping and sensitivity analysis

TERTIARY EDUCATION

- 1994: B Sc Degree (Botany & Zoology) - NMMU
- 1995: B Sc Hon (Zoology) - NMMU
- 1996: M Sc (Botany) - NMMU
- 2000: Ph D (Botany) – NMMU

EMPLOYMENT HISTORY

- 1996 - 2000 Researcher at Nelson Mandela Metropolitan University - SAB institute for Coastal Research & Management.
- 2001 - January 2003 Training development officer AVK SA
- February 2003- June 2005 Project manager & Ecologist for Strategic Environmental Focus (Pretoria)
- July 2005 - June 2009 Principal Environmental Consultant Coastal & Environmental Services
- June 2009 - present Owner / Ecologist of Scherman Colloty & Associates cc

SELECTED RELEVANT PROJECT EXPERIENCE

- Biodiversity and aquatic assessments for 48 renewable projects in the past three years in the Western, Eastern, Northern Cape, KwaZulu-Natal and Free State provinces. Clients included RedCap, ACED Renewables, Mainstream Renewable, GDF Suez, Globeleq, ENEL, Abengoa amongst others. Particular aquatic sensitivity assessment and Water Use License Applications on behalf of Mainstream Renewable Energy (8 wind farms and 3 PV facilities.), Cennergi / Exxaro (1 Wind farm), WKN Wind current (2 wind farms & 2 PV facilities), ACED (4 wind farms) and Windlab (3 Wind farms) were also conducted. Several of these projects also required the assessment of the proposed transmission lines and switching stations, which were conducted on behalf of Eskom.
- Vegetation assessments on the Great Brak rivers for Department of Water and Sanitation, 2006 and the Gouritz Water Management Area (2014).
- Farim phosphate mine and port development, Guinea Bissau - biodiversity and marine assessment on behalf of Knight Piésold Canada - current.
- Tema LNG offshore pipeline EIA - marine and estuarine assessment for Quantum Power (on-going).
- Colluli Potash South Boulder, Eritrea, SEIA marine baseline and hydrodynamic surveys co-ordinator and coastal vegetation specialist (coastal and marine) (on-going).
- Various wetland (85) and marine and biodiversity assessments for the Savannah Environmental, Gibb Consulting, AECOM, CSIR and EOH, CES, 1996, 2006, 2009, 2010, 2011, 2012, 2013 and 2014.
- Proposed FibreCo fibre optic cable vegetation assessment along the N2, PE to Cape Town, 2012 on behalf of SRK (2013).
- Wetland, estuarine and riverine assessment for Addax Biofeuls Sierra Leone, Makeni for Coastal & Environmental Services: 2009.

CURRICULUM VITAE (CV) FOR RUSSELL CHALMERS

Proposed Position: Ichthyological and fisheries specialist

Name of Firm: Aquatic Ecosystem Services

Name of Staff: Russell Chalmers

Profession: Environmental Consultant

Years with Firm/Entity: 2 **Nationality:** South African

Membership of Professional Societies:

- Honorary Research Associate of the South African Institute for Aquatic Biodiversity.
- Professional Natural Scientist; Aquatic Science (Pr. Sci. Nat.) with the South African Council for Natural Scientific Professions (SACNASP). Registration Number 400129/13.
- Western Indian Ocean Marine Science Association (WIOMSA)
- South African Network for Coastal and Oceanic Research

Key qualifications:

- PhD from the Department of Ichthyology and Fisheries Science, Rhodes University which involved marine/estuarine ecological and fisheries research.
- Twelve years of consulting experience, during which time he has conducted numerous specialist ichthyofaunal ecological and fisheries assessments for projects in South Africa, Mozambique, Lesotho, Madagascar, Angola, Tristan da Cunha, Ghana and Zambia.
- Project manager of several coastal zone management, estuarine management and spatial planning projects.
- Marine and fisheries specialist consultant for port development and dredging projects
- Design and implementation of ecological monitoring programmes to assess project impacts on marine ecology and fisheries resources.

Education:

- PhD Ichthyology, Rhodes University, SA, 2011.
- MSc Ichthyology Rhodes University, SA, Ichthyology and Fisheries Science, 2002.
- BSc (Hons) First Class Pass in Ichthyology and Fisheries Science, Rhodes University, SA, 2000.
- BSc Rhodes University, Majors Zoology and Microbiology, 1999.

Other Training:

- Aquatic biomonitoring Course (2003) - Run by Coastal & Environmental Services.
- Environmental Impact Assessment Course (2003) - Run by Coastal & Environmental Services.
- Class IV commercial/scientific SCUBA diver (2006); NAUI Master Diver (1996).
- Class IV commercial/scientific SCUBA dive supervisor (2011).
- Small boat (<9m) skipper, Category C with endorsments for diving operations and surf launching (2002).
- Restricted Radiotelephone Operators Certificate (2008).
- Level 3 First Aid.

Employment Record:

From (Year) to (Year)	Employer	Position Held
Nov 2012 – Current	Aquatic Ecosystem Services	Director / Specialist fisheries and marine consultant
Jan 2012 – Oct 2012	Freelance consultant	Marine and fisheries specialist consultant
Jan 2006 – Dec 2011	Enviro-Fish Africa	Specialist fisheries and marine consultant / PhD Candidate
2005	Coastal and Environmental Services	Senior Environmental Consultant
2003-2004	Coastal and Environmental Services	Environmental Consultant
Aug 2002-Dec 2002	Coastal and Environmental Services	Student intern
2001-2002	Rural Fisheries Project, Rhodes University	Ad hoc field researcher for fisheries development projects

Education

Senior Certificate with University Exemption

Bachelor of Science Degree (Majors: Zoology and Physiology)

Master of Science Degree (Environmental Science)

Currently PhD (Ecology and Zoology)

Certifications

Senior Certificate with University Exemption

Languages

English - Fluent Afrikaans - Fluent Zulu - Fluent

Project Experience

Hudson Ecology (Pty.) Ltd. - Potchefstroom, South Africa

Position: Director/Senior Ecologist

- Project conceptualisation
- Skills growth and leadership
- Develop and maintain linkages to universities and professional bodies
- Development of new ecological products and methodologies
- Project management
- Ecology team growth and acquisition of new ecologists
- Terrestrial ecological assessments
- Biodiversity assessments and action plans

Employment History

South African Defense Force - Transvaal, South Africa
Position: Conscript (Jan 1990 to Dec 1991)

Executive Outcomes - Angola
Position: Consultant (Jan 1992 to March 1993)

Eques Trails Horse Safaris - Limpopo Province, South Africa
Position: Trail leader, Horse trainer (March 1993 to July 1993)

Zabalaza Conservation Department - Kwazulu Natal, South Africa
Position: Head Ranger/Chief Instructor (July 1993 to July 1994)

Natal Parks Board - KwaZulu Natal, South Africa
Position: Anti-Poaching Consultant (Jul 1994 to Dec 1997)

UNISA - Gauteng, South Africa
Position: Full-time student (BSc) (Jan 1998 to Dec 2001)

UNEP/GEF Desert Margins Program Potchefstroom - North West Province
Position: Researcher (Jan 2002 to Sept 2006)

ECOSUN cc. - Gauteng, South Africa
Position: Terrestrial and Wetland Ecologist (Sept 2006 to May 2007)

Golder Associates Africa (Pty.) Ltd. - Midrand, South Africa
Position: Senior Ecologist and Terrestrial Group leader (May 2007 - August 2014)

To date Adrian has conducted ecological and biodiversity studies for over 90 projects in 20 countries in Africa. He led the ecological programs at the Farim Phosphate Project while at Golder Associates. He has also worked on ecological baseline and impact assessment projects in Guinea, Sudan, Tanzania, Liberia, Central African Republic, Mozambique, Botswana, Zambia Lesotho, Swaziland and South Africa.

Doug Park

Doug Park (Ph.D.) is an accomplished field archaeologist and geospatial information specialist with over 15 years of professional experience, including 5 years as a consultant. At ERM he conducts archaeological field and desk-top baseline research, ESIA and Management Plan preparation, GIS modeling, remote sensing analysis, and technical direction of cultural heritage sub-contractors. He has directed or played a key role in 30 major archaeological projects on five continents and has an expert knowledge of several ancient and historical culture areas. Specifically, he has worked in Ethiopia, Djibouti, Mali, Senegal, Mauritania, Niger, Nigeria, Guinea, Cameroon, Congo, the DRC, the CAR, Albania, Bulgaria, Greece, Turkey, Armenia, Nicaragua, Guatemala, Peru, Italy, China, and the US.

Dr. Park's field research work has focused on East and West Africa, the Mediterranean, the Near East, and areas of Latin America where he has conducted multiple archaeological, climatological and cartographic projects. His dissertation research involved three years of intensive fieldwork in West Africa where he collaborated with numerous local specialists and government officials.

Park began conducting project work with ERM in 2010 while still a graduate student at Yale University. Upon graduating he took a post-doctoral fellowship position at the Center for Advanced Spatial Technology at the University of Arkansas, but continued to work with ERM on various projects during that time. He finally joined the Washington DC office as a full-time employee in 2011. In 2013 he took a six month sabbatical to teach courses in archaeology and geospatial analysis at Rice University in Houston, TX. He has since returned full-time to ERM as a member of the Washington DC Cultural Heritage team.

Professional Affiliations

- Society for American Archaeology
- Society for Africanist Archaeologists
- American Institute of Archaeology
- Research Affiliate, George Washington University, Capital Archaeology Institute

Fields of Competence

- Archaeological Field Survey and Reconnaissance Techniques
- Cultural Heritage Management
- Social and Environmental Impact Assessment
- GIS Modeling/Remote Sensing and Its Application to Impact Assessment

Key Industry Sectors

- Oil & Gas
- Mining
- Linear Infrastructure

Education

- Post-Doctoral Fellowship, Center for Advanced Spatial Technology (CAST) – University of Arkansas
- Ph.D. African Archaeology – Yale University
- M.A. Archaeology – Yale University
- B.A. Archaeology and Anthropology (double major), Classics (minor) – George Washington University
- Meets U.S. Secretary of the Interior's (36-CFR-61) Professional Standards for Historic and Prehistoric Archaeology

Languages

- English - Native
- French - Fluent
- Spanish – Reading Ability, Basic Spoken

Certifications

- Wilderness First Ai

Greg Huggins
Social Consultant

Qualifications and Memberships

- M. Soc Sc – Anthropology (University of Cape Town)

Keys skills and Competencies

- Project Management
- Social Research
- Social Impact Assessment
- Compliance Auditing
- Resettlement Planning
- Rural Development
- Environmental Compliance Monitoring

Countries of Experience

- South Africa
- Mozambique
- Angola
- Botswana
- Cameroon
- Congo (both the Republic of as well as the Democratic Republic)
- Ethiopia
- Kenya
- Lesotho
- Malaysia
- Malawi
- Mauritania
- Namibia
- Nigeria
- Philippines
- Serbia
- Sierra Leone
- South Africa
- Swaziland,
- Tanzania
- Zambia
- Zimbabwe

Overview

Mr. Greg Huggins is the Managing Director of NOMAD Socio Economic Management and Consulting (Pty) Ltd. He has over 25 years of experience in the research and consultancy fields and specializes in social impact assessment, resource economics and utilisation analysis, IFC compliance auditing and assessment. Resettlement and development planning, socio-economic survey research, public participation and facilitation, socio-economic analysis and applied research and consultancy with respect to corporate social responsibility planning. He has been involved in a wide variety of studies prepared to World Bank and IFC standards. Greg has worked extensively in the water, mining and bio-energy sectors. Greg has been the project leader for social impact and resettlement studies for dams and infrastructure projects, a suite of mining houses as well as bio-energy firms, housing projects and port developments. These have included operations in Angola, Botswana, Cameroon, Congo (both the Republic of as well as the Democratic Republic), Ethiopia, Kenya, Lesotho, Malawi, Mauritania, Mozambique, Namibia, Nigeria, Sierra Leone, South Africa, Swaziland, Tanzania, Zambia, and Zimbabwe. Large projects recently undertaken have been the development of a Resettlement Action Plan for a Bio-fuels project in Sierra Leone, and Resettlement Action Plans for major mines in Tanzania, Zambia and the DRC. Recently he has acted as a review consultant auditing various institutions and organisations against compliance as to the IFC Performance Standards. He has contributed to the IFC expert panel on the development of IFC PS 5 (Land Acquisition and Involuntary Resettlement). Audits and reviews commissioned by the bank and lenders have been carried out in Zambia, South Africa, Mozambique, Democratic Republic of Congo and Mauritania. Greg has lectured in applied social research and resettlement planning at the Universities of Cape Town, Rhodes and KwaZulu Natal. Greg, in association with Local colour runs an annual course on best practise compliance in the social sector, responsible resettlement planning and land access.

Education

M.Soc. Sc. - Anthropology: University of Cape Town 1993
B.Soc. Sc. (Hons) – Anthropology – University of Natal 1984
B.Soc. Sc. – Anthropology and Economics: University of Natal 1983

Professional History

2009 -current	NOMAD: Nottingham Road and Durban, SA – Director and employer
2005 -2009	WFA: Director. One of 6 directors in Engineering, Management and Environmental Consultancy. In charge of resettlement, socio-economic and planning division.
1999- 2005	IWR Nottingham Road, SA, Director Company Managing Director of small consultancy
1998 – 1999	Scott Wilson Durban, SA, Divisional Director in charge of socio-economic planning division
1977	University of Cape Town, Cape Town, SA Lecturer Taught Masters Level Programme in Applied Anthropology
1994 – 1996	Scott Wilson/Seneque, Smit Maughan-Brown Durban, SA Senior Consultant;
1987 – 1994	Human Sciences Research Council, Pretoria, SA. Senior Researcher

CURRICULUM VITAE

MARCO DA CUNHA

NOMAD SOCIO-ECONOMIC MANAGEMENT AND CONSULTING (PTY) LTD

Personal Details

Full Name:	Marco Filipe Santos Da Cunha
Date of Birth:	19 July 1980
Gender:	Male
Nationality:	South African / Portuguese
Country of Residence:	South Africa

Biography

Marco has ten years of experience in the field of environmental and social management, with expertise in managing Environmental and Social Impact Assessments (ESIAs). In addition, Marco specialises in Social Impact Assessments (SIAs) and Resettlement Action Plans (RAPs) for a range of industry sectors throughout sub-Saharan Africa.

Marco has also prepared a number of Social Management Plans (SMPs) and Corporate Social Responsibility (CSR) strategies and programmes. All plans and programmes have been designed to be fundamentally integrated into the Project Environmental and Social Management System (ESMS).

Marco has also built up a strong profile in undertaking Environmental and Social Screening Studies, Compliance Audits, Due Diligence Assessments and Resettlement Monitoring and Evaluation surveys. All reviews are undertaken in conformance to World Bank and International Finance Corporation (IFC) standards.

Marco has experience in a number of industry sectors throughout South Africa, sub-Saharan Africa, and increasingly in South-East Asia. These include the oil and gas, mining, transport infrastructure (notably airports), forestry, food industry and public infrastructure sectors. In country experience includes Angola, Ghana, Guinea-Bissau, Kenya, Mozambique, Malaysia, Myanmar, Namibia, Swaziland, South Africa, Turkey and Tanzania.

Academic Qualifications

MSc (Geography and Environmental Management)

- University of Natal, South Africa, 2004-2005

BSc Honours (Geography and Environmental Management)

- University of Natal, South Africa, 2003
- *Cum Laude*

BSc (Geography and Environmental Management)

- University of Natal, South Africa, 1998-2002
- Deans Commendation
- Distinction in Major Subjects

Work Experience

2012-Current	**Nomad Consulting**
Position Held:	Social Consultant
Responsibilities:	Manage and assist in undertaking Social Impact Assessment and Resettlement Actions Plans including management of the resettlement process, community development and social monitoring.
2010-2012	**Environmental Resources Management**
Position Held:	Senior Environmental Consultant
Responsibilities:	Project Manager or team member covering a range of Integrated Environmental Management projects including EIAs, EMPs, and ESMS and Due Diligence audits for projects in South Africa and Sub-Saharan Africa.
2008-2010	**Jeffares & Green**
Position Held:	Environmental Consultant
Responsibilities:	Project Manager or team member focussing on undertaking EIAs in South Africa and Mozambique.
2005-2008	**Coastal & Environmental Services**
Position Held:	Environmental Consultant
Responsibilities:	Project Manager or team member focussing on undertaking EIAs in South Africa and Mozambique.
2005-2008	**Resettlement and Development Solutions (Associate)**
Position Held:	Associate Consultant
Responsibilities:	Manage and assist in undertaking Resettlement Actions Plans including management of the resettlement process, community development and social monitoring.

MARK ROSS RYAN
ENVIRONMENTAL SCIENTIST

Mark Ryan has approximately 8 years of experience altogether, having been involved in various aspects of environmental consulting which includes environmental impact assessments, project management, proposal compilation and budgeting, facilitation of public participation processes as well as environmental auditing.

RELEVANT PROJECT EXPERIENCE

Western Aqueduct: Mark has assumed the role and responsibility of lead Environmental Control Officer for this project, and monitors and reports on compliance with the Environmental Management Plan and associated documentation.

Northern Aqueduct: Mark has assumed the role and responsibility of lead Environmental Control Officer for this project, and monitors and reports on compliance with the Environmental Management Plan and associated documentation.

Renishaw Estate: Mark assumed the role of environmental assessment practitioner, undertaking the Scoping and EIA process for the proposed development of the Renishaw estate mixed use development near Scottburgh, KwaZulu-Natal.

Canonbrae Development: Mark facilitated the environmental impact assessment process for the proposed development of residential units on Canonbrae Farm in Umkomaas, KwaZulu-Natal. This development included the waste license application for a new 2mega Litre waste water treatment works. The expansion of the sewage works (20 Mega litres) would form part of the eThekwini Municipality's responsibilities.

Wirtz Road uPVC Sewer Reticulation: Mark facilitated the Basic Assessment process for this project on behalf of the eThekwini Municipality.

Cornubia Pilot Phase: Mark assumed the role and responsibility of Environmental Control Officer for this project, and monitored and reported on compliance with the Environmental Management Plan.

PROFESSIONAL HISTORY

Apr 2014 to current	*Knight Piésold (Pty) Ltd, South Africa* – Environmental Scientist
Dec 2013 - Mar 2014	*Strategic Environmental Focus* – Senior Environmental Consultant
Oct 2008 - Dec 2012	*SiVEST (Pty) Ltd* – Environmental Consultant
Mar 2006 - Sep 2008	*Blue Environmental Consultants (Formally NMH Consulting)*

Knight Piésold Ltd.
South Africa

Qualifications

2004, M Soc Sci (Geography & Environmental Management), School of Life & Environmental Sciences, University of Kwa-Zulu Natal, Howard College Campus

2003, B Soc Sci (Hons) (Geography & Environmental Management), School of Life & Environmental Sciences, University of Kwa-Zulu Natal

2003, B Soc Sci (Geography & Environmental Management), School of Life & Environmental Science, University of Kwa-Zulu Natal

Nationality

South African

Christine E. Moore, B.Sc., M.Sc., - Senior Scientist

Education and Professional Qualifications:

BSc, Zoology (University of Guelph, ON)

MSc. Biology (Concordia University, QC)

Summary of Experience:
1998 to Present
Intrinsik Environmental Sciences

1988 to 1998 – CanTox Inc.

Affiliations:
Member Canadian Institute of Mining and Metallurgy

Member Canadian Land Reclamation Association

Member of Maritime Energy Association

Affiliations:
Adjunct Professor - Dalhousie University (School of Resources and Environmental Studies): 1999 – 2010

Ms. Moore is a toxicologist with over 25 years of experience in environmental and human toxicology and risk assessment. She is the senior project manager and senior technical lead of all work conducted in the Atlantic region by Intrinsik Environmental Inc. She has extensive experience in the assessment of emissions from mining and metals processing sector, having completed numerous wide area terrestrial, aquatic and human health risk assessments of proposed and operating facilities in Eastern and Central Canada.

Relevant past assessments have included:

- Human health and ecological risk assessments on proposed emissions from the Vale Long Harbour Hydromet facility under the Environmental Impact Assessment (2006/2007)
- Re-evaluation of expected emissions and effluent from the Hydromet facility, relative to past evaluations (February 2012)
- Human health risk assessment of the releases from a concentrate handling facility in Dalhousie NB (2006)
- Human health risk assessment of residential areas near an operating lead smelter (2008)
- Human health and ecological risk assessment (freshwater and terrestrial) of Brunswick Mines fugitive tailings dusting releases as part of closure planning (2007 – 2012)
- Air quality assessments of the Iron Ore Company of Canada's pelletizing facility in Labrador City, NL (2004; 2009 – 2014)
- Risk assessment of dust emissions on caribou and berries related to proposed operations of the Mary River Mine, Baffin Island (Baffinland, 2010; 2011)
- Development of aquatic effects monitoring program benchmarks for the Mary River Mine (Baffinland; 2014)
- Internal peer reviewer of human health risk assessment for the proposed Kami Mine (Alderon Iron Ore; 2012-2013)
- Human health risk assessment of the Proposed Wabush 3 Mine (Iron Ore Company of Canada, 2014 Environmental Impact Assessment)
- Baseline country foods assessments for Alderon Iron Ore Mine, and Iron Ore Company of Canada (2 separate projects; 2013 and 2014)
- External review of the human health and ecological risk assessments of a proposed uranium mine (Government of Nunavut, 2014)
- Marine ecological risk assessment associated with a metals processing facility in eastern Canada (2014 – 2015)

Several of these projects involved the development of extensive sampling programs. Ms. Moore has considerable risk communications strategy and implementation expertise as many projects conducted by Intrinsik have required extensive interaction with stakeholder groups including the public, environmental organizations, media, and various levels of regulatory agencies.

Colin R. Macdonald, B.Sc, M.E.Sc, Ph.D.
Principal Consultant/Analyst

NECA

Education

B.Sc. Honours Fisheries Biology, University of Guelph, ON

Masters of Engineering Science, University of Western Ontario, ON

Ph.D. Zoology, University of Guelph

Professional Experience

1998 – Present, President/ Principal Analyst, Northern Environmental Consulting & Analysis Inc.

1991 – 1998, Research Scientist (Environ. Toxicology), Whiteshell Laboratories, AECL.

1989 – 1991, Consultant/term biologist, National Wildlife Research Centre, Canadian Wildlife Service.

1986 – 1989, Postdoc/Adjunct professor, Environmental and Resource Studies, Trent University.

Professional Affiliations

Environmental Professional for R&D, with EcoCanada

Technical Review Panel for AANDC's Northern Contaminants Program

American Chemical Society (ACS) since 2000

Society of Environmental Toxicology and Chemistry (SETAC) since 1989.

Years of Experience

Environmental Research and Program Development: 30

Dr. Colin Macdonald has over twenty-five years of experience in environmental research, study design, data analysis, and ecological risk assessment, mostly at northern mine sites. His primary area of expertise is in ecological risk assessment and toxicology. During his 30 year career he has held research positions with Environment Canada and Atomic Energy of Canada on the effects of environmental contaminant exposure on fish, waterfowl and mammals. Dr. Macdonald has worked extensively with federal departments, territorial agencies and aboriginal organizations to design and implement science-based field sampling programs for human health and ecological risk assessments near communities and at several abandoned mine sites. In association with other firms, he has written and contributed extensively to state of the environment reviews and to Phase 1 assessments for protected areas in the NWT. He has authored and co-authored numerous journal papers, reports and presentations at scientific conferences.

Relevant Experience

Field support and analysis for human health and ecological risk assessments at Port Radium, Contact Lake, Indore/Hottah and other NWT mines. Activities included program development, collections and statistical analysis in support of risk assessment.

Tier III risk assessment of human health and the environment at a small site in Manitoba contaminated with groundwater uranium.

Ecological risk assessment of radioactivity at the Stark Lake mine. NWT.

Radiological assessment of foods and the environment at Lutsel K'e, NWT and Baker Lake, NU.

Develop scope of aquatic and terrestrial monitoring programs for contaminants at the Colomac site, NWT, a former gold mine. Activities included the detailed statistical review of monitoring programs post remediation.

Review and assessment of environmental liabilities at a mine in northern Manitoba.

Develop a statistical guide for the design of assessment and monitoring program effectiveness.

Co-lead author on the environmental effects of oil and gas activities in the Arctic (Arctic Monitoring and Assessment Program).

SHAWN KOZMICK
STAFF TECHNICIAN / GIS SPECIALIST

Mr. Shawn Kozmick is a Staff Technician / GIS Specialist at Knight Piésold's North Bay office. He has been involved in GIS for over 8 years, and has been working in the Environmental industry for over 10 years. As a GIS Specialist and a Forestry Technician, his specialties include mapping with ESRI ArcGIS, forest management planning and layout, data collection, and GPS data analysis. Shawn has been developing skills with AutoCAD and has a good grasp on the program, which is a great benefit to have reliability within both AutoCAD and GIS. His experience in forestry has influenced the pursuit into the GIS industry, and he has gained valuable experience working in Ontario, Alberta, British Columbia and Nunavut.

KEY SKILLS / QUALIFICATIONS

- Geographic Information Systems (GIS) with ESRI ArcGIS Version 9.1 - 10.3
- ArcGIS for Desktop 3D Analyst, Spatial Analyst, and Network Analyst Extensions
- AutoCAD version 2016 and previous
- ArcIMS, ArcObjects, ArcINFO, Global Mapper, EZ Tag, MapSource and Google Earth Pro
- Visual Basic 6.0 and VB.NET, SQL, HTML, and AML
- Remote Sensing with PCI Geomatica Prime Version 10
- Forest Planning, Harvest Operation Layout, and Forest Inventory

SPECIFIC RELEVANT EXPERIENCE

- **Farim Phosphate Project, Guinea-Bissaua -** GIS support for site layout planning at both the mine site and port site. Viewshed analysis using ArcGIS 3D Analyst and land use delineating using satellite imagery.
- **Eagle's Nest Project, ON, Canada -** GIS and field support for the study area from Highway 808 to the Esker Mine Camp. Tasks include data management, digitizing, and creating detailed figures for analysis and presentations. Field support includes aquatic assessments, hydrology flow analysis, soil sampling, groundwater sampling, and air quality control.
- **Errington Sites, Xstrata Zinc Support, ON, Canada -** GIS support and field support for the study area outside of Sudbury, creating figures showing surficial geology and forest resource inventory data, data management, and verifying geographic coordinates. Field support includes aquatic assessments, surface water collection, hydrology flow analysis, groundwater sampling and groundwater well response testing.
- **Sisson Project, NB, Canada -** Support for the site monitoring program, performing data entry and low flow and peak flow analysis.
- **Mary River Project, NU, Canada -** GIS and field support for the environmental studies of sediment locations, water and stream locations, and creating detailed figures.
- **Iqaluit Hydro Electric Project, NU, Canada -** GIS support for project location figures and obtaining satellite imagery and LIDAR data.
- **Colluli Potash Project, Eritrea -** GIS support for the planning and project location for the development of an open pit potash mine. This area has many archeological grave sites and historic areas that should not be disturbed, and requires site access roads and water collection planning for drilling purposes.
- **Bissett Creek Project, ON, Canada -** GIS and field support for groundwater sampling, and species at risk mapping for the planning of the mine location and infrastructure components. Studies have included the Whip Poor Will population and habitat area as well as the Blanding's Turtle. The focus is directed on to determining if the infrastructure will have an effect on each species, and which type of forest cover environment they inhabit, as well as any disturbed areas that are present.

Knight Piésold Ltd.
Canada

EDUCATION

Advanced Certificate GIS - Applications Specialist, Sault College of Applied Arts and Technology, Canada, 2008

Forestry Technician, Sir Sandford Fleming College, Canada, 2004

SPECIALIZATIONS

- GIS - ESRI ArcGIS with ArcINFO
- Data Management, Collection, and Analysis
- Customizing with ArcObjects
- Species At Risk Mapping
- Vegetation Mapping
- Digitizing Catchments and Watersheds
- Forestry - Forest Management Planning and Implementing
- GPS Functionality and Data Importing/Exporting Tree, Wildlife, and Fish Species Identification

APPENDIX 1-F

APPLICALBE LEGISLATION AND TREATIES

(8 Pages)

TABLE 1F.1

GB MINERALS LTD.
FARIM PHOSPHATE PROJECT

ENVIRONMENTAL AND SOCIAL IMPACT ASSESSMENT
VOLUME 1 - INTRODUCTION TO THE ASSESSMENT

SUMMARY OF RELEVANT GUINEA-BISSAU LEGISLATION

Print 14/09/2015 3:52 PM

Name of Law, Code, or Article	Date Adopted	Description
Decree-Law No. 11/2011 creating the National Institute of Meteorology of Guinea-Bissau	2011	Approves the creation of the National Institute of Meteorology of Guinea-Bissau (INM-GB), which is responsible for implementing national policy, collection and analysis of data, delivering the weather forecast and dissemination of information, research on climate change and potential impacts on local populations.
Decree-Law No. 10/2011 approving the Basic Fishing Legislation	2011	Regulates fishing and fishery resources, including licensing requirements, processing, and hygiene controls. It also establishes fishery inspections and fines to be paid for illegal fishing activity.
Decree No. 24/2011 approving the Regulation on Artisanal Fisheries	2011	Regulates artisanal fishing within inland waters and territorial sea to enable sustainable exploitation. It specifies fishing zones and requirements for fishing vessels, licenses, gear and methods. It also prescribes inspections, controls and fines to be paid for illegal artisanal fishing activities.
Decree-Law No. 8/2011 regulating economic activities in industry, trade and tourism sector	2011	Regulates economic activities in industry, trade and the tourism sector. It also specifies requirements for authorisation to perform economic activities related to: human health, environmental preservation, human or goods safety, and natural resource protection.
Order of 21 March 2011 creating the Environmental Impact Assessment Institution (CAIA)	2011	Creates the Environmental Impact Assessment Institution (CAIA) aimed at supporting enterprises and institutions in environmental impact assessment, guarantees the monitoring of mitigation measures and gives advice on research related to this sector.
Decree-Law No. 5-A/2011 establishing the legal framework of protected areas	2011	Establishes the legal framework for protected areas, including the classification and declassification of protected areas, and sets out the authorities responsible for the protection of natural ecosystems, fauna and flora, including promotion of its sustainable development. It classifies protected areas as parks; nature reserves; national monuments; species habitat management areas; community protected areas; forests and sacred sites.
Decree-Law No. 5/2011 approving the New Forestry Law	2011	The Forestry Law aims to promote sustainable exploitation of forestry resources, achieving improved quality of life (including socio-economic and cultural development) through the promotion and rational exploitation of forestry resources. Establishes the requirements for authorised forest exploitation activities, public and private forest management, tree logging authorization/prohibition and wood sale, and establishes forestry protection measures in order to avoid forest fires and sanctions for offenders.

TABLE 1F.1

GB MINERALS LTD.
FARIM PHOSPHATE PROJECT

ENVIRONMENTAL AND SOCIAL IMPACT ASSESSMENT
VOLUME 1 - INTRODUCTION TO THE ASSESSMENT

SUMMARY OF RELEVANT GUINEA-BISSAU LEGISLATION

Print 14/09/2015 3:52 PM

Name of Law, Code, or Article	Date Adopted	Description
Decree-Law No. 6/2006 amending Law No. 1/2000 approving the Mining Act	2000	Establishes new annual taxes for mineral exploitation, reflecting the categories of mining activity according to the mining community legislation in the framework of West African Economic and Monetary Union countries (UEMOA).
Decree No. 10/12 creating the Institute of Biodiversity and Protected Areas (IBAP)	2005	Establishes the composition, duties and responsibilities of the Institute of Biodiversity and Protected Areas. Its role is to propose, coordinate and implement policy and other activity related to biodiversity and protected areas, to promote and preserve local ecosystems, and promote the socio-economic and sustainable use of natural resources, including water resources in continental and marine areas.
Decree-Law No. 2/2004 establishing the basic norms for protection, promotion and exploitation of Wildlife	2004	Establishes the basic norms for protection, promotion and exploitation of wildlife. It specifies requirements for activities related to wildlife: endangered animal species protection, authorised wild animals to be caught, hunting areas, authorized methods and seasons. It also regulates hunting licence requirements, controls and sanctions for illegal activity.
Law No. 1/2000 approving the Mining Act	2000	The Mining Act regulates any geological and mining activity and in particular: geological research, investigation, finding and classification of minerals, characterization, assessment, exploitation, commercialisation, and use of existing mineral resources in the soil, underground, except for oil and hydrocarbons products. It establishes the provisions regulating rights related to National mineral resources exploitation and competencies for implementation and control of established objectives for prospection, mining exploration, treatment and commercialization of minerals within the territory of Guinea-Bissau.
Land Act No. 5/98	1998	Regulates land-use planning and rational exploitation of land. Land is property of the Government of the Republic of Guinea-Bissau, its exploitation is allowed only under concession or authorization granted by the Government. This Law lays down the requirements to be satisfied in order to obtain a land concession.
Decree-Law No. 3/97 approving the Legal Regime for Protected Areas	1997	Approves the legal regime for protected areas and specifies the requirements for protected areas to preserve natural ecosystems, to protect flora, fauna and biological diversity, and promote the rational and sustainable economic use, including water courses, lakes, sea, which can be classified by Decree as National or natural parks, sanctuary, protected areas or sacred forests.

TABLE 1F.1

GB MINERALS LTD.
FARIM PHOSPHATE PROJECT

ENVIRONMENTAL AND SOCIAL IMPACT ASSESSMENT
VOLUME 1 - INTRODUCTION TO THE ASSESSMENT

SUMMARY OF RELEVANT GUINEA-BISSAU LEGISLATION

Print 14/09/2015 3:52 PM

Name of Law, Code, or Article	Date Adopted	Description
Legal Framework on Protected Areas	1996	Establishes the basic legislation on protected areas, specifying the requirements to be satisfied in order to preserve flora and wildlife ecosystems and to manage forestry resources. It concerns protected areas classification and creates the Protected Areas' Council. It lays down the conditions to be satisfied in order to obtain an authorisation for forest exploitation. Sanctions and penalties are prescribed for unauthorized activities
Decree No. 52/92 creating the National Committee on Water (CNA)	1992	Creates the National Committee on Water (CNA) and its composition, duties and responsibilities to: design policy on water resources, control public and private water exploitation, under the supervision of the Inter-ministerial Committee of Waters (CIMA).
Decree-Law No. 5-A/1992 establishing the Water Code	1992	Establishes the Water Code and its objectives: defining the legal regime of all activities relevant with water management, defining the institutional framework to implement national policy on water rights, guaranteeing the control and management of water resources, regulating water uses, guaranteeing the protection of the water quality in order to avoid freshwater pollution or its waste.
Act No. 3/85 on delimitation of the territorial waters, the contiguous zone and the continental shelf	1985	Establishes the maritime boundaries between the Republic of Guinea-Bissau and the Republic of Guinea. It specifies geographical coordinates of maritime zones, territorial sea (12 nautical miles), and EEZ between the aforementioned countries and prohibits non-authorised foreign fishing activity within the EEZ.
Act No. 3/78 establishing the territorial sea and the Exclusive Economic Zone (EEZ) of the Republic of Guinea-Bissau	1978	Establishes the territorial sea and the Exclusive Economic Zone (EEZ) of the Republic of Guinea-Bissau. The extension of the territorial sea is established on the baselines fixed by the Convention between France and Portugal of 1886. It specifies geographical coordinates of the aforementioned areas and prohibits foreign fishing activity within the EEZ.

TABLE 1F.2

GB MINERALS LTD.
FARIM PHOSPHATE PROJECT

ENVIRONMENTAL AND SOCIAL IMPACT ASSESSMENT
VOLUME 1 - INTRODUCTION TO THE ASSESSMENT

INTERNATIONAL TREATIES APPLICABLE TO GUINEA-BISSAU

Print 14/09/2015 3:54 PM

Title	Date of Signature/Ratification
Environmental Conventions	
Agreement on the importation of educational, scientific and cultural Materials	24.09.2013
Nagoya-Kuala Lumpur Supplementary Protocol on Liability and Redress to the Cartagena Protocol on Biosafety	24.09.2013
Nagoya Protocol on Access to Genetic Resources and the Fair and Equitable Sharing of Benefits Arising from their Utilization to the Convention on Biological Diversity	24.09.2013
United Nations Convention on Contracts for the International Carriage of Goods Wholly or Partly by Sea	24.09.2013
Protocol agreed between the European Union and the Republic of Guinea-Bissau setting out fishing opportunities and the financial contribution provided for in the Fisheries Partnership Agreement between the two parties currently in force (*)	20.12.2011
Convention for Cooperation in the Protection, Management and Development of the Marine and Coastal Environment of the Atlantic Coast of the West, Central and Southern Africa Region (Abidjan Convention)	07.02.2011
Protocol of the Abidjan Convention Concerning Cooperation in Combating Pollution in Cases of Emergency	07.02.2011
Agreement amending for the second time the Partnership Agreement between the members of the African, Caribbean and Pacific Group of States, of the one part, and the European Community and its Member States, of the other part, signed in Cotonou on 23 June 2000, as first amended in Luxembourg on 25 June 2005 (*)	22.06.2010
Convention for the Suppression of Unlawful Acts Against the Safety of Maritime Navigation	12.01.2009
Agreement between the European Union and the Republic of Guinea-Bissau on the Status of the European Union Mission in Support of Security Sector Reform in the Republic of Guinea-Bissau	11.07.2008
Fisheries Partnership Agreement between the European Community and the Republic of Guinea-Bissau for the period 16 June 2007 to 15 June 2011	15.04.2008
Convention Concerning the Protection of the World Cultural and Natural Heritage	28.01.2006
Agreement On The Conservation Of African-Eurasian Migratory Waterbirds	01.11.2006
Agreement in the form of an Exchange of Letters concerning the provisional application of amendments to the Protocol establishing the fishing opportunities and the compensation provided for in the Agreement between the European Economic Community and the Government of the Republic of Guinea-Bissau on fishing off the coast of Guinea-Bissau for the period 16 June 2001 to 15 June 2006, and in Decision 2001.179.EEC setting the terms for financial support to Guinea-Bissau in the fisheries sector	26.04.2004
Agreement in the form of an Exchange of Letters concerning the provisional application of the Protocol establishing the fishing opportunities and the	30.05.2001

TABLE 1F.2

GB MINERALS LTD.
FARIM PHOSPHATE PROJECT

ENVIRONMENTAL AND SOCIAL IMPACT ASSESSMENT
VOLUME 1 - INTRODUCTION TO THE ASSESSMENT

INTERNATIONAL TREATIES APPLICABLE TO GUINEA-BISSAU

Print 14/09/2015 3:54 PM

Title	Date of Signature/Ratification
compensation provided for in the Agreement between the European Economic Community and the Government of the Republic of Guinea-Bissau on fishing off the coast of Guinea-Bissau for the period 16 June 2001 to 15 June 2006	
International Treaty on Plant Genetic Resources for Food and Agriculture	06.06.2002
Stockholm Convention on Persistent Organic Pollutants	24.04.2002
Partnership agreement between the members of the African, Caribbean and Pacific Group of States of the one part, and the European Community and its Member States, of the other part, signed in Cotonou on 23 June 2000 - Protocols - Final Act – Declarations	23.06.2000
Cartagena protocol on biosafety to the convention on biological diversity	24.05.2000
Amendment to the Montreal Protocol on substances that deplete the ozone layer	03.12.1999
Rotterdam Convention on the prior informed consent procedure for certain hazardous chemicals and pesticides in international trade	10.09.1998
Kyoto Protocol to the UN Framework Convention on Climate Change	11.12.1997
International Plant Protection Convention - New revised text approved by Resolution 12.97 of the 29th Session of the FAO Conference in November 1997 – Declaration	07.11.1997
Amendment to the Montreal Protocol on substances that deplete the ozone layer, adopted at the ninth meeting of the Parties	17.09.1997
Agreement for the Implementation of the Provisions of the United Nations Convention on the Law of the Sea of 10 December 1982 relating to the Conservation and Management of Straddling Fish Stocks and Highly Migratory Fish Stocks	04.08.1995
United Nations Convention to Combat Desertification in Countries Experiencing Serious Drought and/or Desertification, particularly in Africa	17.06.1994
Amendment to the Montreal Protocol on Substances that Deplete the Ozone Layer	25.11.1992
United Nations Convention on Biological Diversity	05.06.1992
United Nations Framework Convention on Climate Change	09.05.1992
Bamako Convention On The Ban Of The Import Into Africa And The Control Of Transboundary Movement And Management Of Hazardous Wastes Within Africa	01.03.1991
Convention on International Trade in Endangered Species of Wild Fauna and Flora (CITES)	16.05.1990
Convention on Wetlands of International Importance (the Ramsar Convention)	14.05.1990
Amendment to the Montreal protocol on substances that deplete the ozone layer (London Amendment)	29.06.1990
Basel Convention on the control of transboundary movements of hazardous wastes and their disposal	22.03.1989
Montreal Protocol on substances that deplete the ozone layer	16.09.1987
Vienna Convention for the protection of the ozone layer	22.03.1985
United Nations Convention on the Law of the Sea (UNCLOS)	10.12.1982

TABLE 1F.2

GB MINERALS LTD.
FARIM PHOSPHATE PROJECT

ENVIRONMENTAL AND SOCIAL IMPACT ASSESSMENT
VOLUME 1 - INTRODUCTION TO THE ASSESSMENT

INTERNATIONAL TREATIES APPLICABLE TO GUINEA-BISSAU

Print 14/09/2015 3:54 PM

Title	Date of Signature/Ratification
Agreement establishing the Common Fund for Commodities	27.06.1980
Convention on the conservation of migratory species of wild animals (Bonn Convention)	23.06.1979
Constitution of the Food and Agriculture Organisation of the United Nations	16.10.1945
Social, Human Rights, and Labour Conventions	
Protocol against the Illicit Manufacturing of and Trafficking in Firearms, Their Parts and Components and Ammunition, supplementing the United Nations Convention against Transnational Organised Crime	24.09.2013
Convention against Torture and Other Cruel, Inhuman or Degrading Treatment or Punishment	24.09.2013
Convention on the Prevention and Punishment of the Crime of Genocide	24.09.2013
Optional Protocol to the International Covenant on Civil and Political Rights	24.09.2013
Second Optional Protocol to the International Covenant on Civil and Political Rights, aiming at the abolition of the death penalty	24.09.2013
International Covenant on Civil and Political Rights	24.09.2013
International Convention for the Protection of All Persons from Enforced Disappearance	signature only on 24.09.2013
Convention on the Rights of Persons with Disabilities	signature only on 24.09.2013
Optional Protocol to the Convention on the Rights of Persons with Disabilities	signature only on 24.09.2013
Optional Protocol to the Convention against Torture and Other Cruel, Inhuman or Degrading Treatment or Punishment	signature only on 24.09.2013
Optional Protocol to the Convention on the Rights of the Child on a communications procedure	signature only on 24.09.2013
Optional Protocol to the Convention on the Elimination of Discrimination against Women, 1999	05.08.2009
Minimum Age Convention	05.03.2009
Worst Forms of Child Labour Convention	26.08.2008
African Charter on the Rights and Welfare of the Child	19.06.2008
United Nations Convention against Corruption	31.10.2003
Protocol Against the Smuggling of Migrants by Land, Sea and Air, supplementing the United Nations Convention Against Transnational Organised Crime	12.12.2000
Protocol to Prevent, Suppress and Punish Trafficking in Persons, Especially Women and Children, supplementing the United Nations Convention against Transnational Organised Crime	12.12.2000
United Nations Convention Against Transnational Organised Crime	15.11.2000
International Convention on the Elimination of All Forms of Racial Discrimination,	Signature only on

TABLE 1F.2

GB MINERALS LTD.
FARIM PHOSPHATE PROJECT

ENVIRONMENTAL AND SOCIAL IMPACT ASSESSMENT
VOLUME 1 - INTRODUCTION TO THE ASSESSMENT

INTERNATIONAL TREATIES APPLICABLE TO GUINEA-BISSAU

Print 14/09/2015 3:54 PM

Title	Date of Signature/Ratification
1965	12.09.2000
International Covenant on Civil and Political Rights, 1966	Signature only on 12.09.2000
Rome Statute of the International Criminal Court, 1998	Signature only on 12.09.2000
Convention against Torture and Other Cruel, Inhuman or Degrading Treatment or Punishment, 1984	Signature only on 12.09.2000
International Convention on the Protection of the Rights of All Migrant Workers and Members of Their Families, 1990	Signature only on 12.09.2000
Optional Protocol to the Convention on the Rights of the Child on the involvement of children in armed conflict, 2000	Signature only on 08.09.2000
Optional Protocol to the Convention on the Rights of the Child on the sale of children, child prostitution and child pornography, 2000	Signature only on 08.09.2000
International Covenant on Economic, Social and Cultural Rights, 1966	02.07.1992
Convention on the Rights of the Child, 1990	20.08.1990
Geneva Convention, Additional Protocol I 1977	21.10.1986
Geneva Convention, Additional Protocol II 1977	21.10.1986
African Charter on Human and Peoples' Rights	04.12.1985
Convention on the Elimination of All Forms of Discrimination against Women, 1979	23.08.1985
Forced Labour Convention	21.02.1977
Right to Organise and Collective Bargaining Convention	21.02.1977
Equal Remuneration Convention	21.02.1977
Abolition of Forced Labour Convention	21.02.1977
Discrimination (Employment and Occupation) Convention	21.02.1977
Hours of Work (Industry) Convention	21.02.1977
Night Work of Young Persons (Industry) Convention	21.02.1977
Workmen's Compensation (Agriculture) Convention	21.02.1977
Weekly Rest (Industry) Convention	21.02.1977
Workmen's Compensation (Accidents) Convention	21.02.1977
Workmen's Compensation (Occupational Diseases) Convention	21.02.1977
Equality of Treatment (Accident Compensation) Convention	21.02.1977
Minimum Wage - Fixing Machinery Convention	21.02.1977
Underground Work (Women) Convention	21.02.1977
Employment Service Convention	21.02.1977
Night Work (Women) Convention (Revised)	21.02.1977
Accommodation of Crews Convention (Revised)	21.02.1977
Weekly Rest (Commerce and Offices) Convention	21.02.1977

Knight Piésold CONSULTING

TABLE 1F.2

GB MINERALS LTD.
FARIM PHOSPHATE PROJECT

ENVIRONMENTAL AND SOCIAL IMPACT ASSESSMENT
VOLUME 1 - INTRODUCTION TO THE ASSESSMENT

INTERNATIONAL TREATIES APPLICABLE TO GUINEA-BISSAU

Print 14/09/2015 3:54 PM

Title	Date of Signature/Ratification
Indigenous and Tribal Populations Convention	21.02.1977
Convention Relating to the Status of Refugees, 1951	11.02.1976
Protocol Relating to the Status of Refugees, 1967	11.02.1976
Geneva Conventions I,II, III, IV 1949 (Number of reservations made upon accession)	21.02.1974

I:\3\01\00520\02\A\Report\Volume 1 - Intro (Report 1)\Appendices\Volume 1 - App 1F - Applicable Legislation and Treaties\FINAL\Table 1F.2 Applicable Treaties-REV 0.docx

REV	DATE	DESCRIPTION	PREP'D	RVW'D
0	15SEP'15	ISSUED WITH REPORT NB301-520/2-1	MAS	RAC

APPENDIX 1-G

PUBLIC CONSULTATION REPORTS

Appendix 1-G1 Public Consultation Report (Tropica April 2012)
Appendix 1-G2 Public Consultation Report (Golder 2014c)
Appendix 1-G3 Public Consultation Report (Eco Progresso 2015)

APPENDIX 1-G1

PUBLIC CONSULTATION REPORT (TROPICA APRIL 2012)

(26 Pages)

FARIM PHOSPHATE MINING PROJECT

Guinea Bissau

Environmental and Social Impact Assessment

"Social" Studies

PUBLIC CONSULTATION Report

Submitted to

GB Minerals AG
Zonnmatt, 19, CH 6343
Rotkreuz - Switzerland

TROPICA Environmental Consultants

Liberté VI, Villa No. 8181 • BP 5335 Dakar-Fann SENEGAL
Tél. (221) 33 867 18 98 - Fax (221) 33 867 18 99
E-mail : tropica@orange.sn

April 5th 2012

TABLE OF CONTENT

I. INTRODUCTION **3**

II. THE PROJECT **3**

III. OBJECTIVE OF THE PUBLIC CONSULTATION **3**

IV. REGULATORY AND LEGISLATIVE FRAMEWORK FOR PUBLIC CONSULTATIONS **4**

4.1 NATIONAL LEGISLATION AND PRACTICES 4

4.2 INTERNATIONAL GUIDELINES AND PROCEDURES 4

V. THE PUBLIC CONSULTATION PROCESS **5**

5.1. PROJECT PUBLIC CONSULTATION PROGRAMME 5

5.2. THE SCOOPING PUBLIC CONSULTATION 5

5.2.1. RECOGNITION TRIP 5

5.2.2. PLANNING OF CONSULTATION DESSIONS 6

5.2.4. PROJECT PERSONNEL INVOLVED 6

5.2.5. STAKEHOLDERS 6

VI. PUBLIC CONSULTATION SESSIONS **8**

VII. ATTENDANCE **10**

VIII. ISSUES AND CONCERNS RAISED DURING THE CONSULTATION **14**

IX. CONCLUSION AND RECOMMENDATIONS **15**

I. INTRODUCTION

GB Minerals AG (GBMAG) is considering to develop a phosphate mining project in Farim, republic of Guinea Bissau. Within that framework, Definitive Feasibility Study (DFS) including an Environmental and Social Impact Assessment (ESIA) is being undertaken. Tropica Environmental Consultants (Tropica) is committed to carry out the "Social" Section of the ESIA which includes Public Consultation. The Public Consultation was conducted over a week period, starting from March 5th, 2012.

The current report aims to provide a synthesis on the mechanisms used by the consultation team to inform communities, institutions -both private and public- and NGO. It presents the procedure adopted by the consultation team and the major concerns and issues raised during the consultation.

II. THE PROJECT

The Farim Phosphate Mining project is located in the north of Guinea Bissau, Oio region, about 5 km west of Farim, the capital city of the region. The proposed project components include the following: an open pit mine, a processing plant, a slurry pipeline for transferring the ore from the mine to the port. The latter will be located at Tchugué, approximately 80 km south of Farim. It is understood that each of these components will be associated with some facilities. These include: overburden storage facilities; intermediate product storage facility; slurry pumping station; tailings storage facility; accommodation areas; power station and related amenities; water supply; maintenance facility, office, access roads; haul roads; ore storage facilities in the port site; etc.

III. OBJECTIVE OF THE PUBLIC CONSULTATION

The public consultation aims to ensure sustainable project design and operating and decision making by incorporating local community knowledge, views and concerns in technical studies, project design and decision making and to enable the project sponsor to recognize community concerns early.

The major objectives of the consultation are, among others:

- To give informational background on the proposed project's activities and an overview on its design frame and planning;
- To provide stakeholders with the opportunity to voice their opinions and concerns; and
- To seek input and comment on the strengths, weaknesses and issues of concern about the project activities and design.

IV. REGULATORY AND LEGISLATIVE FRAMEWORK FOR PUBLIC CONSULTATIONS

4.1 NATIONAL LEGISLATION AND PRACTICES

The Guinea Bissau law on environmental assessment requires that participation be considered as a key aspect when performing an environmental and social assessment. The law requires a full participation of the project's stakeholders who must be informed in a culturally appropriate manner. According to this law a public hearing must be organized to present the project potential impacts as well as the measures that are proposed to manage these impacts. To that end the ESIA report needs to be made available and accessible to the public the comments of which are collected and taken into account in the final ESIA report.

4.2 INTERNATIONAL GUIDELINES AND PROCEDURES

The International Finance Corporation (IFC) recently released an updated version of its Performance Standards on environmental and social sustainability. The IFC uses the Performance Standard to manage the environmental risks and impacts associated with any projects seeking funding through the IFC.

The Performance Standards require clients to engage with affected communities through disclosure of information, consultation, and informed participation, in a manner commensurate with the risks to and impacts on the affected communities.

IFC Performance Standards are the following:

- Performance Standard 1: Social and Environmental Assessment and Management System;
- Performance Standard 2: Labour and Working Conditions;
- Performance Standard 3: Pollution Prevention and Abatement;
- Performance Standard 4: Community Health, Safety and Security;
- Performance Standard 5: Land Acquisition and Involuntary Resettlement;
- Performance Standard 6: Biodiversity Conservation and Sustainable Natural Resource Management;
- Performance Standard 7: Indigenous Peoples; and
- Performance Standard 8: Cultural Heritage.

IFC Performance standard 1 stipulates clearly the need for communities to be fully informed and consulted. Through its guide and manual, IFC provides action oriented guidelines to emphasize the need for the project sponsor to ensure that the public consultation process is accessible to all potentially affected stakeholders. IFC Performance stand 1 emphasize on three major dimensions:

- Projects are required to have a social and environmental management system (ESMS) in place throughout the life of each project receiving funding through IFC.

As part of the ESMS, companies must engage a consultation with communities that are subject to risks and adverse impacts from the project and must respond to concerns raised by these communities.

- Consultation must start early, based on prior disclosure of information to communities in an accessible format. It must be free and documented.

- The updated IFC Performance Standards establish additional consultation requirement for project with "potentially significant adverse impacts" on local communities. In such cases, a company must undertake an "Informed Consultation and Participation (ICP effort) build on the basic Consultation process.

The company is expected to use the information collected in the consultation to mitigate impacts, tailor its implementation and identify appropriate mechanisms for the sharing of project benefits.

Most notably, IFC Performance standard 7 now requires that a company seeks the "free and informed consent of affected indegenous people.

Performance Standard 7 also notes that consent does not always require unanimity. Presumably, what is required will depend on the process that the company agreed upon with the community.

V. THE PUBLIC CONSULTATION PROCESS

5.1. PROJECT PUBLIC CONSULTATION PROGRAMME

GB Minerais have undertaken a series of consultation with the villages that are located in the proposed mine area.

The summaries of GB Minerais consultations reports are in the annex 5.

5.2. THE SCOOPING PUBLIC CONSULTATION

5.2.1. RECOGNITION TRIP

From 19 through 25 February the Public Consultation team visited the project area and some institutions in Bissau as well.

The team identified the villages to be considered in the consultation; the existing ethnic groups, the different languages that are spoken in the area; the existing means of communication including the radio stations broadcasting in the area; NGOs and Organizations which intervene in these villages and the regional public bodies, mainly those which play a key role in sectors of environmental or social interest.

5.2.2. PLANNING OF CONSULTATION DESSIONS

This first round of consultation was a scooping consultation; it is expected it allows a better understanding of the project and the ESIA which is undertaken to guide the project to properly manage its potential environmental and social impacts.
Following the recognition trip, Tropica prepared the consultation campaign through the following activities:

- Finalizing the consultation materials (posters BIDs) previously drafted by Golder;

- Drafting of the consultation programme (Annexe 1);

- Drafting of a media plan consisting of releasing communiqués through the radio stations broadcasting in the targeted villages (Annexe 2)

- Discussions with actors involved in the preparation and/or organization of the consultation among which the project staff, regional administration, the The committee composed of 11 villages in the ore area and the village Chiefs.

5.2.4. PROJECT PERSONNEL INVOLVED

The following project staff supported Tropica in the preparation of the consultations or participated in the consultation sessions.

- Country manager (René),
- Site Manager (Baba),
- Other project support staff (Camara, Martin).

5.2.5. STAKEHOLDERS

Stakeholder identification was a crucial component of the consultation process and consisted of identifying properly all people and organizations that are likely to be affected or could influence the project. Two distinct stakeholder groups can be identified. Primary Stakeholders meaning people who are likely to be directly affected by the project (host communities at the project site) and Secondary Stakeholders, i.e. individuals or groups with an interest in the project, local and national government, policy makers, advocacy groups and NGOs who are not directly impacted but a legitimate interest in the project.

It's from this perspective that the Tropica team in charge of the public consultation carried out a recognition mission in Bissau and in Farim through the period of 19-25 of February 2012, to carefully identify the various stakeholders to be involved.

The whole week was spent collecting first hand information regarding primary and secondary stakeholders groups identified at different levels. Visits were made to state as well as public offices. Among the offices and departments visited, we will cite at Bissau: Department of environment, department of fisheries, Swissaid and UICN

officials, Public Radio and Television Company, other private radios (Solmansi, Dialicounda, Nossa etc).

Visits were also undertaken at the community level to identify village chiefs and other traditional leaders, women and youth associations. A total number of 24 villages and hamlets located alongside the road to Farim, the project and the port sites were visited during the stakeholder identification trip. The following stakeholders were consulted and informed on the planned activities. At the end of that important step of the process, the consultation programme was drawn as shown in annex 1.

☞ **Local communities**

- Local residents near by the proposed mine and the port areas and residents alongside the road to Farim, interested local groups and the general public were invited to attend the meetings through community notices, direct contacts and radio advertisements (annex 2).

Besides Farim, the residents of eleven (11) villages in the proposed mine area, about twenty (20) along the road to Farim (in Mansoa and Mansaba Sectors) and five (05) in the port area (Nhacra Sector) were targeted as shown in the consultation programme.

These meetings aimed at ensuring that communities fully understand the nature of the phosphate exploitation, the likely associated impacts, and benefits that may be derived from project operations and long term legacy of the project.
In each of the public meetings that were held in six villages following the formal planning in, sufficient time was given for discussions, questions and comments.

- A Committee which is composed of the representatives of the eleven villages that are located in the proposed mine area is set up about four years ago owing to the support of a local NGO. Its main objective is to manage the interface between le project and the communities living in the above mentioned villages.

☞ **Local public bodies**

Farim is the capital city of the Oio Region and is administered by a Governor. It includes five Sectors (Farim, Mansaba, Mansoa, Bissora and Nhacra) administered by Administrators. Civil servants in charge of sectors involving environmental and social interest at these two levels were invited, through the Governor, to attend the consultation.

☞ **Non Governmental Organizations**

Mining projects around the world are under increasing scrutiny due to their potential impacts on rural people. Experience has shown that NGO involvement and consultation with them at an early stage can be valuable.

In Guinea Bissau IUCN, Swissaid, Cafo are among the main NGOs that are intervening in the mining sector. They are interested in the environmental and social impacts of mining projects even if the country has not hosted yet an operating mining project. These NGOs are involved in awareness raising and advocacy. The phosphate of Farim, the bauxite of Boé and the offshore oil are their main focus. Recently, under the auspice of these NGO a Working Group on Oil and Extractive Industries (WGO-EI) is set up and constitutes a more or less formal framework to keep on doing the work initiated by these NGOs. Beside the three NGOs the WGO-EI comprises the institute of biodiversity (IBAP), the Environment Directorate, the Forest and Fauna Directorate, the Mining Directorate (DMG), the Office of Environmental Assessment (CAIA), the Network of Members of parliament for Sustainable Development, the Network of Ecological Journalists, the Movement of Civil Society for Peace, Democracy and Development and Petroguin (Guinea Bissau oil development company). Through a protocol signed with mining ministry, the WGO-EI is commited to giving full technical support in terms of decision making

☞ **The media**

Journalists from the written press and radios broadcasting in the project area were invited to attend the consultation. Radios and newspapers are very interested in the project they often release information on. Also the communities, mostly those in the project area are informed about the project through the media.

The targeted broadcastings stations are: Radio Nationale, Radio Galaxia de Pindjiquiti, Radio Bombolongue, Radio Nosa, Radio Sol Mansi. As for the written press, the following were invited to attend the consultation: NO PINCHA, ULTIMA HORA, DE NOTICIAS, EXPRESSO BISSAU. Radio journalists from five radios responded favorably to the invitation unlike written press journalists.

VI. PUBLIC CONSULTATION SESSIONS

Tropica organized meetings with different groups of stakeholders to give them opportunity to learn about the project on the one hand and to voice their concerns about the project's environmental and social aspects and ask questions on the other hand. It could be said as a general statement that meetings were well attended despite some unfavorable factors like the pre election context.

On arrival, attendees were welcomed registered and thanked for their attendance. They were then invited to follow the presentation, ask questions or/and make comments about the project's activities. The list of attendants is joined in annex 3.

The consultation session was structured into two parts: a brief summary of the project was made, followed by a display and distribution of printed material explaining different typical mining phases, design options and how the proposed project activities fit into that typical scheme.

The posters were displayed on the walls for indoor meetings. Locally made display panels were used for the open air meetings organized at the community level. All the meetings were video taped

Some photos

At the community levels, the presentations and discussions were made in local languages (mainly in Mandinga and in Creole) to encourage full participation and a mutual understanding.

After each presentation, the audience was invited to ask questions and/or give comments verbally. They also were encouraged, if needed, to send comments later to Tropica or the project by phone, fax or e-mail if they wish.

Tropica team commented on and responded to every question raised. Individual's comments and questions received are recorded and attached to this report (annex 4)

MEETINGS WITH SPECIAL INTEREST GROUPS

- Three citizen workshops were held with the following: The Working Group on Oil and extractive industries, the Regional administration and the media (radios).

These meetings were held to get an understanding of the concerns and views of particular groups, such as the media, officials from the concerned ministries civil society, NGO, etc. These workshops have provided the participants with an opportunity to ask important questions and point out major issues of concern.

- Six public meetings were held at the community level and involved 38 villages. The following are the villages that hosted the meetings:

  - Saliqhenhe,
  - Cabseque,
  - Mansaba,
  - Mansoa, and
  - Nhacra.

Villages and hamlets surrounding these latter villages attended the meetings organized in a very participatory way to ensure that their views will be heard and taken into account. Transportation arrangements were made available by the project for populations who needed to be transported.

VII. ATTENDANCE

As a general statement we would say that the level of attendance was quite good but could be better without the prevailing pre-election context. A total number of 424 persons attended the consultation (annex 3).

Figure 1: Consultation sessions for the communities in the proposed mine area

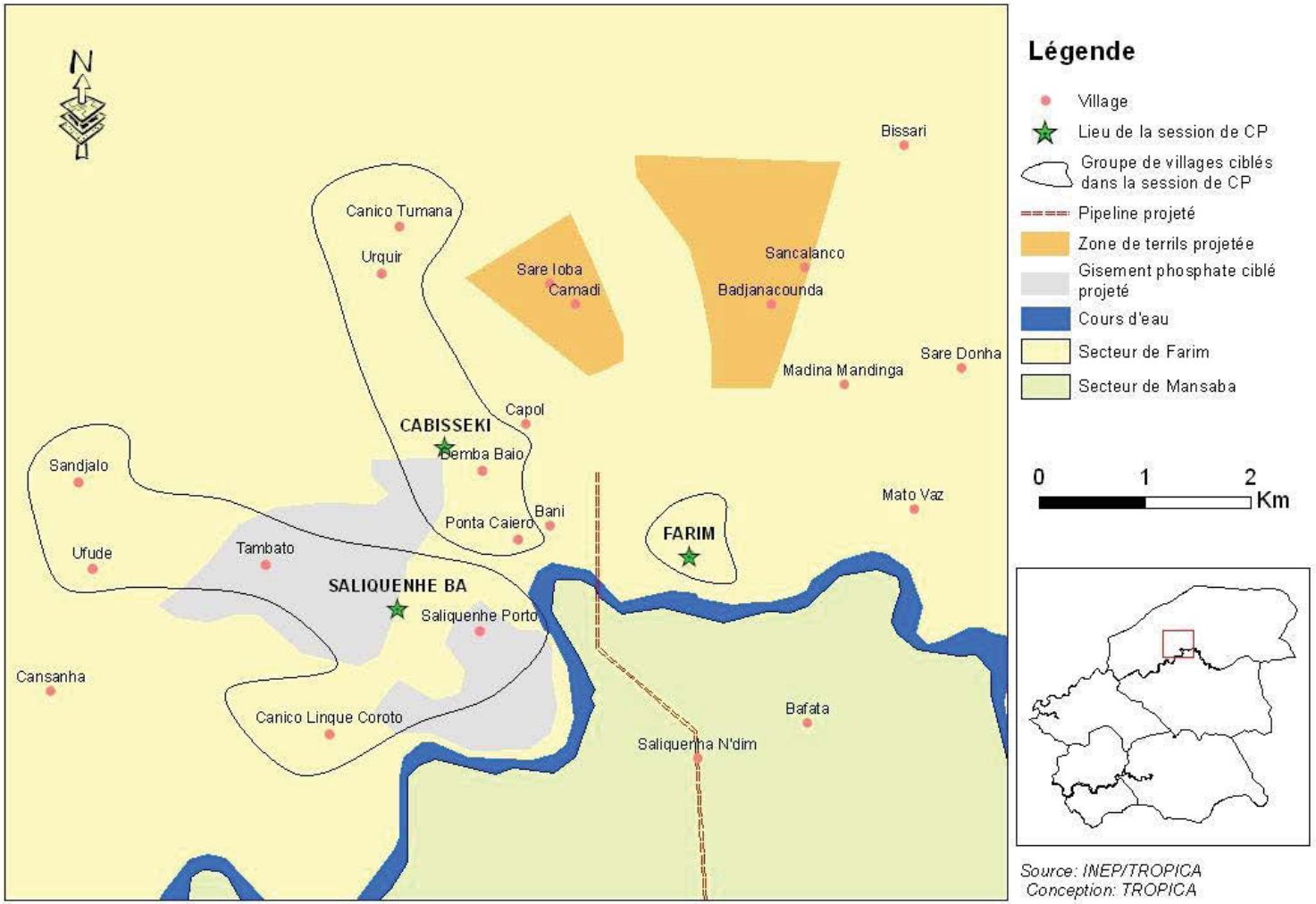

Figure 2: Consultation sessions for the communities in the area along the road to Farim

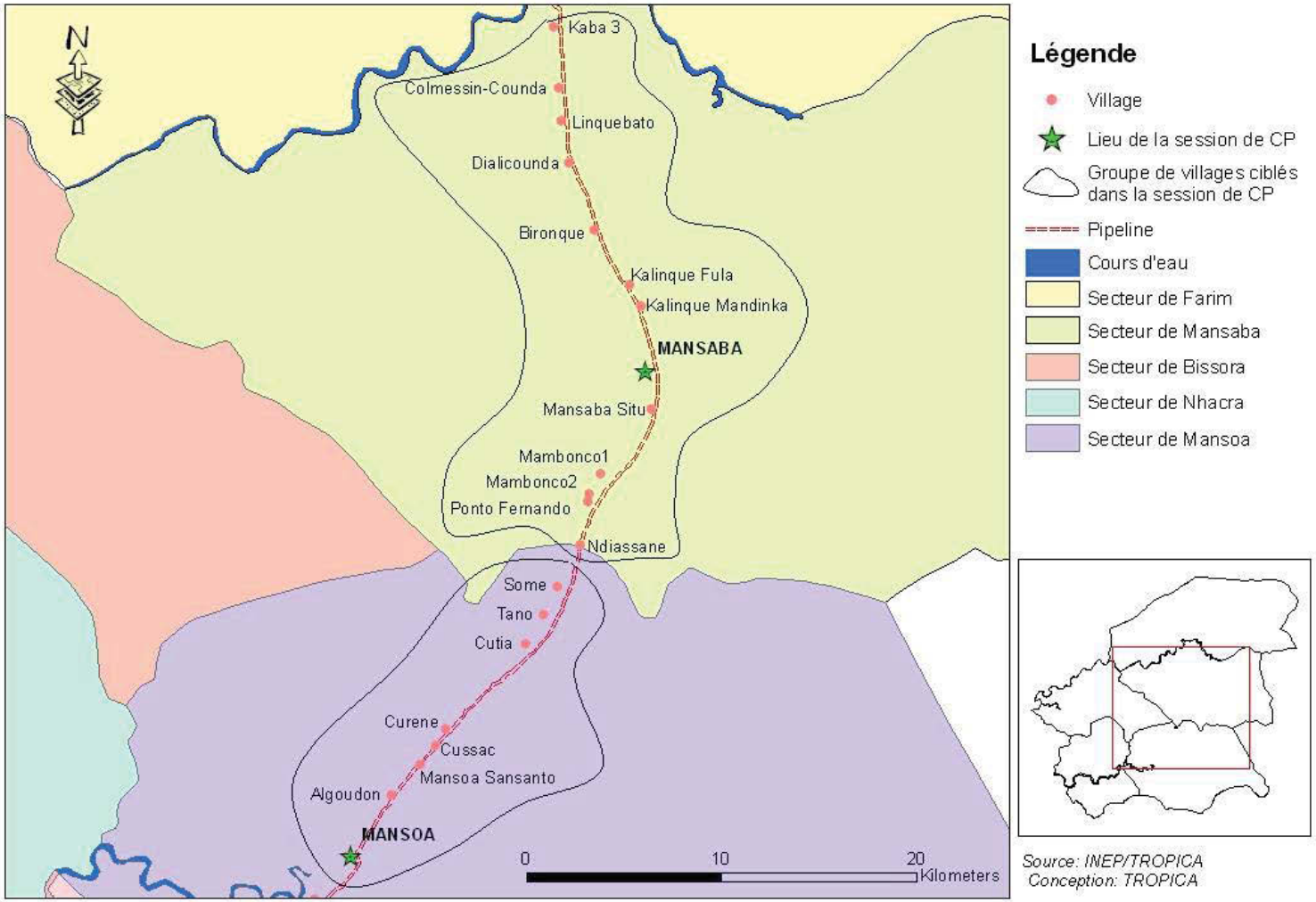

Figure 3: Consultation sessions for the communities in the proposed port area

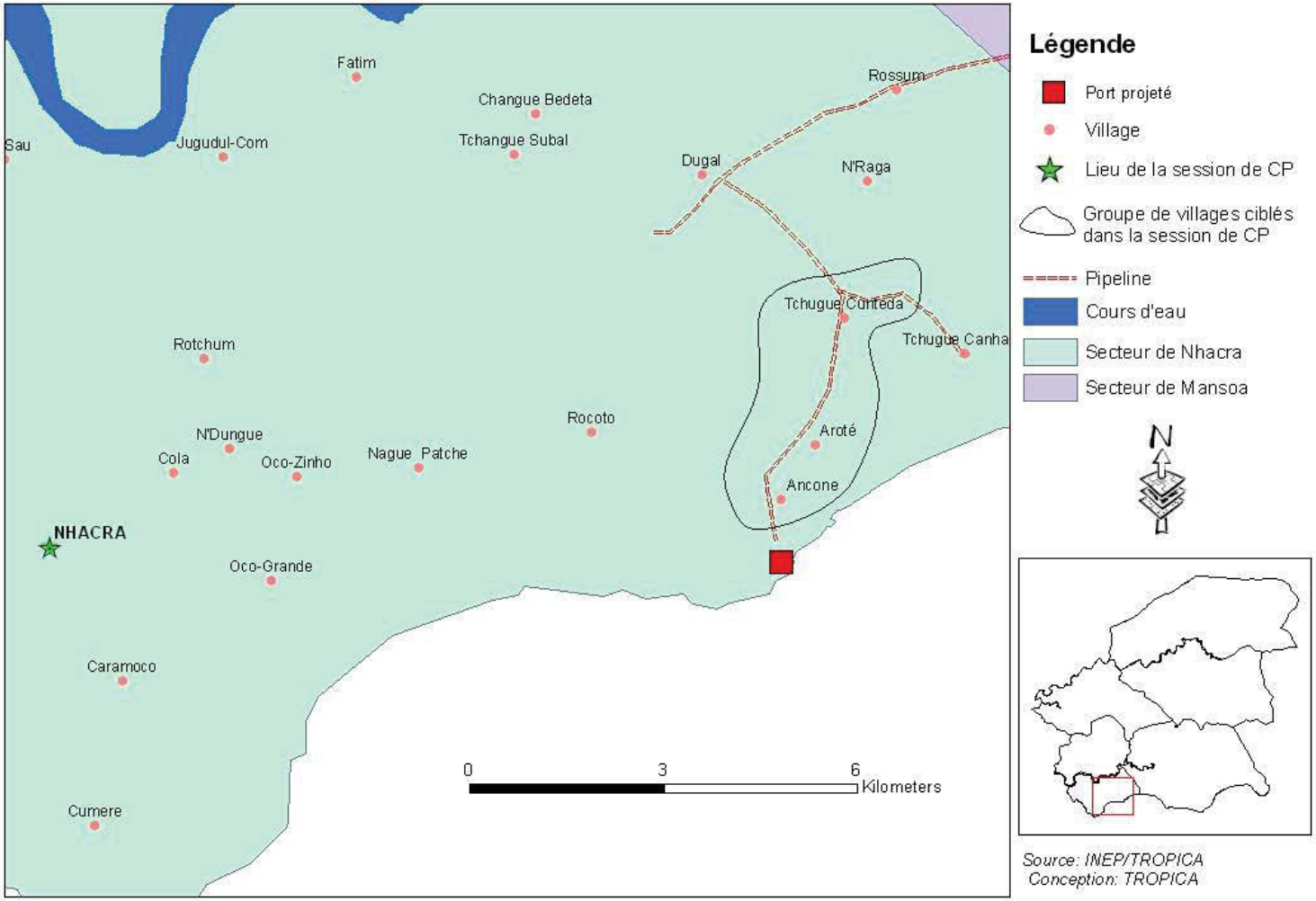

VIII. ISSUES AND CONCERNS RAISED DURING THE CONSULTATION

As stated early many participants expressed their greatest appreciation for the opportunity that was given to them to express their views and concerns on the proposed project.

Attendees raised many issues and concerns, asked questions and in some cases gave guidelines. However, it should be noted that there was some confusion on the ongoing exploration work and the proposed project. Many participants referred to the current drilling activities when making comments. Many women, mentioned the holes produced by drilling activities and demanded clear responses on these.

The relevance of the project has not been questioned during consultation; however, many issues and concerns were raised.

- ☞ **Environmental issues**

The issue of environmental impact of the project was raised many times during consultation. Questions raised were related to pollution, biodiversity and conservation and include mainly the following:

- water pollution (groundwater and surface water;
- landscape degradation,
- disturbance of agricultural lands,
- deforestation,
- destruction of gallery forest,
- disturbance of wildlife, and
- destruction of aquatic life habitat.

- ☞ **Security issues**

Many questions regarding security were asked during consultation. The questions focused on the measures and strategies that the project will use to successfully protect its workers.

The questions and comments on security also relate to the measures of protection the project will use to protect the local population from the consequences of a deliberate act of disruption of destruction of the pipeline.

- ☞ **Socio economy**

The greatest concerns with respect of social and economic impacts pertain to employment opportunities and social infrastructure creation. Some participants stated that the project should benefit local populations through the creation of roads, electric power, schools, hospitals etc.

- **Health**

Comments made on potential impact focused on the influx of migrant workers that may lead to problems, such as HIV/AIDS as well as diseases associated with consumption of water that is polluted due to the project activities. Health impacts associated with dust emission were also raised as a concern.

- **Displacement and resettlement:**

The launching of the Farim phosphate project will imply expropriation of agricultural land and displacement of villages; several questions were asked on how and when the populations will be displaced and where they're will be resettled.

Compensations arrangements

Compensation was a recurrent issue during consultation. Participants stated that populations including agriculturalists and pastoralists will be displaced. In turn, they would like to have clear answers on the consultation package, the modalities of compensation that will be available for them.

- **Employment opportunities:**

Many participants raised the issue of employment and argued that the project should give priority to local residents. Some stated that the project discriminated against them by giving jobs t foreigners.

- **Psychological impacts**

To a less extend some participants expressed fears about the project. That fear may be defined as a fear of change or a fear due to the fascination they got from the images displayed.

IX. CONCLUSION AND RECOMMENDATIONS

Public Consultation for the Farim Phosphate Project was launched through the period of March 5-11th. 2012. Attendance level regarding both the institutions and communities was good.

All attendees recognized and appreciated the relevance of the consultation. Many comments and issues were raised. They include mainly environmental, security and socio economic issues.

To conclude, we would like to humbly make some recommendations to the project. The latter are mainly based on communication and recruitment topics.

- The public should have a say in decisions about actions that could affect their lives. From this perspective, the project will gain to continue its openness for dialogue by organizing regular meetings with different groups of stakeholders to ensure that they are kept informed and updated. Creating these types of forum is crucial in negotiating important issues ranging from population displacement and relocation, land accessibility etc.
- Important information regarding project activities should always be disclosed on time and through the right channels to be sure that the good information reach the right people and on time. This can substantially reduce the volume of ongoing rumors.
- The project should use transparency in its future job recruiting system as it is a highly sensitive subject and
- Use gender inclusive strategies in communicating to ensure that women are not left behind. In the project area, women play a crucial role in productive activities especially farming.

ANNEX 1

ETUDE D'IMPACT ENVIRONNEMENTAL ET SOCIAL

PROJET D'EXPLOITATION DU PHOSHATE DE FARIM

CONSULTATION DU PUBLIC, PHASE DE CADRAGE

PROGRAMME DES SESSIONS DE CONSULTATION

ETAPE 1	
CITIZEN WORKHOPS – FOCUS GROUP	
DATES	**CIBLES**
05/03/2012	☞ **Groupe de Travail** sur le Pétrole et les Industries Extractives dont la composition est la suivante : ✓ IBAP, ✓ IUCN, SWISSAID, ADTINIGUENA, KAFO, ✓ Direction générale des mines et de la géologie, ✓ Direction générale des forets et faune, ✓ Direction générale de l'environnement ; ✓ CAIA ; ✓ PETROGUIN, , ✓ Réseau des parlementaires pour et le développement durable, ✓ Réseau des journalistes écologistes, ✓ Mouvement National de la Société Civile pour la paix, la démocratie et le développement
06 /03/2012 : matin	☞ **Administration Régionale** ✓ Gouvernance ✓ Secteurs (Nhacra, Mansoa, Mansaba, Farim) ✓ Services techniques (niveau région et secteurs)
06/03/2012 : après midi	**Focus group avec les radios qui sont écoutées dans la zone**: ✓ Dialicounda ✓ Radio Nationale ✓ Radio Pindjiguim ✓ Radio Juven ✓ Radio Solmansi ✓ Radio Nossa ✓ Radio Quele le
07/03/2012	**Commission des onze villages de la zone du gisement et chefs de villages** ✓ Président de la Commission ✓ Membres du comité ✓ Chefs de villages

ETAPE 2	
REUNIONS PUBLIQUES	
08/03/2012-matin	**Cabiceque** et villages environnants qui sont : ✓ Uruque ✓ Canico Tu Man na ✓ Demba Baio ✓ Ponta Caiero (Kilakiyala)
08/03/2012-après-midi	**Saliquenhé Ba** et villages environnants qui sont : ✓ Saliquenhe Porto (Ponta Seaca) ✓ Canico Lenque Croto ✓ Tambato ✓ Unfudé ✓ Sandial
09/03/2012-matin	**Farim** ✓ Populations de Farim (10 quartiers)
09/03/2012- après-midi	**Mansaba** et villages environnants: ✓ Ndiassane ✓ Ponta Fernando ✓ Mambanko1 ✓ Mambanko2 ✓ Mansaba Situ ✓ Kalinque Mandiga ✓ Kalinque Fula ✓ Birongue ✓ Dialicounda ✓ Linguebado ✓ Collmessin Cunda ✓ Kaba3
10/03/2012-m	**Mansoa** et villages environnants: ✓ Algoudon ✓ Mansoa sansanto ✓ Cussac ✓ Curene ✓ Cutia ✓ Tano ✓ Som
11/03/2012- après-midi	Zone de **Niakra** ✓ Chugue Anfalé ✓ Chugue Ankon ✓ Zugue Kintedia ✓ Zugué Aroté

Annex 2

GB MINERAIS SA

PROJET D'EXPLOITATION DES PHOSPHATES DE FARIM

ETUDE D'IMPACT ENVIRONMENTAL ET SOCIAL

Première Série de Consultations Publiques

COMMUNIQUE DE PRESSE

Dans le Cadre de l'Etude d'Impact Environnemental et Social du Projet d'Exploitation du Phosphate de FARIM, une consultation du Public sera organisée du Lundi 5 au Dimanche 11 mars 2012. Dans un premier temps, les cinq (05) lieux suivants : **Farim, Cabiséqué, Saliquénié, Mansaba, Mansoa** et **Nhacra**, selon le calendrier ci-dessous.

Mercredi 07 Mars ; 10 heures	Saliquenhe avec la Commission des 11 villages
Jeudi 08 Mars ; 10 heures	Cabiceque
Jeudi 08 Mars ; 16 heures	Saliquenhe avec la population y compris villages riverains
Vendredi 09 Mars ; 10 heures	Farim
Samedi 10 Mars ; 10 heures	Mansaba
Samedi 10 Mars ; 16 heures	Mansoa
Dimanche 11 Mars ; 16 heures	Nhacra

L'objectif de ces rencontres est d'informer les populations des activités en cours et à venir du projet et de recueillir leurs commentaires et suggestions dans le cadre d'une démarche inclusive et participative.

Les populations, particulièrement celles des villages environnants des lieux précités sont invitées à participer à ces rencontres.

Ce communiqué tient lieu de convocation

Pour le responsable des Consultations

Annex 3 : Attendance list

Annex 4 : Comments and Responses

Annex 5

SUMMARY OF COMMUNITY THE CONSULTATION MEETINGS ORGANIZED BY THE PROJECT

MEETING 1

A meeting chaired by the Governor of Oio region was held on December 12, 2011 at Canico Linquecroto.

The following members were in attendance: At the State level: Sana Tchuda Governor of Oio, Quedjau Fofana Administrator of Farim, Ussumane Djassi Secretary of Farim.

GB MINERALS was represented by Martin Aizan.

At the community level the representatives were : Mamadou Cissé, Malam Tambadou, Queba Findaman, Bacar Dabo, Cabiro Queta, Mustafa Queta, Numon Dabo, Uie Turé,(Djalicounda radio) Sadjo Ture, Chérifou Dabo, Sunkuto Baro.

The total number of people who participated to the meeting is 50.0
Topics discussed were cantered on the phosphate project and can be summarized as the following:

- The head of the committee of wise men of Farim, Mr Mamadou stressed on the need of sensitizing and sharing information. He stated that providing right information on time was crucial in avoiding the propagation of rumours. He added that Information regarding the objectives of the Farim phosphate project and its proposed activities should be provided to the local populations on regular basis.

- The Administrator of Farim Mr Quedjau Fofana talked along the same line and added that the organised meeting will be used as a forum to give to the participants an opportunity to express their opinions and views and made requests.

- Sana Tchuda, governor of Oio region stressed the need of support and collaboration between the State, the project and the locals for the phosphate to be successfully exploited.

- Uie Ture from Canico tackled the issues of local people recruitment and the importance of informing people before moving them out.

- Djamba Quéta argued that local population surrounding the project area should be given jobs as it is the case in Senegal

- Kadjali Seidi pointed out the fact that the governor did never meet them before to discuss the project activities. He denounced the negative impacts of the drilling activities on its plantation. Finally the urged the project to hire young people from his village:

- Mandindin Queta talked along the same lines and added his readiness to fully collaborate with the project.

MEETING 2

A meeting was held on December 17, 2011 at Saliquenié.

The following were in attendance: State representatives: Fode Dabo, Regional Secretary; Guedjau Fofana, Administrator of Farim
GB MINERAL representatives: Martin Aizan and Uba Nhaga
Community representatives: Malam Tambadu, Mamadou Cissé, Amidu Ture, Mama Cissé, Malam Sila, Laia Indjai, Ensa Cisse, Braima Ture, Malam Ture, Dano Tambadu, Solo Drame, Lassana Tambadu. The total number of participants reached 60.

Discussion was centered on the following topics:

- Interruption on monthly meetings
- Lack of information from expatriate geologists to the local population
- Recruitment problems for the youth at saliquenié village

Participants 'contributions are summarized in the following lines:

- Ensa Cisse questioned the rationale of the meeting and wanted to know who sent the various representatives to the village.

- Fode Dabo denounced the bad prevailing atmosphere at Saliquénié and the demonstration organized days ago to demand the presence of the minister in charge of the Natural Resources and the Environment.

- Amidu Ture stated that claims from the youth at Saliquenié haven't been satisfied. He said that young people still demand the presence of the minister in charge of Natural Resources and Environment, the director of mining and geology and the director of GB Mineral to obtain accurate information on the project activities.

- Mama Cisse pointed out the impacts of drilling activities on her rice field. He added that production has lowered due to these activities and the bad thing is that she didn't receive any compensation. She added that the drilling well located in her field can cause huge damage in terms of security of the people and the cattle.

- Malam Sila showed his dissatisfaction regarding rates used to compensate damaged trees and used his case as an example, he said he only received 32.500F for 04 damaged cajou trees.

- Quedjau Fofana, took the opportunity to clarify the difference between exploration and exploitation activities. He explained that the ongoing activities fall under the exploration framework. Exploitation depends on the results obtained during the exploration phases. Mr Fofana added that Saliquenie will be definitely displaced and relocated if the exploitation has to happen. He also reminded to the participants that the director of mining and geology has already travelled to the project area to evaluate and monitor the project's work. He finally urged the population especially the youth to have confidence in the local committee and to be more moderate towards the project.

MEETING 3

A third meeting was held on September 28, 2011 at Kamade.

The state officials involved were the following: Quedjau Fofana, Administrator of Farim, Fodé Dabo, Regional secretary. Community representatives were: Mamadou Cissé and Malam Tambadou. GB Minerals were represented by Rigobert Cantussan and Martin Aizan.

The meetings aimed at informing and sensitizing the local population on the proposed project activities.

Contributions are summarized below:

- Malam Tambatou urged population of kamade to substantially collaborate with the project in all aspects. He explained that in the long run, Kamade should be displaced and gave some details on compensation entitlement.
- Rigobert emphasized on the need to create and maintain sincere collaborative relations. He added that GB minerals with the complicity of the State will try its best to secure the living conditions of the local populations. He said that environmental studies and field visits by CAIA team are among activities that are organized to analyse the best ways to preserve local people natural environment.
- Fode Dabo talked along the same lines and gave some details regarding compensation on lost trees. He urged local people to fully collaborate with the project and avoid creating disturbance that can impede the good functioning of the project activities.
- Quedjau Fofana informed the population on the planned activities regarding topographic data collection. He talked about an engine/plane that will be performing the job in the area. To conclude his contribution Mr Fofana y urged the local people to enrol their children in school to give so that they can have a bright future.

The meeting started at 6.00 pm and ended at 8.30 pm

MEETING 4

A meeting was held at Sankalando on the 29 of September 2011. Have attended the meeting Quedjau Fofona, Administrator of Farim; Fodé Dabo, Regional Secretary. Community level was represented by Malam Tambatu, Mamadu Dabo, Malam Turé; Mussa Dabo, Mussuba Cissé, Mai Mandjan, Rosa Turé, Séco Dabo.
GB MINERALs was represented by Martin Aizan and Rigobert Cantussan.
The total number of participants is evaluated at 40 persons.

This meeting was held to discuss two main topics:

- Population displacement
- Topographic data collection

- Malam Tambadou informed the population the phosphate deposit is located nearby their village, for that reason, population may be relocated to a new site where they would live in good conditions. He also urged the population of Sankalando to fully cooperate with the project and the stakeholders that may seek collaboration from them.

- Mr Fofana informed the population of the planned topographic activities and urged them to enrol their children in school to help them get a bright and successful future.

- Mamadu Dabo said that he understood every single topic discussed and added that his village will always comply with rules and direction regarding exploration and exploitation activities.

The meeting was ended at 7.00pm

MEETING 5

A meeting was held on September 29, 2011 at Sara Loba: have attended Quedjau Fofana; Administrator of Farim, Fodé Dabo, and Regional Secretary. Community level was represented by Mamadu Cissé and GB MINERALs represented by Rigobert Cantussan and Martin Aizan.

Topics related to topographic activities and compensation were covered
Mr Dabo explained that for the purpose of data collection a plane will be flying low and added that nobody should panic for this operation.

- Fode Dabo also explained that in the long run, the village will be moved to avoid major negative impacts on people and that affected people will be compensated.

- He said that both the project and the State will play an instrumental role in helping local population better their living conditions, Every damaged good will be compensated. Good include housing and shrubberies. He added that experts from the Ministry of Agriculture will be in charge of fixing compensation rates. These rates will be based on some criteria such as the age of the damaged tree etc.

- Quedjau Fofana in his speech, urged populations to establish good and sincere working relationships will all stakeholders. He emphasized the fact that appropriate measures will be taken to preserve and protect the environment and human health. He urged parents to enrol their children in school for a better future.

- Malam Turé the chief of Sara Loba said that he understood every word that was explained an added that stakeholders mainly State experts, civil servants and phosphate project staff are always welcome at Sara Loba.

APPENDIX 1-G2

PUBLIC CONSULTATION REPORT (GOLDER 2014C)

(213 Pages)

January 2014

FARIM PHOSPHATE PROJECT, GUINEA-BISSAU

PUBLIC CONSULTATION REPORT

Submitted to:
GB Minerals Limited
1660 - 401 West Georgia Street
Vancouver
British Colombia
V6B 5A1
Canada

REPORT

Report **Number** 13514950201.506/B.0

Distribution:

GB Minerals Ltd. - 1 copy (pdf)
Golder Associates (UK) Limited - 1 copy

Golder Associates

Table of Contents

1.0 INTRODUCTION 1

2.0 PREVIOUS PUBLIC CONSULTATION 1

2.1 Scoping Consultation: April 2011 1

2.2 Consultation: March 2012 1

3.0 2013 PUBLIC CONSULTATION MEETINGS 3

3.1 Objective of Public Consultation 3

3.2 Summary of Issues and Concerns 4

3.3 Discussion 5

3.4 Conclusions 6

3.5 Recommendations 7

4.0 REFERENCES 7

TABLES

Table 506.1: Public Consultation 2012 Schedule 1

Table 506.2: Public Consultation 2013 Schedule 3

Table 506.3: Category of comments and questions recorded 6

APPENDICES

APPENDIX A
Comments and Response Report (CRR)

APPENDIX B
March 2011 Posters

APPENDIX C
Field Report December 2013

APPENDIX D
December 2013 Posters

APPENDIX E
Public Consultation Photographs

APPENDIX F
Attendance Register

1.0 INTRODUCTION

The Farim Phosphate Project (the Project) is located in the central northern part of Guinea-Bissau, approximately 25 km south of the Senegal border and approximately 5 km west of the town of Farim. It is 120 km northeast of Bissau, the capital. The Project consists of a high grade sedimentary phosphate deposit which extends over a known surface area of approximately 40 km^2. The life of mining operations is expected to be 25 years.

To date, Golder has been appointed to carry out baseline studies and an international standard environmental and social impact assessment (ESIA) for the proposed mine site only. As part of the ESIA, a process of public consultation has been conducted. Ten public consultation meetings were held in Guinea Bissau in December 2013. The purpose of these meetings was to give local stakeholders an update on the project, and provide the opportunity to ask questions and make comments. The meetings were held from 6 to 11 December 2013 and were attended by representatives from authorities, non-governmental organisations (NGOs) and local communities. Stakeholders welcomed the opportunity to attend meetings about the project and raise their comments and questions.

This report presents the public consultation process, including a summary of the comments and responses. The detailed comments and responses are presented in Appendix A. The consultation process involves numerous rounds of consultation, which are summarised in Section 2.0. The scheduling of consultation reflects changes in the scope of the Project as information became available.

2.0 PREVIOUS PUBLIC CONSULTATION

2.1 Scoping Consultation: April 2011

Golder made an initial visit to Guinea Bissau and the project area in April 2011. High level meetings took place with government departments in Bissau and one meeting took place with village Chiefs in Farim. The primary meeting with the government was with Celula de Avalicao de Impacte Ambiental (CAIA – a department of the Office of the Prime Minister), the lead authority responsible for evaluating the ESIA report. CAIA are the authority that will determine if the ESIA is suitable for the Project and are important to the decision making process.

Discussions with the CAIA and other government departments focussed on legislation, requirements and expectations for the ESIA (Golder, 2011). The meeting with the village Chiefs established that the communities were supportive of the proposed project and that they were keen to continue to receive information. This is best achieved through public consultation.

2.2 Consultation: March 2012

An independent environmental consultancy, based in Senegal, was appointed to undertake public consultation in March 2012. The process and findings of this consultation are presented in a separate report (Tropica, 2012). A total of 424 stakeholders from different sectors of the society attended ten meetings in this round of consultation (Table 506.1). Venues were chosen to be convenient to villages in the vicinity of the project, and invites were given to surrounding villages so that anyone who wanted to join meetings was able to do so.

Table 506.1: Public Consultation 2012 Schedule

Date	Stakeholder Group	Venue	Number of Attendees
5 March	Citizen Workshop	Siege IBAP, Bissau	8
6 March	Government representatives from Farim	Roman Catholic Primary School Compound, Farim	65
6 March	Media	Roman Catholic Primary School Compound, Farim	5

Date	Stakeholder Group	Venue	Number of Attendees
7 March	Representatives from commission of chiefs	Saliquenhé	60
8 March	Public Meetings/surrounding villages(7)	Cabiceque	43
8 March	Public Meetings/surrounding villages(7)	Saliquenhé	60
9 March	Community Meeting	Farim	64
10 March	Community Meeting	Mansaba	51
10 March	Community Meeting	Mansoa	38
11 March	Community Meeting	Nhacra	30
		Total number of attendees	**424**

The meetings followed a set format, starting with general introductions and a presentation of project information by the consultation team, in the form of posters (see Appendix B). The main comments and questions raised included:

- Open cast / surface mining methods are often associated with dust, noise, air pollution and soil erosion. The project should therefore explore underground mining as an option;
- Will communities living close to the proposed mine site be resettled? Will all communities in the project site be resettled?;
- The development of the phosphate mine will definitely cause an influx of people into Farim. Will this have an impact on the spread of HIV / AIDS?;
- The public consultation process for the Project is long overdue;
- Will local community members be considered for employment by the Project?;
- Will there be a workman compensation package for all workers who sustain injuries whilst working for the Project?;
- Reclamation, will open pits be covered after the life of mine?;
- Considering the closeness of the project site to the Farim River, we are wondering if fish in the river will be affected. This will ultimately affect our livelihood and impact negatively on us;
- How will compensation payment be determined for persons affected by the Project?;
- Is there a decommissioning plan for the Project?;
- Exploration activities by the Project is already destroying the environment and thus causing lots of inconvenience in the area (making reference to cutting down of trees, drilling activities, erosion). What is the Project doing to mitigate this?;
- When will community members be informed of the actual commencement date of the Project? This will enable farmers to know where to farm and where not to farm);
- We fear the drilling of wells at the Project site will ultimately affect the water in our communities (there are community apprehensions about shortage of water);
- Project communities must be the first beneficiaries of the Project dividends;
- Many people did not know about the stakeholder consultation meetings in time. Some leaders received the information and kept it to themselves;

- What value is the Project putting on a cashew tree?;
- A separate comment stated that 'whatever values the Project is currently proposing as compensation is inadequate';
- The Project disregards the local population by attracting people from other countries into their operation. Could it possibly be because the Project has no respect for people in Farim?; and
- On 16 November 2011, a proposed meeting between the community and the Project officials scheduled to take place in Saliquenhé never took place. Nobody from the Project team has had the courtesy to apologise to us. This is certainly not the best way to live with the host community.

3.0 2013 PUBLIC CONSULTATION MEETINGS

For the ongoing consultation, meetings were held in December 2013 with the local stakeholders. The schedule of these meetings is presented in Table 506.2, with the field report produced from these meetings presented in Appendix C. The team met the government agencies in Bissau who have responsibility for authorising projects based on the ESIA process, then travelled to the Farim area for meetings with project-affected communities and other stakeholders. The stakeholders welcomed the opportunity to attend meetings about the project and raise their comments and questions.

Table 506.2: Public Consultation 2013 Schedule

Date	Stakeholder Group	Venue	Number of Attendees
6 December	Representative of the Ministry of Geology and Mining	Board Room at Bissau	7
6 December	Representatives from CAIA	CAIA Office at Bissau	11
8 December	Project Workers (Dry Run)	Project Office at Farim	11
9 December	Saliquenhé Community	Seliquenhi	142
10 December	Tambato Community	Tambatu	61
10 December	Sandjal Community	Sandjal	65
10 December	Canico Community	Canico	102
11 December	Representatives from (Canico, Tumana, Orque and Sare-Ioba) surrounding Communities.	Canico Tumane	226
11 December	Ponta Capsec Community	Ponta Capsec	21
11 December	Ponta Zeca Community	Ponta Zeca	23
		Total number of attendees	**669**

The format of the meetings was the same as previous rounds of consultation. Meetings started with general introductions, followed by a presentation of project information in the form of posters (see Appendix D) followed by an opportunity to raise questions and concerns. Photographs of these meetings are presented in Appendix E, with the attendance registers in Appendix F.

3.1 Objective of Public Consultation

The objective of public consultation is to actively obtain contributions to the Project ESIA from a broad spectrum of stakeholders. This is conducted at national, regional, and local levels with particular emphasis on project-affected persons (PAPs). The basic principles of consultation and disclosure were:

- Managing communication between the Project proponent and stakeholders by creating an atmosphere of mutual understanding, respect, trust, and collaboration in meetings;

- Providing adequate, clear, timely and consistent information about the Project and ESIA process with information on how they can participate (including outside of meetings and after the consultation team has left the area);
- Building capacity among stakeholders so they can understand the information and contribute to the process with issues of concern and suggestions for enhanced benefits;
- Providing stakeholders with timely feedback on whether and how their contributions were incorporated into project designs and decisions regarding alternatives, mitigation measures, and strategies for enhancing benefits; and
- Identifying, recording, and responding to grievances and complaints raised by PAPs during the course of the ESIA and throughout the life of the mine.

Active stakeholder involvement generally leads to less adverse impacts and greater benefits for all parties as there is two-way communication taking place.

3.2 Summary of Issues and Concerns

The meetings were interactive, and the following issues were raised and comments made:

- People said they were happy that consultation meetings took place as it provided them an insight into the project and opportunity to be involved. It was commented that there is currently no mechanism for people to complain or provide feedback on the project. For example, communities complained that project vehicles do not provide lifts, even if going in same direction;
- There was an apparent mistrust of the project in the communities. People claimed that in the past promises have been made regarding resettlement and compensation for exploration and mining activities which have not been honoured. It should be noted that no information was provided to the consultation team on who made these promises and what specifically they were;
- People questioned why the government was never represented at the public consultation meetings. There was also suspicion that the project and government were colluding to develop the project without supporting the local communities. Communities requested better collaboration with all partners of the project, including both government and the Project;
- Communities claimed that they had not benefitted from project fees already paid to government (apparently 300 million CFA);
- People asked if the Project will ever commence, as “it has been seven years since communities first heard about the Project”;
- There is concern that fertility of the land will be affected, based on the belief “that phosphate is a fertiliser; mining it means removing the fertiliser from the land”. People are concerned that their main livelihood, agriculture, would be lost;
- The women asked for rice milling and salt processing machines to assist them with farming; this was raised in all communities visited;
- Farmers said that they were not consulted before the Project gained access to their land where crops and trees grow (e.g. mango, cashew trees, rice, and oranges); the activities referred to were drilling and exploration activities;
- The company compensation policy was not clear and compensation rates were not known. According to the communities, some farms had been damaged without any compensation being offered. On the few occasions where compensation was offered (due to damage of cashew trees) payment was given only for mature trees that were damaged. Nothing was received for young trees, and recipients were never advised of compensation rates and requirements;

- Opportunities for training and skill development were requested; this is in anticipation of the start of the Project so that local people are prepared and ready to apply for jobs advertised;
- People asked if local people would be employed in the Project. People did not want foreigners brought in to take up jobs in the Project that could be undertaken by local people, as was claimed for the exploration work;
- The open pit (box cut) has not been covered and has become a health concern. It is believed to breed mosquitoes and is also a safety concern to residents. As a result, it was asked "What is the guarantee that with decommissioning of the Project, the Project will be committed to reclamation and rehabilitation?"
- The communities were concerned that drinking water would be contaminated by mining;
- People said they were worried that they were going to be resettled. Relocation is a concern because residents fear they will not have lands to continue farming activities. People said they will oppose relocation because there would be loss of livelihoods. It was suggested that the project should undertake community development register / opportunities to identify potential community development opportunities in the Project area. The Project will not be committed to anything by this study. It will rather help the Project at a later stage if it wants to undertake some community development programmes. People requested services be provided by the Project (e.g. roads, schools, hospitals, churches, transportation etc.) and that GB Minerals provide irrigation schemes to support continuous farming throughout the year. The communities appear to regard the project as a surrogate government in terms of providing means for development. It was claimed that the government had failed to provide the communities with any substantial infrastructure development. In general, it appears that the communities mistrust the Government; and
- People said they were worried that cultural sites like shrines, cemeteries and grooves (sacred places that people have cultural attachment to, mostly in the forests) would be destroyed by the Project.

The full list of comments and questions is presented in the Comments and Response Report (Appendix A).

3.3 Discussion

The major concerns raised during the public consultation meetings are discussed below.

- Consultation came up as a leading concern for the stakeholders who attended the public consultation meetings. It is important that the project continues to provide adequate, clear, timely and consistent information about the Project and ESIA process, as well as information on how they can participate meaningfully to the Project. In addition, sufficient opportunity should be given to stakeholders to raise issues, make suggestions and voice concerns and expectations of the Project;
- Concerns regarding livelihoods were raised regularly. People were worried that their sources of livelihoods have been and may be affected by the Project;
- Concerns regarding environment and socio-economic issues were raised at the meetings. Stakeholders were concerned that the development of the Project could have potential negative impacts (e.g. influx of people from elsewhere);
- People wondered whether they would have the opportunity to be employed by the Project. The main issue was about availability of jobs for local people in the Project (and foreigners taking jobs); and
- There has been an apparent lack of compensation payments, for farms that may have been affected by the Project. This has a direct impact on socio-economic conditions of the people.

The categories of comments and questions raised at the public consultation meetings are summarised in Table 506.3.

Table 506.3: Category of comments and questions recorded

Category	Number of Comments	Percentage
Project (Appendix A; Table A.1)	9	5.0
Community development (Appendix A, Table A.2)	8	4.3
Employment and skills (Appendix A, Table A.3)	12	6.4
Project benefit (Appendix A, Table A.4)	9	45.0
Livelihoods (Appendix A, Table A.5)	23	12.4
General (Appendix A, Table A.6)	13	7.0
Social amenities (Appendix A, Table A.7)	11	6.0
Government (Appendix A, Table A.8)	11	6.0
Public consultation (Appendix A, Table A.9)	35	19.0
Resettlement (Appendix A, Table A.10)	9	5.0
Compensation (Appendix A, Table A.11)	11	6.0
Environment (Appendix A, Table A.12)	17	9.1
Socio-economic (Appendix A, Table A.13)	17	9.1
Total	**209**	**100.0**

3.4 Conclusions

Based on the comments and observations received during the consultation meetings, the following conclusions are made:

- People have goodwill towards the Project. It is important to maintain this goodwill which will be best achieved by keeping stakeholders engaged through meetings;
- There appeared to be a general feeling that communities are being neglected by both the government and the Project. In many cases the communities do not trust that the Project or the Government are willing to provide support to local communities;
- The communities wanted the Project to identify and assist potential community development opportunities.
- The stakeholders were happy with the meetings as there had previously been a general feeling of exclusion from the Project. They would also like to see actions to support the messages given out by the Project, given the past promises made on behalf of the company; and
- The stakeholder engagement process conducted by GB Minerals should continue throughout the development of the Project. The Public Consultation process (for the ESIA) provides a mechanism for disseminating information and supporting the stakeholder engagement process. Both processes enable clear and consistent messages to reach stakeholders. In the absence of information, misinformation tends to circulate, which focuses on the negative impacts. Misinformation can also raise unrealistic expectations amongst stakeholders.

The public consultation process was based on free, prior and adequate project information being shared with community members.

3.5 Recommendations

Based on the comments/issues, questions and suggestions recorded from the public consultations, the following recommendations are made:

- Another round of consultation should take place when the ESIA report is compiled. This will allow the Project to demonstrate how the community concerns have been addressed through the ESIA process. Continuing the engagement process within the ESIA studies, will enable clear consistent messages to reach stakeholders;
- A register of potential community development opportunities should be developed. This will aid the Project at a later stage if it decides to provide any community development programmes. This does not commit the company to these projects, but provides a means of tracking opportunities and justifying selection of projects (or otherwise) at a future date;
- In-house training should be organised for project officers at Farim. These project officers have day to day interaction with communities and they need to give accurate information that is consistent. It is recommended that they are given training in handling questions and giving information (even if it is to refer communities to the stakeholder engagement officer);
- GB Minerals has appointed a single representative who is responsible for providing information to the communities. This is a positive step to avoid confusion amongst the communities and enable accurate dissemination of information. To support this role, the Project information should be concise and clear, so that it is easy to explain so the communities are able to understand the Project; and
- Community notice boards should be mounted in villages to display project information; a locked box should be made available at the same sites so that people can send letters to GB Minerals.

4.0 REFERENCES

- Golder Associates (UK) Ltd., 2011. Environmnetal Gap Analysis – Farim Phosphate Project, Guinea-Bissau. (Report No. 11514950043.500/B.0.)
- Tropica, 2012, Public Consultation Report (submitted April 2012)

Report Signature Page

GOLDER ASSOCIATES (UK) LTD

Opare-Addoh Okyere
Stakeholder Engagement Specialist

Marion Thomas
Associate: Environmental and Social Lead in West Africa

Date: 23 January 2014

OO/MT/CN/DAK/ngc

APPENDIX A

Comments and Response Report (CRR)

APPENDIX A
Comments and Response Report (CRR)

This Comment and Response Report (CRR) will feed into the Environmental and Social Impact Assessment (ESIA) for the Project and presents the stakeholder comments recorded at public meetings held between 6 and 11 December 2013.

The comments have been categorised as follows and responded to by members of the ESIA team and the GB Minerals (tables A.1 to A.13):

- Project;
- Community development;
- Employment and skills;
- Project benefits;
- Livelihoods;
- General;
- Social amenities;
- Government;
- Public consultation;
- Resettlement;
- Compensation;
- Environment; and
- Socio-economic.

Stakeholder comments have been included in a table and categorised. The table records the comments, the person who raised the comments, the date of the meeting, venue, and the response to the comment.

Table A.1: Project

Comments, issues, and suggestions	Stakeholder	Date	Venue	Response
Different group of people come to work in the community and we do not get to hear from them again.(Dissemination of project information).	Une Seidi-Student	10 December 2013	Stakeholder Consultation Meeting at Sandjal	At every stage of the ESIA process teams of people have to carry out studies so a lot of people will have been seen. There was also the drilling and exploration activity which is all part of preparation for opening a mine. The reports that are produced will be made available to stakeholders when the ESIA report is drafted.

You are always in our community collecting information and yet nothing seems to be happening.				The life cycle of a mine can be long. Collecting information and carrying out studies can take many years.
The exploration phase of the project must be accompanied with social intervention programs.	Malam Tangado (Representative from NGO Mining Commission)	9 December 2013	Stakeholder Consultation Meeting at Saliquenhni	
The project should be undertaken according to international standards.				The project is being undertaken to meet international standards (the Equator Principles, IFC) are being applied to this project. This is the first mining project to be developed in the country.
If the mining of minerals turns out to be a bane instead of a blessing then we suggest that it should not be mined.	Saliquenhni Chief			
The project has taken seven years to get started. Why?	Injia Camara-Farmer Lamine Toure-Student Abdullai Toure-Salt Producer			
You always claim production has not started and yet we are feeling the impacts already.	Abu Sisse-Imam	10 December 2013	Stakeholder Consultation Meeting at Sandjal	

Table A.2: Community Development

Comments, issues, and suggestions	Stakeholder	Date	Source	Response
We request the project undertake irrigation schemes for our communities. This will compensate for lost livelihood.	Binta Queita-Farmer	9 December 2013	Stakeholder Consultation Meeting at Saliquenhi	The provision of social services is the function of government. The project during the production phase will be expected to pay taxes and royalties to government and it is expected that these monies will be used to provide the social services that you asking for.
We request that the project provide us with a market. This will enable us sell our farm produce.	Ibrahim Keita	10 December 2013	Stakeholder Consultation Meeting at Canico	
We request that the project provide us with a rice milling machine.				
Farmers need mechanization of agriculture. (Example rice cultivation).	Mussa Mancal-Farmer	10 December 2013	Stakeholder Consultation Meeting at Sandjal	
We will be happy if the project will bring community development initiatives.				
Community members will be happy if the project could assist us irrigation schemes. This will enable us continue our rice faring all year round.				
Our community needs borehole water system.	Estabo Camara-Student	10 December 2013	Stakeholder Consultation Meeting at Sandjal	
If the project supports community development initiatives, it could get many people employed and thereby minimising the demand for employment from the project.	Mariama Sani-Farmer	11 December 2013	Stakeholder Consultation Meeting at Canico Tu Man Na	

Table A.3: Employment and Skills

Comments, issues, and suggestions	Stakeholder	Date	Source	Response
Will there be training for local people to build their capacity for the phosphate project?	Kauso Keita-Farmer Lamine Ture-Student Amadu Toure-Trader	9 December 2013	Stakeholder Consultation Meeting at Saliquenhi	
For every available position in search for jobs we are required to take an aptitude test. (Stresses on the importance of skill development and training).	Kauso Keita-Farmer	9 December 2013	Stakeholder Consultation Meeting at Saliquenhi	
People from outside the country must not be brought in to take up job that community people have the skills and competence to do.	Lamine Ture-Student	9 December 2013	Stakeholder Consultation Meeting at Saliquenhi	The project requires a specialised skill, competence and experience therefore people with these competences would have to be brought from anywhere including Guinea Bissau to take up jobs during the constructional phase. This will offer the opportunity to train locals on the job.
We want the government to enforce a legislation that will prevent foreign citizens from taking up jobs with the project.				
Why are local people not employed with GB Minerals?	Amadu Toure-Trader	9 December 2013	Stakeholder Consultation Meeting at Saliquenhi	The company will employ local people where possible. Where there is a lack of skills and experience, the company will then have to look outside for the required skills. Some local people have already been employed. Example Armando Conte and the entire project officers at Farim are all locals.

Comments, issues, and suggestions	Stakeholder	Date	Source	Response
Young people could be selected and sent abroad to acquire specialised skills on the machines.				GB Minerals will look at options for hiring skilled workers but may need foreigners with specialised skills and competences to be brought in and train local if possible.
We suggest that each household be made to select one person to work with the project. This will ensure fairness.	Mussa Mancal-Farmer	9 December 2013	Stakeholder Consultation Meeting at Sandjal	
There should be equal opportunity for community members to be employed by the project.	Mallam Sisse-Farmer	10 December 2013	Stakeholder Consultation Meeting at Tambato	The company will employ local people where possible. Where there is a lack of skills and experience, the company will then have to look outside for the required skills.
If the project decides to employ local people there will be no problem.	Lamine Dabo-Farmer	11 December 2013	Stakeholder Consultation Meeting at Canico Tu Man Na	
Will community people living outside Guinea Bissau with the requisite skills (such as carpentry, electrician) be invited to join the project? The Project should benefit Guinea Bissau nationals.	Braima Cisse- Tailor	9 December 2013	Stakeholder Consultation Meeting at Saliquenhni	If skilled labour is not available in the local area, then the project will. Apart from unskilled labour only people with the requisite skill appropriate to the project will be employed.

Table A.4: Project Benefits

Comments, issues, and suggestions	Stakeholder	Date	Source	Response
Community people must benefit from the project.	Lamine Toure-Student	9 December 2013	Stakeholder Consultation Meeting at Saliquenhi	
Benefit sharing agreement reached previously must be reviewed to reflect greater benefit for the communities.	Malam Tangado (Representative from NGO Mining Commission)	9 December 2013	Stakeholder Consultation Meeting at Saliquenhi	
Project benefit must be given directly to the project impacted communities instead of paying the money to government.	Comment made by stakeholders	9 December 2013	Stakeholder Consultation Meeting at Saliquenhi	The project is obliged to pay taxes and fees to the government to comply with legislation.
There is the general apprehension that benefit due to the communities will not be received.	Saliquenhi Chief	9 December 2013	Stakeholder Consultation Meeting at Saliquenhi	
We pray that the project brings benefit to our community.	Mussa Mancal-Farmer	10 December 2013	Stakeholder Consultation Meeting at Sandjal	
What is the potential benefit of the phosphate project to our communities?	Lamado Ture-Farmer	10 December 2013	Stakeholder Consultation Meeting at Tambato	
We are optimistic that our coming (referring to stakeholder consultation team) will bring good things in our community. (Looking at project benefit).	Sona Dabo-Farmer	10 December 2013	Stakeholder Consultation Meeting at Tambato	
During the raining season we are not able to travel out because a stream in our locality over flows it banks. We therefore require that a bridge be constructed.	Fernando Nhaga-Farmer	11 December 2013	Stakeholder Consultation Meeting at Ponta Capsec	The provision of social services is the function of government. The project during the production phase will be expected to pay taxes and royalties to government and it is expected that these monies will be used to provide the social services.

Table A.5: Livelihoods

Comments, issues, and suggestions	Stakeholder	Date	Source	Response
We request that the project supports women in the rice field .This will help them increase production.	Braima Cisse- Tailor	9 December 2013	Stakeholder Consultation Meeting at Saliquenhi	The ESIA studies that have taken place have looked at livelihoods and the potential impacts are being addressed.
Our livelihoods have been destroyed as a result of the project exploration activities. What is the project going to do to restore this?	Abdullai Toure-Salt Producer Binta Queita-Farmer	9 December 2013	Stakeholder Consultation Meeting at Saliquenhi	
Salt deposits in our farm lands farms are destroying our rice farms. Can the project come and assist us.	Binta Queita-Farmer	9 December 2013	Stakeholder Consultation Meeting at Saliquenhi	
Since the project has destroyed our livelihood, we demand that the project compensate us with alternative livelihood (fish ponds).	Abubakar Jamba Keita-	9 December 2013	Stakeholder Consultation Meeting at Canico	
As part of the community development initiatives by the project, we will want our rice fields to be desalinated (salty water does not support rice cultivation).	Fatimata Baru-Farmer	10 December 2013	Stakeholder Consultation Meeting at Canico	
We fear our livelihoods are going to be destroyed with the start of the project.	Une Seido-Student	10 December 2013	Stakeholder Consultation Meeting at Sandjal	
The projects drills exploration holes have disturbed ground for about 100 meters radius. Nothing can be grown in this area.	Abu Sisse-Imam	10 December 2013	Stakeholder Consultation Meeting at Sandjal	
If we have irrigation we could produce rice throughout the year putting ourselves into a good stead (collateral) to take loans from the banks and expand our farm.	Cosa Keita-Farmer	10 December 2013	Stakeholder Consultation Meeting at Tambato	
Can the project support us with fertilisers in our farms?				
We do not want to depend on the project for everything. We just ask to be supported to be self-reliant.				Noted.

Comments, issues, and suggestions	Stakeholder	Date	Source	Response
The Project must assist the women in our communities in livelihood restoration.	Injia Camara-Farmer	9 December 2013	Stakeholder Consultation Meeting at Saliquenhi	
Salt deposits in our farm lands are destroying our rice farms. Can the project come and assist us?	Binta Queita-Farmer	9 December 2013	Stakeholder Consultation Meeting at Saliquenhi	
Anytime we lose a livelihood as a result of the actions of the project our socio-economic living standards is lowered.	Falumata Baro-Salt Producer	10 December 2013	Stakeholder Consultation Meeting at Canico	
With the coming of the phosphate project, we have lost many cashew trees thereby contributing to lower income and affecting socio-economic living conditions.	Abubakar Jamba Keita-Farmer	10 December 2013	Stakeholder Consultation Meeting at Canico	The ESIA studies that have taken place have looked at livelihoods and the potential impacts are being addressed.
We fear with the start of the project our livelihoods are going to be destroyed	Malam Tangado (Representative from NGO Mining Commission)	9 December 2013	Stakeholder Consultation Meeting at Saliquehn	
Since our main livelihood agriculture is being destroyed by the project, we are forced to resort to cutting down trees to burn charcoal.	Mama Dabo-Farmer	10 December 2013	Stakeholder Consultation Meeting at Tambato	
Our farms were cleared without prior consultation of affected persons.	Lasana Tambutu-Farmer Jamba Keita-Farmer	9 December 2013 10 December 2013	Stakeholder Consultation Meeting at Saliquenhi Stakeholder Consultation Meeting at Canico	
Since the project began exploration activity, are crops are not yielding the same quantities as previously before the phosphate exploration started.	Banba Sisse-Farmer	10 December 2013	Stakeholder Consultation Meeting at Tambato	
Our livestock walk to neighbouring communities in search of drinking water and in the process they get stolen.	Sandje Mane-Farmer Amina camara	10 December 2013	Stakeholder Consultation Meeting at Sandjal	
Will our livestock be protected by the project?	Abdullai Songo-Student	10 December 2013	Stakeholder Consultation Meeting at Sandjal	The mine will be fenced, as required.

Table A.6: General

Comments, issues, and suggestions	Stakeholder	Date	Source	Response
The Mining Commission (NGO) sent representatives of project impacted communities to Senegal to show the community members a similar project	Malam Tangado (Representative from NGO Mining Commission)	9 December 2013	Stakeholder Consultation Meeting at Saliquenhi	
We have been promised many things in the past by the project which never materialised.	Injia Camara-Farmer	9 December 2013	Stakeholder Consultation Meeting at Saliquenhi	
The Project must assist the women in our communities in livelihood restoration				
We know the start of the project is going to impact negatively on us but unfortunately we have no one to protect our interest.	Braima Cisse- Tailor	9 December 2013	Stakeholder Consultation Meeting at Saliquenhi	One of the many reasons to carry out ESIA studies is to work out what impacts there could be. The ESIA and consultation process is the way to help protect the interests of all parties involved.
The box cut has collected water and as a result, mosquitoes are breeding. This has become a health concern.	Lamine Toure-Student Abu Sisse-Imam	9 December 2013 10 December 2013	Stakeholder Consultation Meeting at Saliquenhi Stakeholder Consultation Meeting at Sandjal	
We are angry people because our interest is not represented in the project.	Abdullai Toure-Salt Producer	9 December 2013	Stakeholder Consultation Meeting at Saliquenhi	The purpose of public consultation is to (a) present the current information about the project to stakeholders (directly or indirectly concerned about the project) and (b) record their issues and concerns and feedback to the project management. The consultation meetings are the place to raise issues about the project. You are also welcome to send comments after the meetings are finished – details are provided on the BID.

We are apprehensive about the project.				The purpose of the meetings is also to share information and concerns. It is our job to make sure all your comments and questions are addressed.
We appreciate the efforts by all to get the project started again.	Kauso Keita	9 December 2013	Stakeholder Consultation Meeting at Saliquenhi	Thanks for the comment. The ESIA team would also like to thank you for attending the meetings and contributing to discussions.
All people regardless of religious belief should be respected.	Abdullai Songo-Student	10 December 2013	Stakeholder Consultation Meeting at Sandjal	Agreed and thanks for the comment.
The community and the project must co-exist peacefully	Abdullai Songo-Student	10 December 2013	Stakeholder Consultation Meeting at Sandjal	
We fear there could be associated diseases in our community when phosphate project starts.	Abudo Sani-Farmer	11 December 2013	Stakeholder Consultation Meeting at Canico Tu Man Na	
There is the concern that fertility of the land has been affected. The reason is that phosphate is a fertilizer; mining it means removing the fertilizer from the ground. People are concerned that their main livelihoods, agriculture, would be lost	Abdullai Songo-Farmer	11 December 2013	Stakeholder Consultation Meeting at Canico Tu Man Na	Production of phosphate has not started so it cannot be that the reduction of the fertility of your farm lands could be attributed to the project. We will urge you all to be patient for the ESIA findings.
Will local farmers benefit from the fertilizer when it is finally produced?	Amadu Embalo-Farmer	11 December 2013	Stakeholder Consultation Meeting at Canico Tu Man Na	

Table A.7: Social Amenities

Comments, issues, and suggestions	Stakeholder	Date	Source	Response
We will want the project to provide us with schools and electricity in our community	Braima Cisse- Tailor Ibrahim Keita Bakara Dabo-Town Mayor for Canico	9 December 2013 10 December 2013	Stakeholder Consultation Meeting at Saliquenhi Stakeholder Consultation Meeting at Canico	The provision of social services is the function of government. The project during the production phase will be expected to pay taxes and royalties to government ant it is expected that these monies will be used to provide the social services
Will the project provide us with Islamic schools?	Ode Toure-Farmer	10 December 2013	Stakeholder Consultation Meeting at Canico	
The communities regard the project as a surrogate government in terms for providing means for development. The government has failed to provide infrastructural development for the people	Mussa Mancal-Farmer	10 December 2013	Stakeholder Consultation Meeting at Sandjal	
We will be glad if the project would provide us with a hospital in our community.				
We will be glad if the project can offer us a transmission station for mobile telecommunication.	Estabo Camara-Student Amina Camara-	10 December 2013	Stakeholder Consultation Meeting at Sandjal	
We will be glad if the project is able to build us a mosque.	Queba Dabo-Farmer	10 December 2013	Stakeholder Consultation Meeting at Tambato	
Can the project build us a recreational centre?				
Will the project purchase the rice we cultivate locally?	Aue Keita-Farmer	11 December 2013	Stakeholder Consultation Meeting at Canico Tu Man Na	Thanks for the suggestions

Table A.8: Government

Comments, issues and Suggestions	Stakeholder	Date	Source	Response
We are not happy that no government official was represented in this meeting. This is an important meeting they could not afford to be left out.	Malam Tangado (Representative from NGO Mining Commission)	9 December 2013 10 December 2013	Stakeholder Consultation Meeting at Saliquenhi Stakeholder Consultation Meeting at Canico	Invites were extended to the authorities.
It would have been useful if the government could have provided funding for relevant government agencies to attend this meeting.		9 December 2013	Stakeholder Consultation Meeting at Saliquenhi	
Communities want opportunities to be closer to local government officials.	community concern	9 December 2013	Stakeholder Consultation Meeting at Saliquenhi	
People do not know whether some of the investment funding is intended for benefiting the communities near by the project development.	Abdullai Toure-Salt Producer			
Communities want to have a better collaboration with government and the project.	Abdullai Toure-Salt Producer Lasana Tambutu-Farmer	9 December 2013	Stakeholder Consultation Meeting at Saliquenhi	
We are unaware of the functions of government.	community concern	10 December 2013	Stakeholder Consultation Meeting at Canico	
People feel there should be more upfront consultation including with marginalised people before decisions are implemented, and that the views of citizens should be taken into consideration in decision-making.	Jamba Keita-Farmer	10 December 2013	Stakeholder Consultation Meeting at Canico	
People lack information on how government deals with funding from investments projects, and whether this funding is spent wisely to the benefit of the country and its people.	community concern	11 December 2013	Stakeholder Consultation Meeting at Canico Tu Man Na	

Table A.9: Public Consultation

Comments, issues, and suggestions	Stakeholder	Date	Source	Response
We are pleased that the stakeholder consultation team invited a witness NGO (Mining Commission).	Malam Tangado (Representative from NGO Mining Commission)	9 December 2013 10 December 2013	Stakeholder Consultation Meeting at Saliquenhi Stakeholder Consultation Meeting at Canico	Public consultation and disclosure is open to all stakeholders (those directly and indirectly affected)
People feel there should be more upfront consultation including with marginalized people, before decisions are implemented, and that citizens should be taken into consideration in decision making	Jamba Keita-Farmer Amadu Embalo-Farmer	10 December 2013	Stakeholder Consultation Meeting at Canico	
The project should disclose to us the latest development in terms of time lines of the project	MalamTangado (Representative from NGO Mining Commission)	9 December 2013 10 December 2013	Stakeholder Consultation Meeting at Saliquenhi Stakeholder Consultation Meeting at Tambato	Before the start of the project, a baseline study as part of the ESIA study is undertaken to determine any potential impact on environment and social conditions on the project site. All potential impact identified will have a corresponding mitigation measure to address them. The methods to manage potential impacts will be included in the final ESIA report which will be available to the public.
We appreciate the fact that the stakeholder consultation team came to consult us.	Malam Tangado (Representative from NGO Mining Commission Lasana Tambatu-Farmer Binta Sisse-Farmer Suncan Indjai	9 December 2013 10 December 2013	Stakeholder Consultation Meeting at Saliquenhi Stakeholder Consultation Meeting at Tambato	Thank you for your comment.
Will the findings of Tropica (conducted first round of public consultation) correspond with the present stakeholder consultation?	Malam Tangado (Representative from NGO Mining Commission Caram Injai-Farmer	9 December 2013	Stakeholder Consultation Meeting at Saliquenhi	Public consultation is a process and not an event. This second round of consultation is to provide additional information to community members about the project.

Comments, issues, and suggestions	Stakeholder	Date	Source	Response
Has the government agencies directly involved in the project been consulted already?	Malam Tangado (Representative from NGO Mining Commission			Yes. The various relevant government department and agencies with over sight responsibilities such as the ministry of geology and mining, CAIA, the local Governor at Farim have all been consulted.
The public consultation presentation has built our capacity to be able to participate meaningfully in the project.	Lamine Cisse-Tailor	9 December 2013	Stakeholder Consultation Meeting at Saliquenhi	
The project should arrange a meeting with the commission for mining(NGO)	Abdullai Toure- Salt Producer			
During the first round of public consultation meeting we did not have the opportunity to ask questions.	Abdullai Toure- Salt Producer			Opportunity was provided for people to ask questions during the first round of public consultation. You however have another chance to make a contribution to the project
We are not involved in the decision making process of the project.	Abubakar Jambo Keita-Farmer	10 December 2013	Stakeholder Consultation Meeting at Canico	
We use to live in total darkness until your arrival.(making reference to the importance of stakeholder consultation)	Mussa Mancal-Farmer Lamine Dabo-Farmer	10 December 2013 11 December 2013	Stakeholder Consultation Meeting at Canico Stakeholder Consultation Meeting at Canico Tu Man Na	Public consultation is a process and not an event. At any moment when there is any significant additional information we will come and talk to you about it. At every stage of the ESIA phase there will be public consultation. The ESIA document will be made public for all to make comments.
We are happy that consultation meetings took place as it provided them an insight into the project and opportunity to be involved.	Mussa Mancal-Farmer	10 December 2013	Stakeholder Consultation Meeting at Sandjal	
Encourages all present at the meeting to ask questions because probably this opportunity might never come again.	Abdullai Songo-Student	10 December 2013	Stakeholder Consultation Meeting at Sandjal	
Different group of people come to work in the community and we do not get to hear from them again.(Dissemination of project information)	Une Seidi-Student			

Comments, issues, and suggestions	Stakeholder	Date	Source	Response
Project information should be consistent with what has been said in the past.	Une Seidi-Student			
Why have you come to consult us again?	Causo Queita-Farmer	11 December 2013		
We are happy that an independent consultant is involved with ESIA studies and stakeholder consultation. We are assured that our interest will be protected and guaranteed.	Amadu Embalo-Farmer			
We are happy that our comments and concerned are being recorded.	Mamadu Ture-Farmer			
Stakeholder consultation can resolve a lot of misconception about the project.	Mamadu Ture-Farmer			
We sacrificed our time and energy to attend your meetings and yet we have not been given food or water.	Aua Keita-Farmer		Stakeholder Consultation Meeting at Canico Tu Man Na	
The project should invite all citizens living in different countries to come and participate (Work) with the project.	Braima Cisse- Tailor	9 December 2013	Stakeholder Consultation Meeting at Saliquenhi	
The project must consult community members to identify sacred places and also to perform the necessary customary and pacification rites before the project gets started.	Mamadu Ture-Farmer	11 December 2013	Stakeholder Consultation Meeting at Canico Tu Man Na	As part of the ESIA studies cultural and archaeological studies will be conducted to determine the availability of cultural sites and find appropriate mitigating measures to deal with them
For the support we have for the project, we offered land to be used to store project materials. In return we got nothing.	Lamine Dabo-Farmer	11 December 2013	Stakeholder Consultation Meeting at Canico Tu Man Na	
The ESIA document should be distributed to all parties, community, CAIA, relevant government departments and agencies	Banba Sisse-Farmer	10 December 2013	Stakeholder Consultation Meeting at Tambato	
Project does not have respect for community people?	Mahamadu Seidu-Student		Stakeholder Consultation Meeting at Canico	

Comments, issues, and suggestions	Stakeholder	Date	Source	Response
Sometimes when we have met the project officers for meetings, the project turns round to twist the purpose of the meeting to mean communities have been given some community development project.	Abdullai Toure-Salt Producer	9 December 2013	Stakeholder Consultation Meeting at Saliquenhi	
Why are GB Minerals top brass not represented in this meeting? Do they not attach any importance to this program?	Amadu Toure-Trader			For greater transparency and in fulfilment of international best practice, an independent consultant has been appointed by the project to undertake the ESIA of which the public consultation is part. Armando Conte is representing the company at this meeting. All reports and comments will be sent to the client; they will also contribute to responses made to all questions and comments made during the consultation meetings.
We anticipate that our concerns do not get into the project.	Lassana Tanbado-Farmer	9 December 2013	Stakeholder Consultation Meeting at Saliquenhi	All concerns raised in the meetings are recorded and responded to. All specialists working on the project also receive the comments and questions raised by stakeholders so that they address these, as necessary.

Comments, issues, and suggestions	Stakeholder	Date	Source	Response
There should be transparency in all the dealings of the project.	Saliquenhi Chief			For greater transparency and in fulfilment of international best practice an independent consultant has been appointed by the project to undertake the ESIA. Secondly, the purpose of public consultation is to present the current information about the project to the different stakeholder directly or indirectly concerned about the project and subsequently record their issues and concerns back to the project.

Table A.10: Resettlement

Comments, issues, and suggestions	Stakeholder	Date	Source	Response
Are communities around the project area going to be resettled?	Malam Tangado (Representative from NGO Mining Commission	9 December 2013	Stakeholder Consultation Meeting at Saliquenhni	The ESIA studies will come out with findings whether or not resettlement will be needed.
We were first told of resettlement since 2009 but nothing has been heard again since that time.	Injia Caram-Farmer Lamine Toure-Student			
Will we be resettled or not?	Amadu Toure-Trader Jamba Keita	9 December 2013 10 December 2013	Stakeholder Consultation Meeting at Saliquenhni Stakeholder Consultation Meeting at Canico	
Will there be available lands for us to continue our farming activities?	Malam Tangado (Representative from NGO Mining Commission	9 December 2013	Stakeholder Consultation Meeting at Saliquenhni	
All negotiations on resettlement should include project impacted persons.				
Resettlements will disturb the social structure in the society. This will be difficult for us to cope with.	Bakara Dabo-Town Mayor for Canico	10 December 2013	Stakeholder Consultation Meeting at Canico	
The idea of resettlement worries us.	Banba Sisse-Farmer		Stakeholder Consultation Meeting at Tambato	

Table A.11: Compensation

Comments, issues, and suggestions	Stakeholder	Date	Source	Response
Not everybody whose property has been destroyed by the project has received compensation.	Malam Tangado (Representative from NGO Mining Commission)	9 December 2013	Stakeholder Consultation Meeting at Saliquenhni	
Our livelihoods have been destroyed without compensation	Causo Queita-Farmer	11 December 2013	Stakeholder Consultation Meeting at Canco Tu Mam Na	
Our farms (mango, cashew, and rice) have all been destroyed but the project has delayed in compensation payment. Why?	Lamine Cisse-Tailor Mussa Mancal-Farmer Ue Sissi-Farmer Lamine Dabo-Farmer	9 December 2013 10 December 2013 11 December 2013	Stakeholder Consultation Meeting at Saliquenhni. Stakeholder Consultation Meeting at Sandjal Stakeholder Consultation Meeting at Tambato Stakeholder Consultation Meeting at Canico Tu Man Na	
We still do not know if we are ever going to be compensated for the destruction of our farms	Malam Tangado (Representative from NGO Mining Commission)	9 December 2013	Stakeholder Consultation Meeting at Saliquenhni.	
What will happen to our farm lands if they are going to be impacted by the project? (Making reference to compensation payments)	Jambo Keita-Farmer	10 December 2013	Stakeholder Consultation Meeting at Canico.	
We need our compensation money	Mamuda Camara-Student		Stakeholder Consultation Meeting at Sandjal	
We have been invited to attend public consultation meeting without the project providing incentives (Transportation , food and drink)	Saliquenhi Chief	9 December 2013	Stakeholder Consultation Meeting at Saliquenhi	

Comments, issues, and suggestions	Stakeholder	Date	Source	Response
Compensation values are not known to affected people. On the few occasions when compensation has been paid, the recipients were never told the values of property nor criteria for paying(e.g., only mature cashew trees have been paid for; young trees were not paid for)	Causo Queita-Farmer	11 December 2013	Stakeholder Consultation Meeting at Canico Tu Man Na	

Table A.12: Environment

Comments, issues, and suggestions	Stakeholder	Date	Source	Response
We fear our sources of drinking water will be contaminated by the operations of the project.	Malam Tangado (Representative from NGO Mining Commission) Mamadu Ture-Farmer	9 December 2013 11 December 2013	Stakeholder Consultation Meeting at Saliqueinhni Stakeholder Consultation Meeting at Canico Tu Man Na	Before the start of the project, a baseline study as part of the ESIA study is undertaken to determine any potential impact on environment and social conditions on the project site. All potential impact identified will have a corresponding mitigation measure to address them. The methods to manage potential impacts will be included in the final ESIA report which will be available to the public.
All mining projects come with negative impacts.	Binta Queita-Farmer MalamTangado(Representative from NGO Mining Commission)	9 December 2013	Stakeholder Consultation meeting at Saliquehn	
With the production of phosphate we fear our farms are going to be contaminated.	Abdullai Songo-Farmer	10 December 2013	Stakeholder Consultation Meeting at Sandjal	
Our water bodies have been polluted by the actions and inactions of the project	Mama Dabo-Farmer			
Can the project assure us that our rivers, streams and water bodies will not be impacted by the operations of these projects?	Malam Tangodo (Representatives from NGO Mining commission)	9 December 2013	Stakeholder Consultation Meeting at Saliquenhe	All potential impact identified will have a corresponding mitigation measure to address them. The methods to manage potential impacts will be included in the final ESIA report which will be available to the public.
What is the decommissioning plan for the project?	Injia camara-Farmer			The decommissioning plan is being developed as part of the ESIA; the overall objective is to restore the property to a state that is safe and in harmony with the surrounding land.
Property assessment or inventory should have been undertaken before the project destroys out property.	Injia camara-Farmer			
Will the many drill holes in our farm land carried out by the project be covered?	Braima Cisse-Tailor Lamine Cissi-Tailor			
We need portable water. Currently what is available contains too much iron.	Aue Keita-Farmer	11 December 2013	Stakeholder Consultation Meeting at Canico Tu Man Na	

Comments, issues, and suggestions	Stakeholder	Date	Source	Response
Cut box pit has been opened six years ago and never been covered. What is the guarantee that the project will ever follow reclamation plan?	Binta Queita-Farmer Abu Cisse-Imam	9 December 2013 10 December 2013	Stakeholder Consultation Meeting at Saliquenhe Stakeholder Consultation Meeting at Sandjal	
The cut box at pit 1 has collected water and as a result, mosquitoes are breeding. This has become a health and safety concern.	Binta Queita-Farmer Abu Cisse-Imam	9 December 2013 10 December 2013	Stakeholder Consultation Meeting at Saliquenhe Stakeholder Consultation Meeting at Sandjal	
Why is the ESIA process important in the project?	Malam Tangodo (Representatives from NGO Mining commission)	9 December 2013	Stakeholder Consultation Meeting at Saliquenhe	The ESIA is important for many reasons including: 1. It is a legal requirement – before the project can begin, it needs authorization from the government and the ESIA is an important part of the process. 2. All potential impacts identified will have a corresponding mitigation measure to address them. This protects the environment and the people who may be affected by the project. 3. Consultation for the ESIA is to inform people about the project and get comments/ questions. It is also an opportunity to learn from the local communities (e.g., about local traditions)

Table A.13: Socio-economic

Comments, issues, and suggestions	Stakeholder	Date	Source	Response
What are the potential social impact the project is going to have on us(humans)	Malam Tangado(Representative from NGO Mining Commission)	9 December 2013	Stakeholder Consultation Meeting at Saliquehn	The findings of the ESIA studies will identify any socio economic impact and potential impacts are being addressed.
Resettlements will disturb the social structure in the society. This will be difficult for us to cope with.	Bakara Dabo-Town Mayor of Canico Abu Sisse-Farmer	10 December 2013	Stakeholder Consultation Meeting at Canico Stakeholder Consultation Meeting at Tambato	The ESIA studies will come out with findings whether or not resettlement will be an option or not.
Quality of life has lowered because of actions of the project(Making reference to how the project has destroyed their cashew and rice farms without compensation payment)	Falumata Baro-Salt Producer		Stakeholder Consultation Meeting at Canico	
With the start of the project there is going to be influx of people into our communities. What is the project going to do about this concern?	Banba Sisse-Farmer		Stakeholder Consultation Meeting at Tambato	
From the time when the project began its operations in our communities, our standard of living began to dwindle.	Ue Sisse-Farmer		Stakeholder Consultation Meeting at Tambato	
We are pleased to see one of our own (Making reference to Armando Conte) in the stakeholder consultation team. To say the least, we know our interest will be protected and guaranteed.	Amadu Embalo-Farmer	11 December 2013	Stakeholder Consultation Meeting at Canico Tu Man Na	Armando is working for GB Minerals; Armando represents the company and answers questions related to the company.
We urge the project to preserve and protect our cemeteries, grooves and shrines.	Mallam Sisse-Farmer Mamadu Ture-Farmer	10 December 2013 11 December 2013	Stakeholder Consultation Meeting at Tambato Stakeholder Consultation Meeting at Canico Tu Man Na	As part of the ESIA studies cultural and archaeological studies will be conducted to determine the existence of cultural sites and develop methods to manage them (e.g., fence off areas or remove artefacts). .
During Ramadan the project distributed sugar to the communities. We are sad that only Muslims benefited from this gesture.	Abdullai Songo-Student	10 December 2013	Stakeholder Consultation Meeting at Sandjal	

Comments, issues, and suggestions	Stakeholder	Date	Source	Response
All people regardless of religious belief should be respected.	Abdullai Songo-Student			Agreed and thanks for the comment.
How come parents have to pay the salaries of teachers in our community? This is a drain on our income levels.	Mussa Mancal-Farmer	10 December 2013	Stakeholder Consultation Meeting at Sandjal	This is a matter for the authorities to answer.
The interest of the youth in the project area should be taken into consideration	Lassana Tanbado-Farmer	9 December 2013	Stakeholder Consultation Meeting at Saliquenhi	Thanks for your suggestion
We have to walk longer distances to Farim to bring our farm produce to the market. Can the project build a market for us?	Causo Queitamer	11 December 2013	Stakeholder Consultation Meeting at Canico Tu Man Na	The provision of social services is the function of government. The project during the production phase will be expected to pay taxes and royalties to government ant it is expected that these monies will be used to provide the social services.
Transportation will certainly boost our living conditions. We can transport our farm produce to the market on time before they perish.	Causo Queita-Farmer	11 December 2013	Stakeholder Consultation Meeting at Canico Tu Man Na	
Perhaps the greatest asset the project can offer us is education. Without it our kids cannot be employed into the project.	Causo Queita-Farmer			
Education will take us out of poverty levels. So we want the project to build schools in our community.	Causo Queita-Farmer			

APPENDIX B

March 2011 Posters

UM TÍPICO CICLO DE EXPLORAÇÃO DE MINAS

O Projecto hoje

Estudo de viabilidade

O processo de confirmação da viabilidade comercial do minério de fosfato para extracção

Estudo de viabilidade, incluindo Avaliação do impacto Ambiental e Social (ESIA)

O processo de estudo dos possíveis impactos de um projecto proposto nos ambientes biológico, social e económico, relacionados com o desenvolvimento do projecto

Projecto de Execução

Inclui a concepção da mina, infra-estruturas e meios de transporte

Construção

A fase de construção inclui a preparação para a mineração e construção de infra-estruturas

Exploração

O prcesso de extracção do minério da mina e processamento

Reabilitação e Encerramento

As fases finais, quando a mina for encerrada

Reuniões da comunidade

O **ambiente social** inclui pessoas e comunidades, os seus meios de subsistência, a saúde humana e o património cultural.

O ambiente biológico inclui plantas e animais em terra e na água.

Águia de crista longa

Iguana da árvore

Monitorização da qualidade do ar

O **ambiente físico** inclui ar, ruído, água, solo e elementos visuais.

Golder Associates

ESTUDOS ESPECIALIZADOS DA ESIA

PROJECTO PROPOSTO DE FOSFATO DE FARIM NAS SUAS ACTIVIDADES TÍPICAS

Camiões de minas para transporte do minério de fosfato na mina a céu aberto de Farim

O Projecto de mina a céu aberto em Farim

Pipeline para transportar o fosfato desde Farim até ao porto

Cargueiro para transportar o fosfato até aos mercados internacionais

Desenvolvimento do Porto Chugue para que o fosfato possa ser carregado nos cargueiros

DE QUE FORMA AS PESSOAS CONHECERÃO O PROJECTO?

A consulta pública constitui uma componente importante do processo ESIA (Estudo de impacto "Social e Ambiental"). Este processo envolve:

- ❑ A identificação dos individuos e organizações que possam ter interesse no Projecto (por exemplo, residentes em locais próximos do Projecto, organizações locais e autoridades governamentais);
- ❑ Reuniões com comunidades – sendo esta uma oportunidade para travarem contacto com a equipa ESIA e com os representantes da GB Minerals, colocar questões e expor preocupações; e
- ❑ Prestar informação sobre o processo ESIA.

Esta primeira ronda de consultas é a chamada "consulta de delimitação". Haverá uma outra fase de consultas designada por "consulta de avaliação de impacto", a ter lugar mais tarde em 2012, momento em que a Tropica Environmental Consultants apresentará os resultados do estudo ESIA. Haverá muito mais informação sobre o Projecto nessa fase.

QUEM IRÁ DECIDIR SE A MINA SERÁ DESENVOLVIDA?

Após a conclusão dos estudos, será enviado um relatório ESIA para a GB Minerals e para as autoridades governamentais responsáveis pela tomada de uma decisão sobre o Projecto.

COMO BENEFICIARÃO AS COMUNIDADES COM O PROJECTO PROPOSTO?

- ❑ A GB Minerals pagará impostos e royalties ao Governo da Guiné Bissau.
- ❑ Surgirão oportunidades de emprego
- ❑ Formação para alguns nacionais
- ❑ Oportunidades de negócio locais

O QUE É O FOSFATO E PARA QUE É USADO?

O Fosfato é um mineral de origem natural, essencial para as plantas, animais e vida humana. Os fosfatos são usados essencialmente para produzir fertilizantes para a indústria agrícola.

OPORTUNIDADE DE COMENTAR

Março de 2012

Este documento visa prestar informação para contextualizar o Projecto e o processo de avaliação de impacto ambiental e social (ESIA) a interessados e implicados. Esta partilha de informação integra um programa de consulta pública em torno da ESIA.

As pessoas e organizações interessadas são convidados a completar a folha com comentários anexa e a enviá-la, via correio electrónico, para a Tropica Environmental ou para o Departamento de Assuntos Comunitários da GB Minerals, ou inseri-la nas caixas de comentários disponíveis em Farim, etc....

TROPICA ENVIRONMENTAL CONSULTANTS
N.° 8181 Liberté 6 – BP 5335 Dakar-Fann
Dakar – Senegal

Dr. Samba Yade
Telef. +221 77 244 66 77
+221 33 867 18 98
Email: tropica@orange.sn

GB MINERALS Sarl
BP 284 Alto Bandim
Bissau – Guiné Bissau
Telef. +245 682 23 59
Email: acmtolentino@hotmail.com

Documento informativo sobre a Consulta Pública

Março de 2012

OBJECTIVO DESTE DOCUMENTO

A GB Minerals encontra-se a analisar a possibilidade de desenvolver uma mina de fosfato junto a Farim, no noroeste da Guiné Bissau, África Ocidental. Este documento informa os interessados sobre:

- ❑ O Projecto proposto de Fosfato em Farim (o Projecto); e
- ❑ O processo de Avaliação do seu Impacto Ambiental e Social (ESIA).

O proceso ESIA está a ser conduzido pela Tropica Environmental e Golder Associates.

No âmbito da ESIA, a equipa da Tropica Environmental participará em reuniões em Farim e na região onde o projecto será implantado. Todos os interessados no Projecto terão oportunidade de contactar os representantes da equipa do processo ESIA e com a GB Minerals, e de com eles discutirem o projecto e a evolução daquele processo ESIA. Nestas reuniões será prestada informação através de apresentações, discussões, cartazes, planos e documentos informativos.

Os interessados são incentivados a fazer comentários, colocar questões e expor quaisquer preocupações que tenham. Os comentários e questões recebidas no âmbito da consulta serão reduzidos a escrito e gravados a fim de serem incluídas no relatório ESIA.

CONTEXTO

QUEM SÃO OS RESPONSÁVEIS PELO DESENVOLVIMENTO DO PROJECTO?

A GB Minerals encontra-se a desenvolver o Projecto de Fosfato Farim.

Em Maio de 2009, foi assinado um acordo de mineração entre a GB Minerals e o Governo de Guiné Bissau, no âmbito do qual foi emitida a licença de mineração e de arrendamento da mineração.

QUAL É O PROJECTO?

O projecto será uma mina a céu aberto junto a Farim. A mina terá um período de exploração de aproximadamente 25 a 50 anos, com uma produção anual estimada em 2 milhões de toneladas de fosfato por ano.

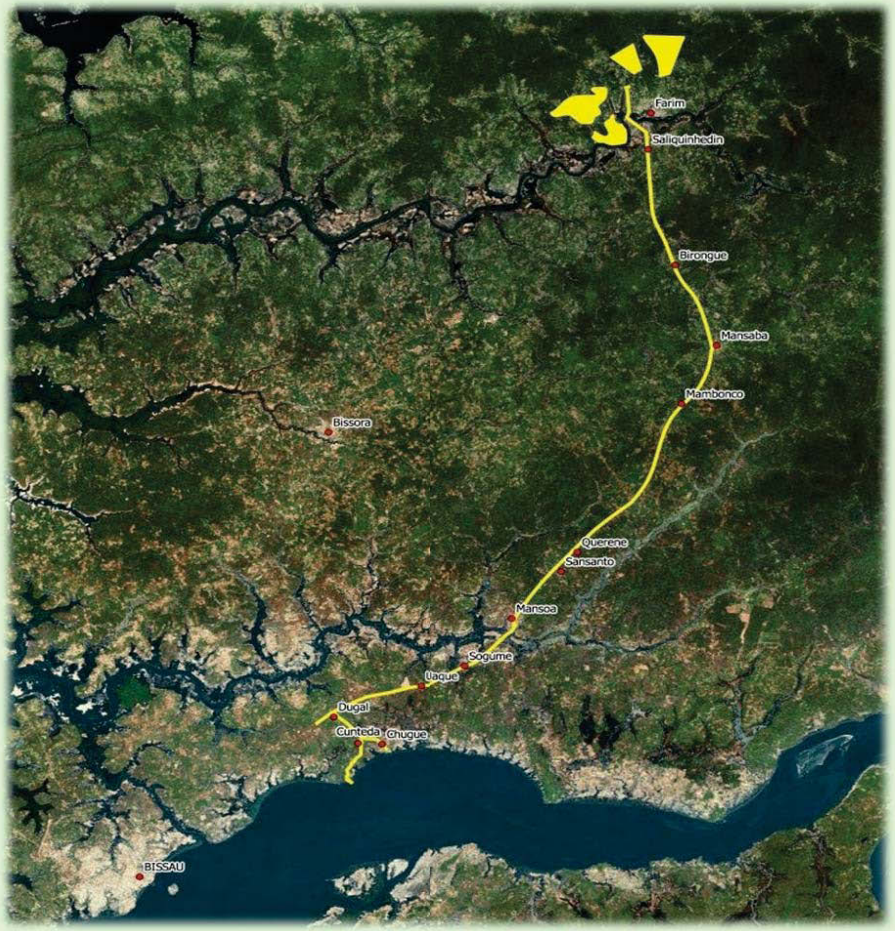

Figura 1: Localização do projecto proposto

ONDE SE LOCALIZA O PROJECTO?

O projecto localiza-se a aproximadamente 5km a oeste da cidade de Farim e a 25km a sul da fronteira senegalesa. O local é acessível a partir da cidade-capital de Bissau em 120km de estrada, que atravessa a cidade de Mansoa.

COMO SE PROCESSARÁ A EXTRACÇÃO MINEIRA?

Para começar a operar uma típica mina a céu aberto, procede-se, em primeiro lugar, à remoção da vegetação e de seguida à remoção do solo e rochas em camadas separadas, a serem armazenadas em reservas. Isto fará com que o fosfato fique exposto e possa então ser extraído.

Na mineração do fosfato, após a extracção do minério de fosfato, a rocha e o solo serão devolvidos às áreas mineradas. As áreas serão, depois, progressivamente reabilitadas com solo armazenado e que será utilizado para restaurar o solo e fazer crescer a vegetação.

O minério de fosfato será convertido num concentrado de fosfato na unidade de beneficiação em Farim e será, depois, transportado por gasoduto desde Farim até ao porto em Punta Chugue no Rio Geba. O concentrado de fosfato será, depois, transportado via Rio Geba até aos mercados internacionais.

PORQUE RAZÃO É NECESSÁRIA A AVALIAÇÃO DE IMPACTO AMBIENTAL E SOCIAL (ESIA)?

A investigação dos impactos potenciais nos sectores biológico, físico e social representa uma importante parte da preparação para o desenvolvimento de uma mina. Uma equipaa de cientistas irá desenvolver estudos em matérias como plantas, animais, água, ar, ruído, Arqueologia, locais sagrados, impactos na economia local e comunidades residentes na área do projecto. Este é uma exigência legal de acordo com a lei guineense.

QUADRO LEGAL

A GB Minerals agirá de acordo com a legislação de Guiné Bissau. As leis aplicáveis incluem as estabelecidas pelo Secretário de Estado do Ambiente e pelo Ministério da Energia e Recursos Naturais. A GB Minerals irá igualmente cumprir com os requisitos da ESIA, incluindo a "Lei sobre a Avaliação Ambiental" de 2010 (Lei 10/2010).

CALENDÁRIO PARA O PROJECTO DE FOSFATO DE FARIM

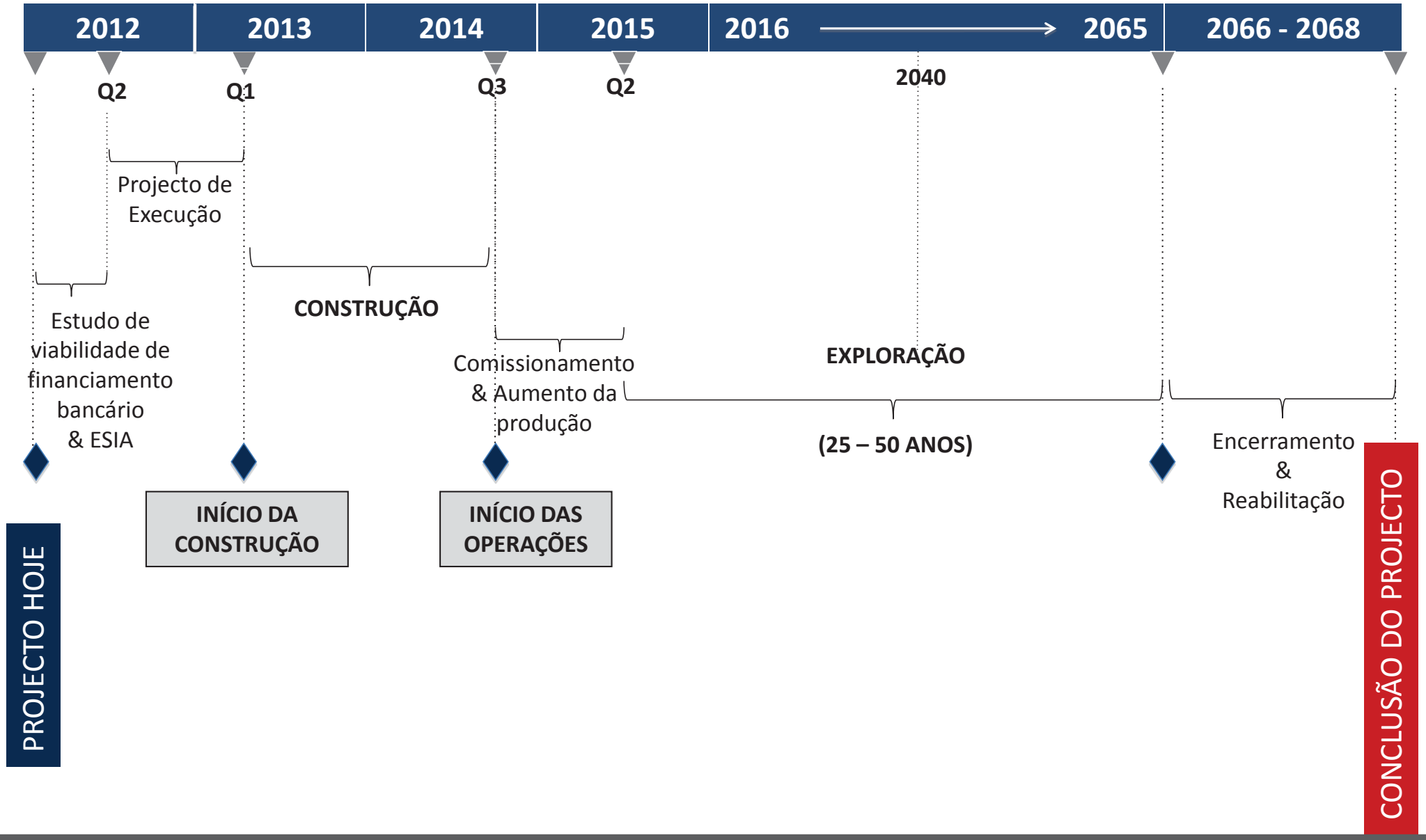

APPENDIX C

Field Report December 2013

TECHNICAL MEMORANDUM

DATE 2 January 2014 **DOCUMENT NO.** 13514950201/504.B0

TO Phil Mason
GB Minerals Ltd

CC Armando Conte, Owen Ryan

FROM Carl Nicholas **EMAIL** cnicholas@golder.com

FARIM PHOSPHATE PROJECT– ESIA PUBLIC CONSULTATION MEETINGS DECEMBER 2013

1.0 INTRODUCTION

As part of the Environmental and Social Impact (ESIA) procedure, ten public consultation meetings were held in Guinea Bissau between 6 and 11 December 2013. The purpose of the meetings was to give stakeholders an update on the Farim Phosphate Project (the project), and provide an opportunity to ask questions and make comments. Meetings were held in Bissau with representatives of government agencies, and in Farim and surrounds with local authorities and communities.

The stakeholders welcomed the opportunity to attend meetings about the project and make their comments and questions; the authorities and other stakeholders participated by asking questions and making comments.

2.0 THE MEETINGS

The dates, stakeholder groups, venues and number of attendees at the ESIA consultation meetings are summarised in Table 1.

Table 1: Public Consultation Meetings

Date	Stakeholder Group	Venue	Number of Attendees
6 December	Representative of the Ministry of Geology and Mining	Board Room, Bissau	7
6 December	Representatives from the Office of Environmental Assessment (CAIA)*	CAIA Office, Bissau	11
8 December	Project Workers (Dry Run)	Project Office, Farim	11
9 December	Saliquenhe Community	Seliquenhi	142
10 December	Tambato Community	Tambatu	61
10 December	Sandjal Community	Sandjil	65
10 December	Canico Community	Canico	102
11 December	Representatives from surrounding Communities (Canico Tumana,Orque and Sare-Ioba).	Canico Tumane	226
11December	Ponta Capsec Community	Ponta Capsec	21
11 December	Ponta Zeca Community	Ponta Zeca	23

* CAIA: Cellule d'Evaluation de l'Impact Environnemental

2.1 SUMMARY OF KEY ISSUES

The meetings followed a set format, starting with general introductions, followed by a presentation of project information and an opportunity to raise questions and concerns. The meetings were interactive and the following issues were raised and comments made by the local communities:

- People said they were happy that consultation meetings took place as it provided them an insight into the project and opportunity to be involved;
- The communities appear to regard the project as a surrogate government in terms for providing means for development. It was claimed that the government had failed to provide the communities with any substantial infrastructure development. In general, it appears that the communities mistrust the Government;
- There was an apparent mistrust of the project in the communities. People claimed that in the past promises have been made regarding resettlement and compensation for exploration and mining activities which have not been honoured. It should be noted that no additional information was provided to the consultation team on who made these promises and what specifically they were;
- It was stated that no compensation payments have been received from the project even though farms were said to have been destroyed. It was claimed that compensation values are not known to affected people. On the few occasions when compensation has been paid, recipients were never told the values of property nor criteria for paying (e.g., only mature cashew trees have been paid for; young trees were not paid for);
- People questioned why the government was never represented at the public consultation meetings;
- There was suspicion that the project and government are colluding to develop the project without supporting the local communities;
- People asked if the project will ever commence, as “it has been seven years since communities first heard about the project”;
- There is concern that fertility of the land will be affected, based on the belief “that phosphate is a fertiliser; mining it means removing the fertiliser from the land”. People are concerned that their main livelihood, agriculture, would be lost;
- The women asked for rice milling and salt processing machines to assist them with farming; this was raised in all communities visited;
- Farmers said that they were not consulted before the project gained access to their land where crops and trees grow (e.g., mango, cashew trees, rice, and oranges); the activities referred to were drilling and exploration activities;
- Opportunities for training and skill development were requested; this is in anticipation of the start of the project so that local people are prepared and ready to apply for jobs advertised;
- People asked if local people would be employed in the project. People did not want foreigners brought in to take up jobs in the project that could be undertaken by local people, as was claimed for the exploration work;
- The open pit (box cut) has not been covered. It was asked “What is the guarantee that with decommissioning of the project, the project will be committed to reclamation and rehabilitation?”;
- The open pit (box cut) has become health concern. It is believed to breed mosquitoes and is also a safety concern to residents;
- People said they were worried that they were going to be resettled. Relocation is a concern because residents fear they will not have lands to continue farming activities. People said they will oppose relocation because there would be loss of livelihoods;

- People said they were worried that cultural sites like shrines, cemeteries and grooves (sacred places that people have cultural attachment to, mostly in the forests) would be destroyed by the project;
- People claimed that there has been no grievance mechanism for people to make a complaint;
- Communities expressed unhappiness about the project fee of 300 million CFA paid to government; the perception is that the money has been squandered;

  N.B., this comment came up in most of the meetings;
- People requested services be provided by the project (e.g., roads, schools, hospitals, churches, transportation);
- People said that currently, project vehicles would not stop to offer lifts even when going in the same direction;
- It was claimed that drinking water would be contaminated by mining; and
- People requested the company assist with irrigation schemes to support farming throughout the year by reducing dependency on rain.

3.0 GOLDER OBSERVATIONS FROM PUBLIC CONSULTATION MEETINGS

Based on the meetings and interactions with local communities, the Golder team made the following general observations:

- People have goodwill towards the project. It is important to maintain this goodwill which will be best achieved by keeping stakeholders engaged through meetings;
- There appeared to be a general feeling that communities are being neglected by both the government and project. In many cases the communities do not trust that the Project or the Government are willing to provide support to local communities;
- The project should develop a register to record potential community development opportunities that have been identified. It will help the project at a later stage if it wants to undertake some community development programmes; no commitments will be made by undertaking this exercise now;
- The stakeholders were happy with the meetings as there had been a general feeling of exclusion from the project. They would also like to see actions to support the messages given out by the Project, given the past promises made on behalf of the company; and
- The stakeholder engagement process conducted by GB Minerals, should continue throughout the development of the project. The Public Consultation process (for the ESIA) provides a mechanism for disseminating information and supporting the stakeholder engagement process. Both processes enable clear and consistent messages to reach stakeholders. In the absence of information, misinformation tends to circulate, which focuses on the negative impacts. Misinformation can also raise unrealistic expectations amongst stakeholders.

4.0 CONCLUSION

Further engagement by the Project will be necessary once the project impacts have been identified in the ESIA Report. This is primarily the role of the Project's Stakeholder Engagement team, to enable responses to the issues raised during the Public Consultation to be communicated to stakeholders.

In addition, and as part of the project stakeholder engagement plan, the concerns of communities should be addressed so that misunderstandings can be sorted out (e.g., the role of the company as a private company and the role of the government and its responsibility for providing services).

Overall, the response from the authorities and wider community groups was generally positive. A full public consultation and disclosure report (with comments and responses) will be drafted and sent to GB Minerals in January 2014.

Darren King
Project Manager

Carl Nicholas
ESIA Task Lead

OOA/MAT/CN/DAK/nk

APPENDIX D

December 2013 Posters

DE QUE FORMA AS PESSOAS CONHECERÃO O PROJECTO?

A consulta pública constitui uma componente importante do processo ESIA (Estudo de impacto "Social e Ambiental"). Este processo envolve:

❑ A identificação dos individuos e organizações que possam ter interesse no Projecto (por exemplo, residentes em locais próximos do Projecto, organizações locais e autoridades governamentais);
❑ Reuniões com comunidades – sendo esta uma oportunidade para travarem contacto com a equipa ESIA e com os representantes da GB Minerals, colocar questões e expor preocupações; e
❑ Prestar informação sobre o processo ESIA.

Esta ronda de consultas é chamada "consulta de avaliação de impacto". Nesta rounda a GB Minerals e a Golder Associates (consultores independentes) vão apresentar os resultados do estudo ESIA.

QUEM IRÁ DECIDIR SE A MINA SERÁ DESENVOLVIDA?

Após a conclusão dos estudos, será enviado um relatório ESIA para a GB Minerals e para as autoridades governamentais responsáveis pela tomada de uma decisão sobre o Projecto.

COMO BENEFICIARÃO AS COMUNIDADES COM O PROJECTO PROPOSTO?

❑ A GB Minerals pagará impostos e royalties ao Governo da Guiné Bissau.
❑ Surgirão oportunidades de emprego
❑ Formação para alguns nacionais
❑ Oportunidades de negócio locais

O QUE É O FOSFATO E PARA QUE É USADO?

O Fosfato é um mineral de origem natural, essencial para as plantas, animais e vida humana. Os fosfatos são usados essencialmente para produzir fertilizantes para a indústria agrícola.

OPORTUNIDADE DE COMENTAR

Este documento visa prestar informação para contextualizar o Projecto e o processo de avaliação de impacto ambiental e social (ESIA) a interessados e implicados. Esta partilha de informação integra um programa de consulta pública em torno da ESIA.

As pessoas e organizações interessadas são convidados a completar a folha com comentários anexa e a enviá-la, via correio electrónico, para a Tropica Environmental ou para o Departamento de Assuntos Comunitários da GB Minerals, ou inseri-la nas caixas de comentários disponíveis em Farim, etc....

GB MINERALS Sarl
BP 284 Alto Bandim
Bissau – Guiné Bissau
Telef. +245 682 23 59
Email: acmtolentino@hotmail.com
inquire@gbminerals.com

Documento informativo sobre a Consulta Pública

Dezembro 2013

OBJECTIVO DESTE DOCUMENTO

A GB Minerals encontra-se a analisar a possibilidade de desenvolver uma mina de fosfato junto a Farim, no noroeste da Guiné Bissau, África Ocidental. Este documento informa os interessados sobre:

- ❑ O Projecto proposto de Fosfato em Farim (o Projecto); e
- ❑ O processo de Avaliação do seu Impacto Ambiental e Social (ESIA).

O proceso ESIA está a ser conduzido pela Tropica Environmental e Golder Associates.

No ambito da ESIA, a consulta para o projecto esta a decorrer e inclui reuniões com as comunidades da região do projecto. Todos os interessados no Projecto terão oportunidade de contactar os representantes da equipa do processo ESIA e com a GB Minerals, e de com eles discutirem o projecto e a evolução daquele processo ESIA. Nestas reuniões será prestada informação através de apresentações, discussões, cartazes, planos e documentos informativos.

Os interessados são incentivados a fazer comentários, colocar questões e expor quaisquer preocupações que tenham. Os comentários e questões recebidas no âmbito da consulta serão reduzidos a escrito e gravados a fim de serem incluídas no relatório ESIA.

CONTEXTO

QUEM SÃO OS RESPONSÁVEIS PELO DESENVOLVIMENTO DO PROJECTO?

A GB Minerals encontra-se a desenvolver o Projecto de Fosfato Farim.

Em Maio de 2009, foi assinado um acordo de mineração entre a GB Minerals e o Governo de Guiné Bissau, no âmbito do qual foi emitida a licença de mineração e de arrendamento da mineração.

QUAL É O PROJECTO?

O projecto será uma mina a céu aberto junto a Farim. A mina terá um período de exploração de aproximadamente 25 a 50 anos, com uma produção anual estimada em 2 milhões de toneladas de fosfato por ano.

Figura 1: Localização do projecto proposto

ONDE SE LOCALIZA O PROJECTO?

O projecto localiza-se a aproximadamente 5km a oeste da cidade de Farim e a 25km a sul da fronteira senegalesa. O local é acessível a partir da cidade-capital de Bissau em 120km de estrada, que atravessa a cidade de Mansoa.

COMO SE PROCESSARÁ A EXTRACÇÃO MINEIRA?

Para começar a operar uma típica mina a céu aberto, procede-se, em primeiro lugar, à remoção da vegetação e de seguida à remoção do solo e rochas em camadas separadas, a serem armazenadas em reservas. Isto fará com que o fosfato fique exposto e possa então ser extraído.

Na mineração do fosfato, rocha é removida e após a extracção do minério de fosfato, parte da rocha e do solo inicialmente removidos serão devolvidos às áreas mineradas. As áreas serão, depois, progressivamente reabilitadas com solo armazenado e que será utilizado para restaurar o solo e fazer crescer a vegetação.

O minério de fosfato será convertido num concentrado de fosfato na unidade de beneficiação em Farim e será, depois, transportado por gasoduto desde Farim até ao porto em Punta Chugue no Rio Geba. O concentrado de fosfato será, depois, transportado via Rio Geba até aos mercados internacionais.

PORQUE RAZÃO É NECESSÁRIA A AVALIAÇÃO DE IMPACTO AMBIENTAL E SOCIAL (ESIA)?

A investigação dos impactos potenciais nos sectores biológico, físico e social representa uma importante parte da preparação para o desenvolvimento de uma mina. Uma equipaa de cientistas irá desenvolver estudos em matérias como plantas, animais, água, ar, ruído, Arqueologia, locais sagrados, impactos na economia local e comunidades residentes na área do projecto. Este é uma exigência legal de acordo com a lei guineense.

QUADRO LEGAL

A GB Minerals agirá de acordo com a legislação de Guiné Bissau. As leis aplicáveis incluem as estabelecidas pelo Secretário de Estado do Ambiente e pelo Ministério da Energia e Recursos Naturais. A GB Minerals irá igualmente cumprir com os requisitos da ESIA, incluindo a “Lei sobre a Avaliação Ambiental” de 2010 (Lei 10/2010).

UM TÍPICO CICLO DE EXPLORAÇÃO DE MINAS

O Projecto hoje

Estudo de viabilidade

O processo de confirmação da viabilidade comercial do minério de fosfato para extracção

Estudo de viabilidade, incluindo Avaliação do impacto Ambiental e Social (ESIA)

O processo de estudo dos possíveis impactos de um projecto proposto nos ambientes biológico, social e económico, relacionados com o desenvolvimento do projecto

Projecto de Execução

Inclui a concepção da mina, infra-estruturas e meios de transporte

Construção

A fase de construção inclui a preparação para a mineração e construção de infra-estruturas

Operação

O prcesso de extracção do minério da mina e processamento

Reabilitação e Encerramento

As fases finais, quando a mina for encerrada

PROJECTO PROPOSTO DE FOSFATO DE FARIM NAS SUAS ACTIVIDADES TÍPICAS

Camiões de minas para transporte do minério de fosfato na mina a céu aberto de Farim

O Projecto de mina a céu aberto em Farim

Camioes para transportar o fosfato desde Farim até ao porto

Cargueiro para transportar o fosfato até aos mercados internacionais

Desenvolvimento do Porto Chugue para que o fosfato possa ser carregado nos cargueiros

ESTUDOS ESPECIALIZADOS DA ESIA

Physical Studies

Landscape and Visual Aesthetics

Air Quality

Water Quality

Soils and Land Use

River Morphology

Geochemistry

Natural Hazards

Social Studies

Traffic Use

Socio Economic

Human Health

Cultural Heritage

Noise and Vibration

Archaeology

Biological Studies

Terrestrial Ecology

Aquatic Ecology

Ecological Risk Assessment

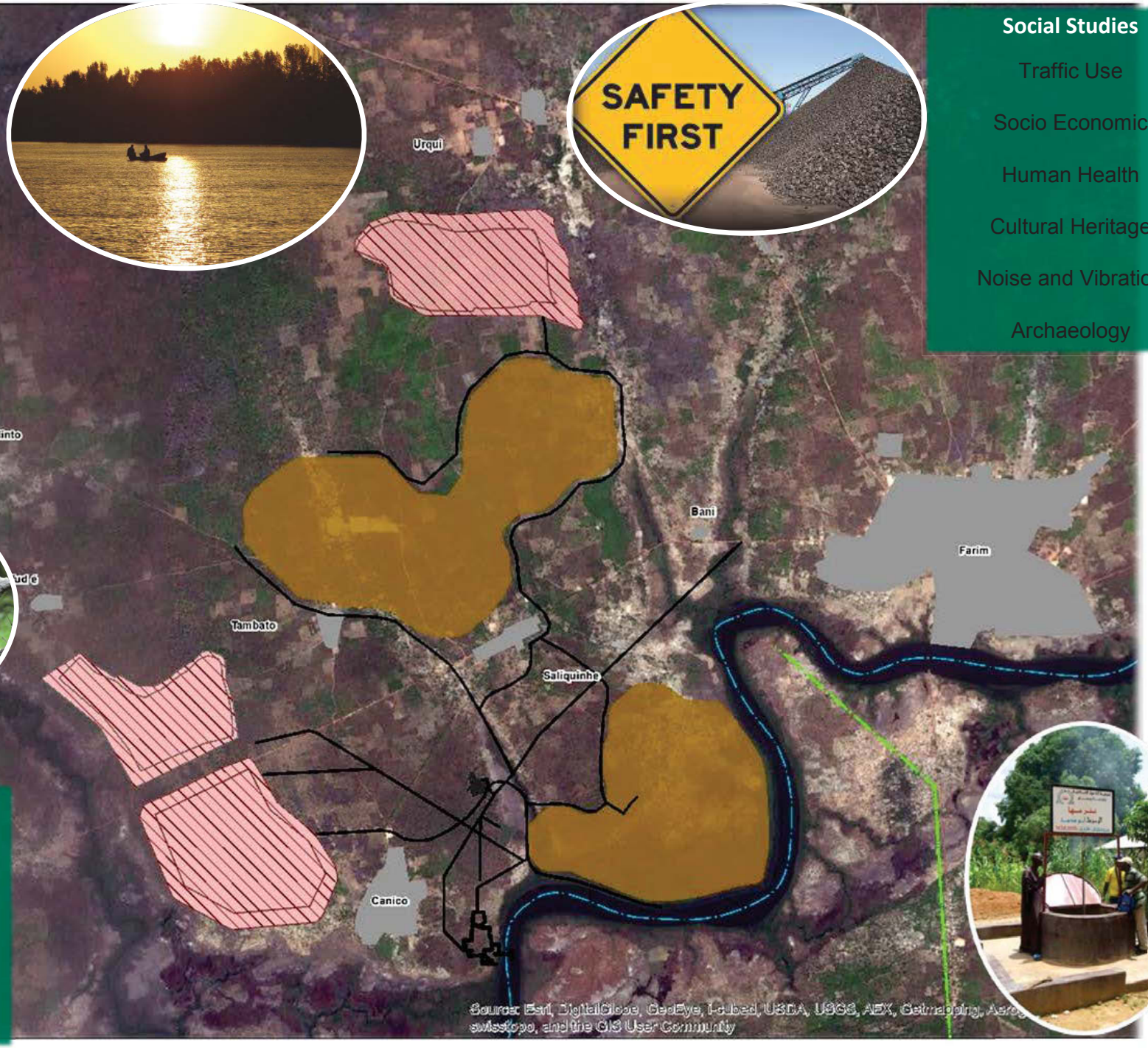

Physical Environment	
Water	Potential Impacts • Water supply – domestic and agricultural use • Quality of water – domestic and agricultural • Change of water courses and flows
Soil	Potential Impacts • Land Use changes • Soil erosion • Contamination of soils or sediments
Air and Noise	Potential Impacts • Changes of air quality (from dust or vehicle emissions) • Changes in ambient noise levels

Golder Associates

Potenciais Impactos do Projeto proposto

Biological Environment	
Aquatic and Terrestrial Ecology	Potential Impacts • Changes in natural habitat • Loss of species (animals and plants • Accidental introduction of exotic species via roads • Change in the productivity of the environment • Increased access to natural environments • Ecosystem services

Golder Associates

Potenciais Impactos do Projeto proposto

Communities	

Economy and Labour	Potential Impact
	• Direct
	  • In migration – leading to increased demand on community services (clinics, schools, potable water, etc)
	  • Economic opportunities – supply chain for project, leading to some increased prosperity
	• Indirect
	  • Increased road use and risk of accidents
	  • Change in availability and cost of community services

Local Development	Potential Impact • Investment in local infrastructure (through project taxes, with the expectation that these will be used for local infrastructure improvement) • Development of skills to support project
Archaeological and Cultural Heritage	Potential Impact • Disturbance of potential archaeological sites or cultural areas • Improved understanding of local cultural heritage

Golder Associates

Potenciais Impactos do Projeto proposto

APPENDIX E

Public Consultation Photographs

Dry-Run session at project office in Farim – 8 December 2013

Project officers in the dry-run session at Farim

Saliquenhé community – 9 December 2013

Consultation team explaining issues at Saliquenhé

Tambato – 10 December 2013 (Participation of women at meetings)

Listening to project information at Tambato

Sandjal – 10 December 2013 (setting up meeting)

Canico – 10 December 2013

Stakeholders with background information document

Canico Tuman – 11 December 2013

Ponta Capsec – 11 December 2013

Recording names of meeting participants

Ponta Zeca – 11 December 2013 (meeting facilitation)

Recording stakeholder comment and issues at Ponta Zeca

APPENDIX F

Attendance Register

PROJECTO DE FOSFATO DE FARIM. AVALIAÇÃO DE IMPACTO SOCIAL E AMBIENTAL (ESIA) PARA GB MINERALS.

REGISTO DE PRESENÇAS

Reunião : CANICO
Data : 10 DECEMBER 2013
Local : FARIM

Titulo	Nome	Apelido	Organização (por favor, não use siglas)	Endereço	Contacto	
Mr	Carl	Nicholas	Golder Associates (UK)	1Alie street, London E1 8DE,UK	Tel No:	00447814143523
					Fax No:	00442074230941
					Cell No:	00447814143523
					E-mail:	CNicholas@golder.com
					Signature:	
Mr	Mubaki	KEITA	Estudante	Kanico	Tel No:	
					Fax No:	
					Cell No:	
					E-mail:	
					Signature:	
Mr	Biré	Sese	Trabalhador	Kanico	Tel No:	
					Fax No:	
					Cell No:	6574019
					E-mail:	
					Signature:	

Titulo	Nome	Apelido	Organização (por favor, não use siglas)	Endereço	Contacto	
	OMAR	TURÉ	ESTUDANTES	Kanco	Tel No:	
					Fax No:	
					Cell No:	
					E-mail:	—
					Signature:	
	KEBA	DABI	ESTUDANTES	Kanco	Tel No:	
					Fax No:	
					Cell No:	—
					E-mail:	
					Signature:	
	LAMINE	DABI	11	Kanco	Tel No:	
					Fax No:	
					Cell No:	
					E-mail:	—
					Signature:	
	OMAR	DABI	11	Kanco	Tel No:	
					Fax No:	
					Cell No:	—
					E-mail:	
					Signature:	
	OMAR	KEITA	LAVRADOR	11	Tel No:	
					Fax No:	
					Cell No:	655 695
					E-mail:	
					Signature:	

Titulo	Nome	Apelido	Organização (por favor, não use siglas)	Endereço	Contacto	
	Malam	Dame	Estudante	Kanico	Tel No:	
					Fax No:	
					Cell No:	5790962
					E-mail:	
					Signature:	
	Pé	Braima ~~Mateba~~	Lavrador	Kanico	Tel No:	6588508
					Fax No:	
					Cell No:	
					E-mail:	
					Signature:	
	Side	Keita	Lavrador	Kanico	Tel No:	
					Fax No:	
					Cell No:	
					E-mail:	
					Signature:	
	Wie	Dabó	Lavrador	Kanico	Tel No:	
					Fax No:	
					Cell No:	
					E-mail:	
					Signature:	
	Mussa	Dabó	Lavradora	Kanico	Tel No:	
					Fax No:	
					Cell No:	
					E-mail:	
					Signature:	

Titulo	Nome	Apelido	Organização (por favor, não use siglas)	Endereço	Contacto	
	Mussa	Dueito	Lavrador	Kanico	Tel No:	
					Fax No:	
					Cell No:	
					E-mail:	
					Signature:	
	Bubacar	Keita	Lavrador	Kanico	Tel No:	
					Fax No:	
					Cell No:	
					E-mail:	
					Signature:	
	Sona	Keita	Domestica	Kanico	Tel No:	
					Fax No:	
					Cell No:	
					E-mail:	
					Signature:	
	Binta	Jabó	Domestica	Kanico	Tel No:	
					Fax No:	
					Cell No:	
					E-mail:	
					Signature:	
	Fatu	Turé	Domestica	Kanico	Tel No:	6349058
					Fax No:	
					Cell No:	
					E-mail:	
					Signature:	

Titulo	Nome	Apelido	Organização (por favor, não use siglas)	Endereço	Contacto	
	Cadi	Bodjam	Domestica	Kanico	Tel No:	
					Fax No:	
					Cell No:	
					E-mail:	
					Signature:	
	Nadindin	Dabó	Domestica	Kanico	Tel No:	6961233
					Fax No:	
					Cell No:	
					E-mail:	
					Signature:	
	Binta	Keita	Domestica	Kanico	Tel No:	
					Fax No:	
					Cell No:	
					E-mail:	
					Signature:	
	Fatu	Cissé	Domestica	Kanico	Tel No:	
					Fax No:	
					Cell No:	
					E-mail:	
					Signature:	
					Tel No:	
					Fax No:	
					Cell No:	
					E-mail:	
					Signature:	

10 DECEMBER 2013 CANICO VILLAGE

Titulo	Nome	Apelido	Organização (por favor, não use siglas)	Endereço	Contacto	
MV MV	Sadjo	Turé	Padeiro	Canico Ramos Corrente	Tel No:	6205965
					Fax No:	
					Cell No:	
					E-mail:	
					Signature:	
MV	Sulaimane	Turé	Lavrador	Canico Ramos Corrente	Tel No:	11
					Fax No:	
					Cell No:	
					E-mail:	
					Signature:	
MV	Madam Sattam	Dabo	Lavrador	Canico Ramos Corrente	Tel No:	6374234
					Fax No:	
					Cell No:	
					E-mail:	
					Signature:	
MV	Quebo	Turé	Lavrador	Canico Ramos Corrente	Tel No:	
					Fax No:	
					Cell No:	
					E-mail:	
					Signature:	
MV	Bacar	Dabo	Comerciante	Canico Ramos	Tel No:	6654754
					Fax No:	
					Cell No:	
					E-mail:	
					Signature:	

Titulo	Nome	Apelido	Organização (por favor, não use siglas)	Endereço	Contacto	
Mr/	Zacarias	Turé	Lavrador	Comico Nemba	Tel No:	
					Fax No:	
					Cell No:	
					E-mail:	
					Signature:	
Mr	Madeira	Dabo	Lavrador	Comico Nemba	Tel No:	
					Fax No:	
					Cell No:	
					E-mail:	
					Signature:	
Mr	Salifo	Dabo	Artesão	Comico Nemba	Tel No:	68952533
					Fax No:	
					Cell No:	
					E-mail:	
					Signature:	
Mr	Henri	Ouattara	Mecanique	Comico Nemba	Tel No:	64336470
					Fax No:	
					Cell No:	
					E-mail:	
					Signature:	
Mr	Samba	KEITA	Lavrador	Comico Nemba	Tel No:	
					Fax No:	
					Cell No:	
					E-mail:	
					Signature:	

Titulo	Nome	Apelido	Organização (por favor, não use siglas)	Endereço	Contacto	
M/	Cosiro	Keita	Navegador	Camico Nemo comercio	Tel No:	6973639
					Fax No:	
					Cell No:	
					E-mail:	
					Signature:	
M/	Ixel	Dago	Estudante	Camico Nemo	Tel No:	580400
					Fax No:	
					Cell No:	
					E-mail:	
					Signature:	
M/	badji	Keita	Navegador	Camico Nemo	Tel No:	11
					Fax No:	
					Cell No:	
					E-mail:	
					Signature:	
M/	Braima	Keita	Navegador	Camico Nemo	Tel No:	
					Fax No:	
					Cell No:	
					E-mail:	
					Signature:	
M/	Binta	Dago	Navegadora	Camico Nemo	Tel No:	11
					Fax No:	
					Cell No:	
					E-mail:	
					Signature:	

Titulo	Nome	Apelido	Organização (por favor, não use siglas)	Endereço	Contacto	
Mr	Salo	Sónico	Reviradora	Caminho Novo	Tel No:	4
					Fax No:	
					Cell No:	
					E-mail:	
					Signature:	
Mr	Djalica	Turé	Reviradora	Caminho Novo	Tel No:	1
					Fax No:	
					Cell No:	
					E-mail:	
					Signature:	
Mr	Binke	Baldo	Reviradora	Caminho Novo	Tel No:	1
					Fax No:	
					Cell No:	
					E-mail:	
					Signature:	
Mr	Junto	Keita	Reviradora		Tel No:	1
					Fax No:	
					Cell No:	
					E-mail:	
					Signature:	
Mr	Mariam	Djalo	Reviradora		Tel No:	62690841
					Fax No:	
					Cell No:	
					E-mail:	
					Signature:	

Titulo	Nome	Apelido	Organização (por favor, não use siglas)	Endereço	Contacto	
MV	Baba	KEITA	EDTesom	Comico Remico	Tel No:	11
					Fax No:	
					Cell No:	
					E-mail:	
					Signature:	
MV	MAMADim	KEITA	EDTesom	Comico Remico	Tel No:	11
					Fax No:	
					Cell No:	
					E-mail:	
					Signature:	
MV	DJenaba	DABO	Lavradora	Comico Remico	Tel No:	
					Fax No:	
					Cell No:	
					E-mail:	
					Signature:	
MV	Bita	DABO	Lavradora	Comico Remico	Tel No:	
					Fax No:	
					Cell No:	
					E-mail:	
					Signature:	
MV	Enda	Turé	Lavradora	Comico Remico	Tel No:	
					Fax No:	
					Cell No:	
					E-mail:	
					Signature:	

Titulo	Nome	Apelido	Organização (por favor, não use siglas)	Endereço	Contacto	
MV	MARIAMA	NOZAI	LaVraSora	Comico Nemfue	Tel No:	V
					Fax No:	
					Cell No:	
					E-mail:	
					Signature:	
MV	DJALICA	DABO	LaVraSora	Comico Nemfue	Tel No:	V
					Fax No:	
					Cell No:	
					E-mail:	
					Signature:	
MV	Binta	Seremont	LaVraSora	Comico Nemfue	Tel No:	
					Fax No:	
					Cell No:	
					E-mail:	
					Signature:	
MV	MOSQUEIA	DABO	LaVraSora	Comico Nemfue	Tel No:	
					Fax No:	
					Cell No:	
					E-mail:	
					Signature:	
MV	Binta	KEITA	LaVraSora	Comico Nemfue	Tel No:	
					Fax No:	
					Cell No:	
					E-mail:	
					Signature:	

Titulo	Nome	Apelido	Organização (por favor, não use siglas)	Endereço	Contacto	
M/	Aminata	Seido	Na Vrabadora	Canico Ramos	Tel No:	1
					Fax No:	
					Cell No:	
					E-mail:	
					Signature:	
M/	TENIM	KEITA	Na Vrabadora	Canico Ramos	Tel No:	11
					Fax No:	
					Cell No:	
					E-mail:	
					Signature:	
M/	Lansa	Sissé	Na Vrabadora	Canico Ramos	Tel No:	
					Fax No:	
					Cell No:	
					E-mail:	
					Signature:	
M/	Comba	Dabo	Na Vrabadora	Canico Ramos	Tel No:	4
					Fax No:	
					Cell No:	
					E-mail:	
					Signature:	

Titulo	Nome	Apelido	Organização (por favor, não use siglas)	Endereço	Contacto	
MV	Simão	Turé	ZaVradora	canico Ramos	Tel No:	
					Fax No:	
					Cell No:	
					E-mail:	
					Signature:	
MV	Seren	DAbo	ZaVradora	canico Ramos	Tel No:	
					Fax No:	
					Cell No:	
					E-mail:	
					Signature:	
MV	ALiMA	Turé	ZaVradora	canico Ramos	Tel No:	
					Fax No:	
					Cell No:	
					E-mail:	
					Signature:	
MV	Binta	KEITA	ZaVradora	canico Ramos	Tel No:	
					Fax No:	
					Cell No:	
					E-mail:	
					Signature:	
MV	Sebo	Dabo	ZaVradora	canico Ramos	Tel No:	
					Fax No:	
					Cell No:	
					E-mail:	
					Signature:	

Titulo	Nome	Apelido	Organização (por favor, não use siglas)	Endereço	Contacto	
Mr	Brima	Turé	Estudante	Canico Ramos	Tel No:	6520880
					Fax No:	
					Cell No:	
					E-mail:	
					Signature:	
Mr	Mariama	Dabo	Revisadora	Canico Ramos	Tel No:	
					Fax No:	
					Cell No:	
					E-mail:	
					Signature:	
Mr	Binta	Seide	Revisadoras	Canico Ramos	Tel No:	
					Fax No:	
					Cell No:	
					E-mail:	
					Signature:	
Mr	Amina	Keita	Revisadora		Tel No:	
					Fax No:	
					Cell No:	
					E-mail:	
					Signature:	
Mr	Edroza	Gomes	Estudante	Ts Farim	Tel No:	5396850
					Fax No:	
					Cell No:	
					E-mail:	
					Signature:	

Titulo	Nome	Apelido	Organização (por favor, não use siglas)	Endereço	Contacto	
MV	Binta	Turé	Lavradora	Canico Ramos	Tel No:	11
					Fax No:	
					Cell No:	
					E-mail:	
					Signature:	
MV	Bire	Seide	Produtor	Canico Ramos	Tel No:	6574019
					Fax No:	
					Cell No:	
					E-mail:	
					Signature:	
MV	Djalica	Turé	Produtora	Canico Ramos Caroucho	Tel No:	11
					Fax No:	
					Cell No:	
					E-mail:	
					Signature:	
MV	Carmen	Keita	Lavradora	Canico Ramos Caroucho	Tel No:	11
					Fax No:	
					Cell No:	
					E-mail:	
					Signature:	
MV	Djoka Sabo	Keita	Lavradora	Canico Ramos	Tel No:	
					Fax No:	
					Cell No:	
					E-mail:	
					Signature:	

Titulo	Nome	Apelido	Organização (por favor, não use siglas)	Endereço	Contacto	
MV	MORAN	DABO	ESTUDANTE	CAMPO GRANDE CORUMBÁ	Tel No:	92917738
					Fax No:	
					Cell No:	
					E-mail:	
					Signature:	
MV	MAMADIM	ATIYA	REVISADOR	CAMPO GRANDE CORUMBÁ	Tel No:	
					Fax No:	
					Cell No:	
					E-mail:	
					Signature:	
MV	RAMONE	ATIYA	REVISADOR	CAMPO GRANDE CORUMBÁ	Tel No:	
					Fax No:	
					Cell No:	
					E-mail:	
					Signature:	
MV	ABDO	DABO	REVISADOR	CAMPO GRANDE	Tel No:	92927791
					Fax No:	
					Cell No:	
					E-mail:	
					Signature:	
MV	FABRENA	ATIYA	REVISADOR	CAMPO GRANDE	Tel No:	
					Fax No:	
					Cell No:	
					E-mail:	
					Signature:	

Titulo	Nome	Apelido	Organização (por favor, não use siglas)	Endereço	Contacto	
MW	MAMADÚ	Dabo	Pedreiro	canico Lenguecurouto	Tel No:	6847949
					Fax No:	
					Cell No:	
					E-mail:	
					Signature:	
MW	MANDJAM	DABO	Lavradora	canico Lenguecurouto	Tel No:	11
					Fax No:	
					Cell No:	
					E-mail:	
					Signature:	
MC	Lamine	Seide	LAVRADOR	Canico Lenguecurouto	Tel No:	
					Fax No:	
					Cell No:	
					E-mail:	
					Signature:	
MC	Djamba	Keita	Comercio	canico lenguecurouto	Tel No:	6681536
					Fax No:	
					Cell No:	
					E-mail:	
					Signature:	

Titulo	Nome	Apelido	Organização (por favor, não use siglas)	Endereço	Contacto	
MC	Aissatu	Sisse	LAVORA	Canico lençuecurouto	Tel No:	
					Fax No:	
					Cell No:	
					E-mail:	
					Signature:	
MC	Totala	Turé	LAVORA	CANICO LENÇUECUROUTO	Tel No:	
					Fax No:	
					Cell No:	
					E-mail:	
					Signature:	
MC	TCHERNO	KEÏTA	Ass. do carro	Canico LENÇUECUROUTO	Tel No:	
					Fax No:	
					Cell No:	
					E-mail:	
					Signature:	
MC	Sabito	TURÉ	LAVORA	Canico LENÇUECUROUTO	Tel No:	
					Fax No:	
					Cell No:	
					E-mail:	
					Signature:	
MC	Fatu	Dabó	PRODUCTORA DO Sal	Canico LENÇUECUROUTO	Tel No:	
					Fax No:	
					Cell No:	
					E-mail:	
					Signature:	

Titulo	Nome	Apelido	Organização (por favor, não use siglas)	Endereço	Contacto	
MC	Fatumata	Baró	PRODUTORA do Sál	canico LENQUECUROUTO	Tel No:	
					Fax No:	
					Cell No:	
					E-mail:	
					Signature:	
MC	Umaro	Seide	LAVORA	canico LENQUECUROUTO	Tel No:	
					Fax No:	
					Cell No:	
					E-mail:	
					Signature:	
MC	Umaro	TURÉ	ESTUDANTE	canico LENQUECUROUTO	Tel No:	
					Fax No:	
					Cell No:	
					E-mail:	
					Signature:	
MC	Braima	Sisse	ESTUDANTE	canico LENQUECUROUTO	Tel No:	
					Fax No:	
					Cell No:	
					E-mail:	
					Signature:	
MC	Malam	TURÉ	ESTUDANTE	canico LENQUECUROUTO	Tel No:	
					Fax No:	
					Cell No:	
					E-mail:	
					Signature:	

Titulo	Nome	Apelido	Organização (por favor, não use siglas)	Endereço	Contacto	
MC	MUSTAFA	DABÓ	LAVORA	CANICO LENQUECUROUTO	Tel No: Fax No: Cell No: E-mail: Signature:	
MC	SERITO	DABÓ	LAVORA	CANICO LENQUECUROUTO	Tel No: Fax No: Cell No: E-mail: Signature:	
MC	FATU	KEITA	ESTUDANTE ARABE	CANICO LENQUECUROUTO	Tel No: Fax No: Cell No: E-mail: Signature:	
MC	SANI	SEIDI	PRODUTORA DO SAL	CANICO LENQUECUROUTO	Tel No: Fax No: Cell No: E-mail: Signature:	
MC	UE	KEITA	ESTUDANTE ARABE	CANICO LENQUECUROUTO	Tel No: Fax No: Cell No: E-mail: Signature:	

Titulo	Nome	Apelido	Organização (por favor, não use siglas)	Endereço	Contacto	
MC	Sadjo (Seco)	Keïta	ESTUdante ARABe	canico LENQUECUROUTO	Tel No:	
					Fax No:	
					Cell No:	
					E-mail:	
					Signature:	
MC	Mamadu	Seïde	ESTUdante	canico LENQUECUROUTO	Tel No:	
					Fax No:	
					Cell No:	
					E-mail:	
					Signature:	
MC	Malam	KEïTA	ESTUdante	canico LENQUECUROUTO	Tel No:	
					Fax No:	
					Cell No:	
					E-mail:	
					Signature:	
MC	Alassumane	KEïTa	ESTUdante ARABe	canico LENQUECUROUTO	Tel No:	
					Fax No:	
					Cell No:	
					E-mail:	
					Signature:	
MC	Almamo	Seïdi	ESTUdante ARABe	canico LENQUECUROUTO	Tel No:	
					Fax No:	
					Cell No:	
					E-mail:	
					Signature:	

Titulo	Nome	Apelido	Organização (por favor, não use siglas)	Endereço	Contacto	
MC	Mariana	Keita	PRODUCTORA da Sál	canico LENQUECUROUTO	Tel No:	
					Fax No:	
					Cell No:	
					E-mail:	
					Signature:	
MC	Tata	Dabó	ESTUDANTE	canico LENQUECUROUTO	Tel No:	
					Fax No:	
					Cell No:	
					E-mail:	
					Signature:	
MC	Maidin	Faii	PRODUCTORA da Sál	canico LENQUECUROUTO	Tel No:	
					Fax No:	
					Cell No:	
					E-mail:	
					Signature:	
MC	Ana	Keita	ESTUDANTE ARABE	canico LENQUECUROUTO	Tel No:	
					Fax No:	
					Cell No:	
					E-mail:	
					Signature:	

Titulo	Nome	Apelido	Organização (por favor, não use siglas)	Endereço	Contacto	
Mc	Dauda	Seidi	ESTudante	canico LEN@UEccurouto	Tel No:	
					Fax No:	
					Cell No:	
					E-mail:	
					Signature:	
Mc	Mamudu	Seidi	ESTudante	canico Lensuccurouto	Tel No:	
					Fax No:	
					Cell No:	
					E-mail:	
					Signature:	
					Tel No:	
					Fax No:	
					Cell No:	
					E-mail:	
					Signature:	
					Tel No:	
					Fax No:	
					Cell No:	
					E-mail:	
					Signature:	
					Tel No:	
					Fax No:	
					Cell No:	
					E-mail:	
					Signature:	

PROJECTO DE FOSFATO DE FARIM. AVALIAÇÃO DE IMPACTO SOCIAL E AMBIENTAL (ESIA) PARA GB MINERALS.

REGISTO DE PRESENÇAS

Reunião : CANICO TUMANÁ
Data : 11 / 12 / 13
Local : FARIM Project / only main

Titulo	Nome	Apelido	Organização (por favor, não use siglas)	Endereço	Contacto	
Mr	Carl	Nicholas	Golder Associates (UK)	1Alie street, London E1 8DE,UK	Tel No:	00447814143523
					Fax No:	00442074230941
					Cell No:	00447814143523
					E-mail:	CNicholas@golder.com
					Signature:	
	Cauto	Ducita	Lavrador	Canico Tumana	Tel No:	
					Fax No:	
					Cell No:	4609934
					E-mail:	
					Signature:	
	Salum	Sami	Lavrador	Canicó tumaná	Tel No:	
					Fax No:	
					Cell No:	
					E-mail:	
					Signature:	

Titulo	Nome	Apelido	Organização (por favor, não use siglas)	Endereço	Contacto	
	Lamine	Dabó	Lavrador	Camicó Tumanã	Tel No:	
					Fax No:	
					Cell No:	5131301
					E-mail:	
					Signature:	
	Malam	Tambadu	Lavrador	Saliguenha	Tel No:	
					Fax No:	
					Cell No:	5553035
					E-mail:	
					Signature:	
	Malam	Sani	Lavrador	Camicó Tumanã	Tel No:	
					Fax No:	
					Cell No:	
					E-mail:	
					Signature:	
	Amadi	Sani	Alfaiate	Camicó Tumanã	Tel No:	
					Fax No:	
					Cell No:	
					E-mail:	
					Signature:	
	Abulai	Someí	Carpinteiro	Camicó Tumanã	Tel No:	
					Fax No:	
					Cell No:	5307039
					E-mail:	
					Signature:	

Titulo	Nome	Apelido	Organização (por favor, não use siglas)	Endereço	Contacto	
	IBraima	Turé	Lavrador	Canicó Tumaná	Tel No:	
					Fax No:	
					Cell No:	5707036
					E-mail:	
					Signature:	
	Mamadú	Mendes	Fotografo	Sare Iba	Tel No:	
					Fax No:	
					Cell No:	599216/6639856
					E-mail:	
					Signature:	
	Mamadi	Turé	Lavrador	Sare Iorza	Tel No:	
					Fax No:	
					Cell No:	656 21/600 56 21
					E-mail:	
					Signature:	
	SECO	TURÉ	Lavrador	CANICÓ - TUMAINA	Tel No:	
					Fax No:	
					Cell No:	
					E-mail:	
					Signature:	
	FODÉ	TURÉ	Lavrador	CANICÓ TUMAINA	Tel No:	6316342
					Fax No:	
					Cell No:	
					E-mail:	
					Signature:	

Titulo	Nome	Apelido	Organização (por favor, não use siglas)	Endereço	Contacto	
	DJILABA	JNDJAI	Lavrador	SARA-IOBA	Tel No:	6123613
					Fax No:	
					Cell No:	
					E-mail:	
					Signature:	
	MALAM	TURÉ	Lavrador	CANICÓ-TUMANA	Tel No:	5590523
					Fax No:	
					Cell No:	
					E-mail:	
					Signature:	
	DJÉCA	KEITA	Lavrador	CANICÓ-TUMANIA	Tel No:	6225653
					Fax No:	
					Cell No:	
					E-mail:	
					Signature:	
	DJAL	DJAMBAM	Lavrador	CANICO TUMANA	Tel No:	
					Fax No:	
					Cell No:	
					E-mail:	
					Signature:	

Titulo	Nome	Apelido	Organização (por favor, não use siglas)	Endereço	Contacto	
	BUCAR	DABO	Lavrador	CANICÓ-TUMANA	Tel No:	
					Fax No:	
					Cell No:	
					E-mail:	
					Signature:	
	MALAM	TURÉ	Lavrador	SARA-IOBA	Tel No:	9100169
					Fax No:	
					Cell No:	
					E-mail:	
					Signature:	
	MUSTAFA	TURÉ	Lavrador	CANICÓ-TUMANA	Tel No:	5221319
					Fax No:	
					Cell No:	
					E-mail:	
					Signature:	
	MALAM	MANDJAM	Carpinteiro	CANICÓ-TUMANA	Tel No:	5238671
					Fax No:	
					Cell No:	
					E-mail:	
					Signature:	
	MUSSA	DJAMANCA	Carpinteiro	URBUE	Tel No:	
					Fax No:	
					Cell No:	
					E-mail:	
					Signature:	

Titulo	Nome	Apelido	Organização (por favor, não use siglas)	Endereço	Contacto	
	MAMADÚ	TURÉ	lavrador	CANICÓ-TUMANA	Tel No:	
					Fax No:	
					Cell No:	
					E-mail:	
					Signature:	
	MALAM	DJAMBAM	lavrador	CANICÓ-TUMANA	Tel No:	
					Fax No:	
					Cell No:	
					E-mail:	
					Signature:	
	DJUNCO	TURÉ	lavrador	CANICÓ-TUMANA	Tel No:	5443680
					Fax No:	
					Cell No:	
					E-mail:	
					Signature:	
	MALAM	DJAMBAM	carpinteiro	CANICÓ-TUMANA	Tel No:	
					Fax No:	
					Cell No:	
					E-mail:	
					Signature:	
	ALADJE	SONCO	carpinteiro	CANICO-TUMANA	Tel No:	9068754
					Fax No:	
					Cell No:	
					E-mail:	
					Signature:	

Titulo	Nome	Apelido	Organização (por favor, não use siglas)	Endereço	Contacto	
	TUNANE	TURÉ	Lavrador	CANICO - TUMANA	Tel No:	
					Fax No:	
					Cell No:	
					E-mail:	
					Signature:	
	MAMADÉ	TURÉ	Lavrador	CANICO - TUMANA	Tel No:	5487739
					Fax No:	
					Cell No:	
					E-mail:	
					Signature:	
	DJEBRIL	EMBALÓ	Lavrador	URGUÉ	Tel No:	6860610-5972825
					Fax No:	
					Cell No:	
					E-mail:	
					Signature:	
	MUSSA	EMBALÓ	Carpinteiro	URGUÉ	Tel No:	6630656/5568448
					Fax No:	
					Cell No:	
					E-mail:	
					Signature:	
	LAMINÉ	SANÉ	Lavrador	CANICÓ - TUMANA	Tel No:	
					Fax No:	
					Cell No:	
					E-mail:	
					Signature:	

Titulo	Nome	Apelido	Organização (por favor, não use siglas)	Endereço	Contacto	
	IBRAIMA	TURÉ	Lavrador	CANICÓ - TUMANA	Tel No:	5458570
					Fax No:	
					Cell No:	
					E-mail:	
					Signature:	
	CAMARÁ	FATI	Carpinteiro	CANICÓ-TUMANA	Tel No:	5934225
					Fax No:	
					Cell No:	
					E-mail:	
					Signature:	
	ISSUFE	DJANBAM	Carpinteiro	CANICÓ - TUMANA	Tel No:	
					Fax No:	
					Cell No:	
					E-mail:	
					Signature:	
	IORO	SANI	Lavrador	CANICÓ - TUMANA	Tel No:	
					Fax No:	
					Cell No:	
					E-mail:	
					Signature:	
	MALAM	DJAMANCA	Lavrador	DUNGAL	Tel No:	
					Fax No:	
					Cell No:	
					E-mail:	
					Signature:	

Titulo	Nome	Apelido	Organização (por favor, não use siglas)	Endereço	Contacto	
	FRANCISCO	EMBALÓ	Lavradora	URAUÉ	Tel No:	6670410
					Fax No:	
					Cell No:	
					E-mail:	
					Signature:	
Mr	Sadjo	Keita	Lavradora	Canico Tumana	Tel No:	
					Fax No:	
					Cell No:	
					E-mail:	
					Signature:	
Mr	Nene	Sonco	Lavradora	Canico Tumana	Tel No:	
					Fax No:	
					Cell No:	
					E-mail:	
					Signature:	
Mr	Binta	Turé	Lavradora	Canico Tumana	Tel No:	
					Fax No:	
					Cell No:	
					E-mail:	
					Signature:	

Titulo	Nome	Apelido	Organização (por favor, não use siglas)	Endereço	Contacto	
Mr	NHIMA	TURÉ	Lavradora	canico Tumana	Tel No:	
					Fax No:	
					Cell No:	
					E-mail:	
					Signature:	
Mr	Udé	DjanBam	Lavradona	canico Tumana	Tel No:	
					Fax No:	
					Cell No:	
					E-mail:	
					Signature:	
Mr	Maimuna	Baldé	Lavradona	URQUE	Tel No:	
					Fax No:	
					Cell No:	
					E-mail:	
					Signature:	
Mr	Cadi	Sonco	Lavradona	canico Tumana	Tel No:	
					Fax No:	
					Cell No:	
					E-mail:	
					Signature:	
Mr	Fanta	Baldé	Lavradona	URQUE	Tel No:	
					Fax No:	
					Cell No:	
					E-mail:	
					Signature:	

Titulo	Nome	Apelido	Organização (por favor, não use siglas)	Endereço	Contacto	
	Idrissa	Sanco		Caniço - Tumana	Tel No:	
					Fax No:	
					Cell No:	
					E-mail:	
					Signature:	
	Iaia	Sanco		Caniço - Tumana	Tel No:	
					Fax No:	
					Cell No:	5910868
					E-mail:	
					Signature:	
	Mamadu	Tuné		Caniço - Tumana	Tel No:	
					Fax No:	
					Cell No:	
					E-mail:	
					Signature:	
	Salifo	Tuné		Caniço - Tumana	Tel No:	
					Fax No:	
					Cell No:	00232 30929/6839260
					E-mail:	
					Signature:	
	Alié	Queita		Caniço - Tumana	Tel No:	
					Fax No:	
					Cell No:	
					E-mail:	
					Signature:	

Titulo	Nome	Apelido	Organização (por favor, não use siglas)	Endereço	Contacto	
	Malam	Turé		Canicó - Tumaná	Tel No:	
					Fax No:	
					Cell No:	5797805
					E-mail:	
					Signature:	
	Catrina	Jeiti		Canicó - Tumaná	Tel No:	
					Fax No:	
					Cell No:	
					E-mail:	
					Signature:	
	Bacar	Turé		Canico - Tumaná	Tel No:	
					Fax No:	
					Cell No:	1823036
					E-mail:	
					Signature:	
	Ussumane	Sanó		Canicó - Tumaná	Tel No:	
					Fax No:	
					Cell No:	
					E-mail:	
					Signature:	
	Lamine	Quelta		Canicó - Tumaná	Tel No:	
					Fax No:	
					Cell No:	
					E-mail:	
					Signature:	

Titulo	Nome	Apelido	Organização (por favor, não use siglas)	Endereço	Contacto	
	Mohamado	Turé		Camicó - Tumaná	Tel No:	
					Fax No:	
					Cell No:	
					E-mail:	
					Signature:	
Feminino	Joslano	Canaé		Urqui	Tel No:	
					Fax No:	
					Cell No:	
					E-mail:	
					Signature:	
Feminina	Fili	Canaé		Urqui	Tel No:	
					Fax No:	
					Cell No:	
					E-mail:	
					Signature:	
Feminina	Pramota	Manajam		Camicó - Tumaná	Tel No:	
					Fax No:	
					Cell No:	
					E-mail:	
					Signature:	
Feminina	Duquiata	Embalo		Urqui	Tel No:	
					Fax No:	
					Cell No:	
					E-mail:	
					Signature:	

Titulo	Nome	Apelido	Organização (por favor, não use siglas)	Endereço	Contacto	
	Hadja	Queita		Comissão - Tumana	Tel No:	
					Fax No:	
					Cell No:	
					E-mail:	
					Signature:	
					Tel No:	
					Fax No:	
					Cell No:	
					E-mail:	
					Signature:	
					Tel No:	
					Fax No:	
					Cell No:	
					E-mail:	
					Signature:	
					Tel No:	
					Fax No:	
					Cell No:	
					E-mail:	
					Signature:	

Titulo	Nome	Apelido	Organização (por favor, não use siglas)	Endereço	Contacto	
	Mariama	Queita	Lavradora	Cânico Tumana	Tel No:	
					Fax No:	
					Cell No:	
					E-mail:	
					Signature:	
					Tel No:	
					Fax No:	
					Cell No:	
					E-mail:	
					Signature:	
					Tel No:	
					Fax No:	
					Cell No:	
					E-mail:	
					Signature:	
					Tel No:	
					Fax No:	
					Cell No:	
					E-mail:	
					Signature:	
					Tel No:	
					Fax No:	
					Cell No:	
					E-mail:	
					Signature:	

Titulo	Nome	Apelido	Organização (por favor, não use siglas)	Endereço	Contacto	
Mr	Lamine	Sanè	Estudante	Canico Turmana	Tel No:	
					Fax No:	
					Cell No:	
					E-mail:	
					Signature:	
Mr	Bacar	Sanè	Estudante	Canico Turmana	Tel No:	
					Fax No:	
					Cell No:	
					E-mail:	
					Signature:	
Mr	Wie	Turé	Lavrador	Canico Turmana	Tel No:	
					Fax No:	
					Cell No:	
					E-mail:	
					Signature:	
Mr	Suaibo	Turé	Estudante	Canico Turmana	Tel No:	
					Fax No:	
					Cell No:	
					E-mail:	
					Signature:	
Mr	Malam	Sanè	Estudante	Canico Turmana	Tel No:	
					Fax No:	
					Cell No:	
					E-mail:	
					Signature:	

Titulo	Nome	Apelido	Organização (por favor, não use siglas)	Endereço	Contacto	
	Malam	Keita	Lavrador	Banico Tumana	Tel No:	
					Fax No:	
					Cell No:	
					E-mail:	
					Signature:	
	Seco	Turé	Lavrador	11	Tel No:	
					Fax No:	
					Cell No:	6937735
					E-mail:	
					Signature:	
	Idrissa	Djamban	Lavrador	11	Tel No:	
					Fax No:	
					Cell No:	
					E-mail:	
					Signature:	
	Iaia	Fati	Lavrador	11	Tel No:	
					Fax No:	
					Cell No:	
					E-mail:	
					Signature:	
	Usumane	Seidi	Lavrador	11	Tel No:	
					Fax No:	
					Cell No:	9240109
					E-mail:	
					Signature:	

Titulo	Nome	Apelido	Organização (por favor, não use siglas)	Endereço	Contacto	
	Bamba	Turé	Lavrador		Tel No:	
					Fax No:	
					Cell No:	5402092
					E-mail:	
					Signature:	
	WDumani	DJamban	Lavrador		Tel No:	
					Fax No:	
					Cell No:	6588459
					E-mail:	
					Signature:	
	Malambá	Turé	Lavrador		Tel No:	
					Fax No:	
					Cell No:	
					E-mail:	
					Signature:	
	IBraima	Sani	Lavrador		Tel No:	
					Fax No:	
					Cell No:	
					E-mail:	
					Signature:	
	Lamine	Sanco	Lavrador		Tel No:	
					Fax No:	
					Cell No:	9068754
					E-mail:	
					Signature:	

Titulo	Nome	Apelido	Organização (por favor, não use siglas)	Endereço	Contacto	
	Wil	Turé	Estudante	Canico Tumana	Tel No:	
					Fax No:	
					Cell No:	
					E-mail:	
					Signature:	
	Quebra	Sani	Estudante	Canico Tumana	Tel No:	
					Fax No:	
					Cell No:	
					E-mail:	
					Signature:	
	Sulema-ni	Sonco	Lavrador	Canico Tumana	Tel No:	
					Fax No:	
					Cell No:	
					E-mail:	
					Signature:	
	Samba	Sani	Lavrador	Canico Tumana	Tel No:	
					Fax No:	
					Cell No:	
					E-mail:	
					Signature:	
	Iaia	Sonco	Estudante	Canico Tumana	Tel No:	
					Fax No:	
					Cell No:	
					E-mail:	
					Signature:	

Titulo	Nome	Apelido	Organização (por favor, não use siglas)	Endereço	Contacto	
	Iaia	Sani	Estudante	Canico Tumana	Tel No: Fax No: Cell No: E-mail: Signature:	
	Muhamadu	Sani	Estudante	Canico Tumana	Tel No: Fax No: Cell No: E-mail: Signature:	
	Alfusene	Sonko	Estudante	Canico Tumana	Tel No: Fax No: Cell No: E-mail: Signature:	
	Mamadu	Djanko	lavrador	Canico Tumana	Tel No: Fax No: Cell No: E-mail: Signature:	

Titulo	Nome	Apelido	Organização (por favor, não use siglas)	Endereço	Contacto	
	Cussa	Turé	Lavrador	Canico Tumana	Tel No:	
					Fax No:	
					Cell No:	
					E-mail:	
					Signature:	
	Abudo	Sonco	Lavrador	Canico Tumana	Tel No:	
					Fax No:	
					Cell No:	
					E-mail:	
					Signature:	
	Fodamara	Keita	Estudante	Canico Tumana	Tel No:	
					Fax No:	
					Cell No:	
					E-mail:	
					Signature:	
	Malam	Sani	Estudante	Canico Tumana	Tel No:	
					Fax No:	
					Cell No:	
					E-mail:	
					Signature:	
	Bakar	Sani	Carpintiro	Canico Tumana	Tel No:	
					Fax No:	
					Cell No:	
					E-mail:	
					Signature:	

Titulo	Nome	Apelido	Organização (por favor, não use siglas)	Endereço	Contacto	
	Abudo	Sani	Lavrador	Canico Tumana	Tel No:	
					Fax No:	
					Cell No:	
					E-mail:	
					Signature:	
	Submaila	Sani	Pintor	Canico Tumana	Tel No:	
					Fax No:	
					Cell No:	5746067
					E-mail:	
					Signature:	
	Djambá	Djambam	Lavrador	Canico Tumana	Tel No:	
					Fax No:	
					Cell No:	
					E-mail:	
					Signature:	
	Malam	Turé	Lavrador	Canico Tumana	Tel No:	
					Fax No:	
					Cell No:	
					E-mail:	
					Signature:	

Titulo	Nome	Apelido	Organização (por favor, não use siglas)	Endereço	Contacto	
	Aruna	Djambam	Alfaiate	Canico Turmana	Tel No:	
					Fax No:	
					Cell No:	
					E-mail:	
					Signature:	
	Iaia	Djambam	Lavrador	Canico Turmana	Tel No:	
					Fax No:	
					Cell No:	
					E-mail:	
					Signature:	
	Califa	Djambam	Lavrador	Canico Turmana	Tel No:	
					Fax No:	
					Cell No:	
					E-mail:	
					Signature:	
	Suleimane	Djambam	Lavradora	Canico Turmana	Tel No:	
					Fax No:	
					Cell No:	
					E-mail:	
					Signature:	
	Sadjo	Turé	Lavrador	Canico Turmana	Tel No:	
					Fax No:	
					Cell No:	
					E-mail:	
					Signature:	

Titulo	Nome	Apelido	Organização (por favor, não use siglas)	Endereço	Contacto	
	Abubacar	Djambam	lavrador	Canico Tumana	Tel No:	
					Fax No:	
					Cell No:	
					E-mail:	
					Signature:	
	Sanabá	Djambam	lavrador	Canico Tumana	Tel No:	
					Fax No:	
					Cell No:	
					E-mail:	
					Signature:	
	Idrissa	Turé	lavrador	Canico Tumana	Tel No:	
					Fax No:	
					Cell No:	
					E-mail:	
					Signature:	
	Lamine	Djambam	lavrador	Canico Tumana	Tel No:	
					Fax No:	
					Cell No:	
					E-mail:	
					Signature:	
	Bacar I	Turé	lavrador	Canico Tumana	Tel No:	
					Fax No:	
					Cell No:	
					E-mail:	
					Signature:	

Titulo	Nome	Apelido	Organização (por favor, não use siglas)	Endereço	Contacto	
	Abudo	Djambam	Lavrador	Canico Tumana	Tel No:	
					Fax No:	
					Cell No:	
					E-mail:	
					Signature:	
	Mustafa	Turé	Lavrador	Canico Tumana	Tel No:	
					Fax No:	
					Cell No:	
					E-mail:	
					Signature:	
	Bacar II	Turé	Lavrador	Canico Tumana	Tel No:	
					Fax No:	
					Cell No:	
					E-mail:	
					Signature:	
	Lamine	Turé	Lavrador	Canico Tumana	Tel No:	
					Fax No:	
					Cell No:	
					E-mail:	
					Signature:	
	Malam	Turé	Lavrador	Canico Tumana	Tel No:	
					Fax No:	
					Cell No:	
					E-mail:	
					Signature:	

Titulo	Nome	Apelido	Organização (por favor, não use siglas)	Endereço	Contacto	
	Malam	Djambam	Lavrador	Canico Tumana	Tel No:	
					Fax No:	
					Cell No:	
					E-mail:	
					Signature:	
	Sene	Turé	Lavrador	Canico Tumana	Tel No:	
					Fax No:	
					Cell No:	
					E-mail:	
					Signature:	
	Sana	Turé	Lavrador	Canico Tumana	Tel No:	
					Fax No:	
					Cell No:	
					E-mail:	
					Signature:	
	Malam Se-lese	Turé	Lavrador	Canico Tumana	Tel No:	
					Fax No:	
					Cell No:	
					E-mail:	
					Signature:	
	Malam	Turé	Lavrador	Canico Tumana	Tel No:	
					Fax No:	
					Cell No:	
					E-mail:	
					Signature:	

Titulo	Nome	Apelido	Organização (por favor, não use siglas)	Endereço	Contacto	
	Mamadu Dabo	Dabo	Cânico	Cânico	Tel No:	68392 99
					Fax No:	
					Cell No:	
					E-mail:	
					Signature:	
	Mussa	Soneo	—	Canico Tumana	Tel No:	
					Fax No:	
					Cell No:	
					E-mail:	
					Signature:	
	Cissé	Turé		Canicó Tumana	Tel No:	
					Fax No:	
					Cell No:	
					E-mail:	
					Signature:	
	Sirá	Sani		Canico Tumana	Tel No:	
					Fax No:	
					Cell No:	
					E-mail:	
					Signature:	
	Fatu	Turé		Canico Tumana	Tel No:	
					Fax No:	
					Cell No:	
					E-mail:	
					Signature:	

Titulo	Nome	Apelido	Organização (por favor, não use siglas)	Endereço	Contacto	
Mr	Malam	TURÉ	Lavrador	canico Tumana	Tel No:	
					Fax No:	
					Cell No:	
					E-mail:	
					Signature:	
Mr	ABudo	Keita	calpinteiro	canico Tumana	Tel No:	
					Fax No:	
					Cell No:	622 5653
					E-mail:	
					Signature:	
Mr	Seco	TURÉ	Lavrador	canico Tumana	Tel No:	
					Fax No:	
					Cell No:	
					E-mail:	
					Signature:	
Mr	Samba	SONCO	Calpinteiro	canico Tumana	Tel No:	
					Fax No:	
					Cell No:	
					E-mail:	
					Signature:	
Mr	Seco	TURÉ	Lavrador	canico Tumana	Tel No:	
					Fax No:	
					Cell No:	
					E-mail:	
					Signature:	

Titulo	Nome	Apelido	Organização (por favor, não use siglas)	Endereço	Contacto	
Mr	Malam	TURÉ	Mecanico	canico Tumana	Tel No:	
					Fax No:	
					Cell No:	5590907
					E-mail:	
					Signature:	
Mr	Sene	TURÉ	Lavrador	canico Tumana	Tel No:	
					Fax No:	
					Cell No:	6402025
					E-mail:	
					Signature:	
Mr	Mamadu	TURÉ	calpinteiro	canico Tumana	Tel No:	
					Fax No:	
					Cell No:	
					E-mail:	
					Signature:	
Mr	Demba	TURÉ	ESTudante	canico Tumana	Tel No:	
					Fax No:	
					Cell No:	
					E-mail:	
					Signature:	
Mr	Mussa	TURÉ	ESTudante	canico Tumana	Tel No:	
					Fax No:	
					Cell No:	
					E-mail:	
					Signature:	

Titulo	Nome	Apelido	Organização (por favor, não use siglas)	Endereço	Contacto	
Mr	Mussa	Turé	Lavrador	canico Tumana	Tel No:	
					Fax No:	
					Cell No:	
					E-mail:	
					Signature:	
Mr	Mamudo	Soncó	calpinteiro	canico Tumana	Tel No:	
					Fax No:	
					Cell No:	
					E-mail:	
					Signature:	
Mr	Bucar	Sonco	calpinteiro	canico Tumana	Tel No:	
					Fax No:	
					Cell No:	
					E-mail:	
					Signature:	
Mr	Malam	Seidi	Lavrador	canico Tumana	Tel No:	
					Fax No:	
					Cell No:	
					E-mail:	
					Signature:	
Mr	Seco	Keita	calpinteiro	canico Tumana	Tel No:	
					Fax No:	
					Cell No:	5910778
					E-mail:	
					Signature:	

PROJECTO DE FOSFATO DE FARIM. AVALIAÇÃO DE IMPACTO SOCIAL E AMBIENTAL (ESIA) PARA GB MINERALS.

REGISTO DE PRESENÇAS

Reunião : CANICO, TUMANA, ORQUE, SARE – IODA
Data : 11 DECEMBER 2013
Local : COMMUNITY MEETING AREA

Titulo	Nome	Apelido	Organização (por favor, não use siglas)	Endereço	Contacto	
Mr	Carl	Nicholas	Golder Associates (UK)	1Alie street, London E1 8DE,UK	Tel No:	00447814143523
					Fax No:	00442074230941
					Cell No:	00447814143523
					E-mail:	CNicholas@golder.com
					Signature:	
Mr	Fatumaia	Mandjam	Lavradora	Canico TUMANA	Tel No:	
					Fax No:	
					Cell No:	
					E-mail:	
					Signature:	
Mr	SONA	Darame	Lavradora	Canico Tumana	Tel No:	
					Fax No:	
					Cell No:	
					E-mail:	
					Signature:	

Titulo	Nome	Apelido	Organização (por favor, não use siglas)	Endereço	Contacto	
Mr	Cadi	Mandjam	Lavradora	Canico Tumana	Tel No:	
					Fax No:	
					Cell No:	
					E-mail:	
					Signature:	
Mr	AMINTA	Fati	Lavradora	Canico Tumana	Tel No:	
					Fax No:	
					Cell No:	
					E-mail:	
					Signature:	
Mr	BINTA	TURÉ	Lavradora	Canico Tumana	Tel No:	
					Fax No:	
					Cell No:	
					E-mail:	
					Signature:	
Mr	BINTA	Sani	Lavradora	Canico Tumana	Tel No:	
					Fax No:	
					Cell No:	
					E-mail:	
					Signature:	
Mr	Mai	Dabó	Lavradora	Canico Tumana	Tel No:	
					Fax No:	
					Cell No:	
					E-mail:	
					Signature:	

Titulo	Nome	Apelido	Organização (por favor, não use siglas)	Endereço	Contacto	
Mr	Safiatu	Turé	Lavradora	canico Tumana	Tel No:	
					Fax No:	
					Cell No:	
					E-mail:	
					Signature:	
Mr	Cadi	Wacá	Lavradora	canico Tumana	Tel No:	
					Fax No:	
					Cell No:	
					E-mail:	
					Signature:	
Mr	Fili	TURÉ	Lavradora	canico Tumana ~~Tem~~	Tel No:	
					Fax No:	
					Cell No:	
					E-mail:	
					Signature:	
Mr	Mai	TURÉ	Lavradora	canico Tumana	Tel No:	
					Fax No:	
					Cell No:	
					E-mail:	
					Signature:	
Mr	Sali	TURÉ	Lavradora	canico Tumana	Tel No:	
					Fax No:	
					Cell No:	
					E-mail:	
					Signature:	

Titulo	Nome	Apelido	Organização (por favor, não use siglas)	Endereço	Contacto	
Mr	Sadjo	turé	Lavradora	canico Tumana	Tel No:	
					Fax No:	
					Cell No:	
					E-mail:	
					Signature:	
Mr	Aua	Keita	Lavradora	canico Tumana	Tel No:	
					Fax No:	
					Cell No:	
					E-mail:	
					Signature:	
Mr	N'canhá	TURÉ	Lavradona	canico Tumana	Tel No:	
					Fax No:	
					Cell No:	
					E-mail:	
					Signature:	
Mr	Binta	turé	Lavradona	canico Tumana	Tel No:	
					Fax No:	
					Cell No:	
					E-mail:	
					Signature:	
Mr	Aua	Turé	Lavradona	canico Tumana	Tel No:	
					Fax No:	
					Cell No:	
					E-mail:	
					Signature:	

Titulo	Nome	Apelido	Organização (por favor, não use siglas)	Endereço	Contacto	
Mr	Aissatu	Mandjam	Lavradora	canico Tumana	Tel No:	
					Fax No:	
					Cell No:	
					E-mail:	
					Signature:	
Mr	Binio	Djanbam	Lavradora	canico Tumana	Tel No:	
					Fax No:	
					Cell No:	
					E-mail:	
					Signature:	
Mr	Sanu	turé	Lavradora	canico Tumana	Tel No:	
					Fax No:	
					Cell No:	
					E-mail:	
					Signature:	
Mr	cadi	Sisse	Lavradora	canico Tumana	Tel No:	
					Fax No:	
					Cell No:	
					E-mail:	
					Signature:	
Mr	Fatu	Turé	Lavradora	canico Tumana	Tel No:	
					Fax No:	
					Cell No:	
					E-mail:	
					Signature:	

Titulo	Nome	Apelido	Organização (por favor, não use siglas)	Endereço	Contacto	
Mr	Mariana	Sani	Lavradora	canico Tumana	Tel No:	
					Fax No:	
					Cell No:	
					E-mail:	
					Signature:	
Mr	Candá	Djanbam	Lavradona	canico Tumana	Tel No:	
					Fax No:	
					Cell No:	
					E-mail:	
					Signature:	
Mr	Djeneba	Sisse	Lavradona	Canico Tumana	Tel No:	
					Fax No:	
					Cell No:	
					E-mail:	
					Signature:	
Mr	Sali	Keita	Lavradona	canico Tumana	Tel No:	
					Fax No:	
					Cell No:	
					E-mail:	
					Signature:	

Titulo	Nome	Apelido	Organização (por favor, não use siglas)	Endereço	Contacto	
Mr	Cosa	Sanó	Lavradora	canico Tumana	Tel No:	
					Fax No:	
					Cell No:	
					E-mail:	
					Signature:	
Mr	Aua	Keita	Lavradora	canico Tumana	Tel No:	
					Fax No:	
					Cell No:	
					E-mail:	
					Signature:	
Mr	Bana	Tuné	Lavradora	canico Tumana	Tel No:	
					Fax No:	
					Cell No:	
					E-mail:	
					Signature:	
Mr	Adama	Damfá	Lavradora	canico Tumana	Tel No:	
					Fax No:	
					Cell No:	
					E-mail:	
					Signature:	
Mr	Sali	Darame	Lavradora	canico Tumana	Tel No:	
					Fax No:	
					Cell No:	
					E-mail:	
					Signature:	

Titulo	Nome	Apelido	Organização (por favor, não use siglas)	Endereço	Contacto	
Mr	Mariatu	TURÉ	Lavradora	canico Tumana	Tel No:	
					Fax No:	
					Cell No:	
					E-mail:	
					Signature:	
Mr	Mai	Seidi	Lavradora	canico Tumana	Tel No:	
					Fax No:	
					Cell No:	
					E-mail:	
					Signature:	
Mr	Binta	Dabó	Lavradora	canico Tumana	Tel No:	
					Fax No:	
					Cell No:	
					E-mail:	
					Signature:	
Mr	Binta	Turé	Lavradora	canico Tumana	Tel No:	
					Fax No:	
					Cell No:	
					E-mail:	
					Signature:	
Mr	Sene	SONCO	Lavradora	canico Tumana	Tel No:	
					Fax No:	
					Cell No:	
					E-mail:	
					Signature:	

Titulo	Nome	Apelido	Organização (por favor, não use siglas)	Endereço	Contacto	
Mr	Mai	Mandjan	Lavradora	canico Tumana	Tel No:	
					Fax No:	
					Cell No:	
					E-mail:	
					Signature:	
Mr	Tania	Keita	Lavradora	canico Tumana	Tel No:	
					Fax No:	
					Cell No:	
					E-mail:	
					Signature:	
Mr	Aramaia	Djanbam	Lavradora	canico Tumana	Tel No:	
					Fax No:	
					Cell No:	
					E-mail:	
					Signature:	
Mr	Binta	Turé	Lavradora	canico Tumana	Tel No:	
					Fax No:	
					Cell No:	
					E-mail:	
					Signature:	
Mr	Sira	Turé	Lavradora	canico Tumana	Tel No:	
					Fax No:	
					Cell No:	
					E-mail:	
					Signature:	

Titulo	Nome	Apelido	Organização (por favor, não use siglas)	Endereço	Contacto	
Mr	Cadi	TURÉ	Lavradora	canico Tumana	Tel No:	
					Fax No:	
					Cell No:	
					E-mail:	
					Signature:	
Mr	Binta	TURÉ	Lavradora	canico Tumana	Tel No:	
					Fax No:	
					Cell No:	
					E-mail:	
					Signature:	
Mr	Sira	Daname	Lavradora	canico Tumana	Tel No:	
					Fax No:	
					Cell No:	
					E-mail:	
					Signature:	
Mr	Binta	Mandjam	Lavradora	canico Tumana	Tel No:	
					Fax No:	
					Cell No:	
					E-mail:	
					Signature:	
Mr	Taco	TURÉ	Lavradora	canico Tumana	Tel No:	
					Fax No:	
					Cell No:	
					E-mail:	
					Signature:	

Titulo	Nome	Apelido	Organização (por favor, não use siglas)	Endereço	Contacto	
Mr	SIRA	TURÉ	Lavradora	canico Tumana	Tel No:	
					Fax No:	
					Cell No:	
					E-mail:	
					Signature:	
Mr	Faumaia	Djanbam	Lavradora	canico Tumana	Tel No:	
					Fax No:	
					Cell No:	
					E-mail:	
					Signature:	
Mr	Fania	Sama	Lavradora	canico Tumana	Tel No:	
					Fax No:	
					Cell No:	
					E-mail:	
					Signature:	
Mr	Maniatu	Djanbam	Lavradora	canico Tumana	Tel No:	
					Fax No:	
					Cell No:	
					E-mail:	
					Signature:	

Titulo	Nome	Apelido	Organização (por favor, não use siglas)	Endereço	Contacto	
Mr	cumba	Daname	Lavradora	Canico Tumana	Tel No:	
					Fax No:	
					Cell No:	
					E-mail:	
					Signature:	
Mr	Aissatu	TURÉ	Lavradora	Canico Tumana	Tel No:	
					Fax No:	
					Cell No:	
					E-mail:	
					Signature:	
Mr	Mana	Sonco	Lavradora	Canico Tumana	Tel No:	
					Fax No:	
					Cell No:	
					E-mail:	
					Signature:	
Mr	Djide	TURÉ	Lavradora	Canico Tumana	Tel No:	
					Fax No:	
					Cell No:	
					E-mail:	
					Signature:	
Mr	AMINA	TURÉ	Lavradora	Canico Tumana	Tel No:	
					Fax No:	
					Cell No:	
					E-mail:	
					Signature:	

Titulo	Nome	Apelido	Organização (por favor, não use siglas)	Endereço	Contacto	
Mr	Aua	TURÉ	Lavradora	Canico Tumana	Tel No: Fax No: Cell No: E-mail: Signature:	
Mr	Djana	Djarame	Lavradora	Canico Tumana	Tel No: Fax No: Cell No: E-mail: Signature:	
Mr	DjeNeba	TURÉ	Lavradora	Canico Tumana	Tel No: Fax No: Cell No: E-mail: Signature:	
Mr	Fatumaia	TURÉ	Lavradora	Canico Tumana	Tel No: Fax No: Cell No: E-mail: Signature:	
Mr	Aissatu	Djanbam	Lavradora	canico Tumana	Tel No: Fax No: Cell No: E-mail: Signature:	

Titulo	Nome	Apelido	Organização (por favor, não use siglas)	Endereço	Contacto	
Mr	Canda	Sonco	Lavradora	Canico Tumana	Tel No:	
					Fax No:	
					Cell No:	
					E-mail:	
					Signature:	
Mr	MUSQUEBa	SISSe	Lavradona	Canico Tumana	Tel No:	
					Fax No:	
					Cell No:	
					E-mail:	
					Signature:	
Mr	Satu	TURÉ	Lavradona	Canico Tumana	Tel No:	
					Fax No:	
					Cell No:	
					E-mail:	
					Signature:	
Mr	Binta	TURÉ	Lavradona	Canico Tumana	Tel No:	
					Fax No:	
					Cell No:	
					E-mail:	
					Signature:	
Mr	Mariama	TURÉ	Lavradona	Canico Tumana	Tel No:	
					Fax No:	
					Cell No:	
					E-mail:	
					Signature:	

Titulo	Nome	Apelido	Organização (por favor, não use siglas)	Endereço	Contacto	
Mr	Binta	Sani	Lavradona	Canico Tumana	Tel No:	
					Fax No:	
					Cell No:	
					E-mail:	
					Signature:	
Mr	Mariama	TURÉ	Lavradona	Canico Tumana	Tel No:	
					Fax No:	
					Cell No:	
					E-mail:	
					Signature:	
Mr	Binta	Sani	Lavradona	Canico Tumana	Tel No:	
					Fax No:	
					Cell No:	
					E-mail:	
					Signature:	
Mr	Aua	Sani	Lavradona	Canico Tumana	Tel No:	
					Fax No:	
					Cell No:	
					E-mail:	
					Signature:	
Mr	Alima	Sani	Lavradona	canico Tumana	Tel No:	
					Fax No:	
					Cell No:	
					E-mail:	
					Signature:	

Titulo	Nome	Apelido	Organização (por favor, não use siglas)	Endereço	Contacto	
Mr	Iama	TURÉ	Lavradora	Canico Tumana	Tel No:	
					Fax No:	
					Cell No:	
					E-mail:	
					Signature:	
Mr	Mama	Sani	Lavradora	Canico Tumana	Tel No:	
					Fax No:	
					Cell No:	
					E-mail:	
					Signature:	
Mr	Alima	TURÉ	Lavradora	Canico Tumana	Tel No:	
					Fax No:	
					Cell No:	
					E-mail:	
					Signature:	
Mr	Binta	Djanbam	Lavradora	Canico Tumana	Tel No:	
					Fax No:	
					Cell No:	
					E-mail:	
					Signature:	

Titulo	Nome	Apelido	Organização (por favor, não use siglas)	Endereço	Contacto	
Mr	Ude	Seidi	Lavradora	canico Tumana	Tel No:	
					Fax No:	
					Cell No:	
					E-mail:	
					Signature:	
Mr	AMINA	Djanbam	Lavradora	canico Tumana	Tel No:	
					Fax No:	
					Cell No:	
					E-mail:	
					Signature:	
Mr	Binta	Djanbam	Lavradora	canico Tumana	Tel No:	
					Fax No:	
					Cell No:	
					E-mail:	
					Signature:	
Mr	Tombom	TURÉ	Lavradora	canico Tumana	Tel No:	
					Fax No:	
					Cell No:	
					E-mail:	
					Signature:	
Mr	ABUDO	Keita	Lavradora	canico Tumana	Tel No:	
					Fax No:	
					Cell No:	
					E-mail:	
					Signature:	

Titulo	Nome	Apelido	Organização (por favor, não use siglas)	Endereço	Contacto	
Mr	DjeNeBa	Mandjam	Lavradora	canico Tumana	Tel No:	
					Fax No:	
					Cell No:	
					E-mail:	
					Signature:	
Mr	TonBom	Seidi	Lavradora	canico Tumana	Tel No:	
					Fax No:	
					Cell No:	
					E-mail:	
					Signature:	
Mr	Cadi	Dabo	Lavradora	canico Tumana	Tel No:	
					Fax No:	
					Cell No:	
					E-mail:	
					Signature:	
Mr	Sene	Sani	Lavradora	canico Tumana	Tel No:	
					Fax No:	
					Cell No:	
					E-mail:	
					Signature:	
Mr	Tida	Turé	Lavradora	canico Tumana	Tel No:	
					Fax No:	
					Cell No:	
					E-mail:	
					Signature:	

Titulo	Nome	Apelido	Organização (por favor, não use siglas)	Endereço	Contacto	
Mr	Maî	Sonco	Lavradora	canico Tumana	Tel No:	
					Fax No:	
					Cell No:	
					E-mail:	
					Signature:	
Mr	Udé	TURÉ	Lavradora	canico Tumana	Tel No:	
					Fax No:	
					Cell No:	
					E-mail:	
					Signature:	
Mr	Mariama	turé	Lavradora	canico Tumana	Tel No:	
					Fax No:	
					Cell No:	
					E-mail:	
					Signature:	
Mr	Aïssatu	Keïta	Lavradora	canico Tumana	Tel No:	
					Fax No:	
					Cell No:	
					E-mail:	
					Signature:	

Titulo	Nome	Apelido	Organização (por favor, não use siglas)	Endereço	Contacto	
Mr	Satiãu	candé	Lavradora	URQUE	Tel No:	
					Fax No:	
					Cell No:	
					E-mail:	
					Signature:	
Mr	Amadu	EMBaló	Lavradora	URQUE	Tel No:	
					Fax No:	
					Cell No:	
					E-mail:	
					Signature:	
Mr	ARamãü-lai	candé	Lavradora	URQUE	Tel No:	
					Fax No:	
					Cell No:	
					E-mail:	
					Signature:	
Mr	cumba	Mandjam	Lavradora	canico Tumana	Tel No:	
					Fax No:	
					Cell No:	
					E-mail:	
					Signature:	
Mr	Manan	Sonco	Lavradora	canico Tumana	Tel No:	
					Fax No:	
					Cell No:	
					E-mail:	
					Signature:	

PROJECTO DE FOSFATO DE FARIM. AVALIAÇÃO DE IMPACTO SOCIAL E AMBIENTAL (ESIA) PARA GB MINERALS.

REGISTO DE PRESENÇAS

Reunião : GB MINERALS PROJECT OFFICERS
Data : 8 DECEMBER 2013
Local : FARIM OFFICE

Titulo	Nome	Apelido	Organização (por favor, não use siglas)	Endereço	Contacto	
Mr	Carl	Nicholas	Golder Associates (UK)	1Alie street, London E1 8DE,UK	Tel No:	00447814143523
					Fax No:	00442074230941
					Cell No:	00447814143523
					E-mail:	CNicholas@golder.com
					Signature:	
	Rigoberto	Cantyssan	GB Minerals	Farim office	Tel No:	590 11 30
					Fax No:	
					Cell No:	
					E-mail:	rigocantussan@yahoo.fr
					Signature:	
	Bacar	Baio	GB Minerals	Laboratory Farim office	Tel No:	5929006
					Fax No:	
					Cell No:	6629006
					E-mail:	dembabaio@hotmail.com
					Signature:	

Titulo	Nome	Apelido	Organização (por favor, não use siglas)	Endereço	Contacto	
	Hadje	Baio	GB Minerais	Sofrema	Tel No:	66370361/53233147
					Fax No:	
					Cell No:	
					E-mail:	Baioladje@Hotmail.com
					Signature:	
					Tel No:	663-4143/5527121
					Fax No:	
					Cell No:	
					E-mail:	
	Ussumane	Sanhá	GB. Minerais	As. Boot	Signature:	Badjamba@Hotmail.c
					Tel No:	52937961
	Mete Mane	Camé	GB Minerais	Sofrema, bantanjan	Fax No:	
					Cell No:	
					E-mail:	quebozo@hotmail.com
					Signature:	Mete Camé
					Tel No:	6667108
	Victor	Mateus	GB Mineral		Fax No:	
					Cell No:	
					E-mail:	
					Signature:	V. Mateus
					Tel No:	672961 5/580.3975
	Ubon Nhaga	Nabalin	GB. Minerais	Praça Sofrema	Fax No:	
					Cell No:	
					E-mail:	Nhagababa@Yahoo.fr
					Signature:	Ubon Nhaga

Titulo	Nome	Apelido	Organização (por favor, não use siglas)	Endereço	Contacto	
	Mamadu Djalo	Djalo	G.B.M	Condutor auto DRIVE - MAN	Tel No:	527 00 13/6630648
					Fax No:	
					Cell No:	
					E-mail:	
					Signature:	
	José Gibril Nhamadjo	Nhamadjo	G/BM	Serviços de Manutenção mecânico	Tel No:	5708285/6617192
					Fax No:	
					Cell No:	
					E-mail:	Djibi20@hotmail.com
					Signature:	
	Martin M. Aizan	Aizan	G.B.Minerals	Translation and Logistics	Tel No:	6625747/5494118
					Fax No:	
					Cell No:	
					E-mail:	martinaizan@hotmail.com
					Signature:	
					Tel No:	
					Fax No:	
					Cell No:	
					E-mail:	
					Signature:	

PROJECTO DE FOSFATO DE FARIM. AVALIAÇÃO DE IMPACTO SOCIAL E AMBIENTAL (ESIA) PARA GB MINERALS.

21

REGISTO DE PRESENÇAS

Reunião : PONTA ZECA
Data : 11/12/2013
Local :

Titulo	Nome	Apelido	Organização (por favor, não use siglas)	Endereço	Contacto	
Mr	Carl	Nicholas	Golder Associates (UK)	1Alie street, London E1 8DE,UK	Tel No:	00447814143523
					Fax No:	00442074230941
					Cell No:	00447814143523
					E-mail:	CNicholas@golder.com
					Signature:	
Mr	Quintino	Safá	Estudante	Salquenhe (~~Ponta~~) Porto	Tel No:	
					Fax No:	
					Cell No:	608 0094
					E-mail:	
					Signature:	
Mr	Lalo	Safá	Agricultor	Salquenhe Porto	Tel No:	
					Fax No:	
					Cell No:	
					E-mail:	
					Signature:	

Titulo	Nome	Apelido	Organização (por favor, não use siglas)	Endereço	Contacto	
Mr	QUINHAU	Datá	PROFESSOR	SALQUENHE PORTO	Tel No:	
					Fax No:	
					Cell No:	
					E-mail:	
					Signature:	
Mr	CUNSA	Datá	pedreiro	SALQUENHE PORTO	Tel No:	
					Fax No:	
					Cell No:	
					E-mail:	
					Signature:	
Mr	João	Datá	condutor	SALQUENHE PORTO	Tel No:	
					Fax No:	
					Cell No:	5191016
					E-mail:	
					Signature:	
Mr	Mandana	INdame	PROFESSOR	SALQUENHE PORTO	Tel No:	
					Fax No:	
					Cell No:	5262981
					E-mail:	
					Signature:	
Mr	Manuel	M'Boia	PROFESSOR	SALQUENHE PORTO	Tel No:	
					Fax No:	
					Cell No:	
					E-mail:	
					Signature:	

Titulo	Nome	Apelido	Organização (por favor, não use siglas)	Endereço	Contacto	
Mr	ERNESTO	Sanhá	ESTudanTE	SalQUENHE PORTO	Tel No:	
					Fax No:	
					Cell No:	5910812
					E-mail:	
					Signature:	
Mr	Mariama	NHaga	AGRicultORA	SalQUENHE PORTO	Tel No:	
					Fax No:	
					Cell No:	6274804
					E-mail:	
					Signature:	
Mr	QuiLETchi ~~QUINHEU~~	IanBe	AGRicultOR	SalQUENHE PORTO	Tel No:	
					Fax No:	
					Cell No:	
					E-mail:	
					Signature:	
Mr	Fatu	NHangue	AGRicultORA	SalQUENHE PORTO	Tel No:	
					Fax No:	
					Cell No:	
					E-mail:	
					Signature:	
Mr	NANgBa	NHaga	AGRicultORA	SalQUENHE PORTO	Tel No:	
					Fax No:	
					Cell No:	
					E-mail:	
					Signature:	

Titulo	Nome	Apelido	Organização (por favor, não use siglas)	Endereço	Contacto	
Mr	QUINTINO	N'dame	AGRICULTOR	SALQUENHE PORTO	Tel No:	
					Fax No:	
					Cell No:	
					E-mail:	
					Signature:	
Mr	Sadna	Dám	AGRICULTOR	SALQUENHE PORTO	Tel No:	
					Fax No:	
					Cell No:	
					E-mail:	
					Signature:	
Mr	Bacar	Dám	PROFESSOR	SALQUENHE PORTO	Tel No:	
					Fax No:	
					Cell No:	
					E-mail:	
					Signature:	
Mr	Aliloe	INdame	AGRICULTORA	SALQUENHE PORTO	Tel No:	
					Fax No:	
					Cell No:	
					E-mail:	
					Signature:	
Mr	ROSA	Baina	AGRICULTORA	SALQUENHE PORTO	Tel No:	
					Fax No:	
					Cell No:	
					E-mail:	
					Signature:	

Titulo	Nome	Apelido	Organização (por favor, não use siglas)	Endereço	Contacto	
Mr	Cicilia	INPal	ESTudanTE	Sal@QUENHE PORTO	Tel No:	
					Fax No:	
					Cell No:	5262937
					E-mail:	
					Signature:	
Mr	Tchutcha	N'Bala	AGRicultora	Sal@QUENHE PORTO	Tel No:	
					Fax No:	
					Cell No:	5892979
					E-mail:	
					Signature:	
Mr	QUINTA	Tchuda	AGRicultora	Sal@QUENHE PORTO	Tel No:	
					Fax No:	
					Cell No:	6265645
					E-mail:	
					Signature:	
Mr	Paulo	Tchuda	pescador	Sal@QUENHE PORTO	Tel No:	
					Fax No:	
					Cell No:	6085128
					E-mail:	
					Signature:	
					Tel No:	
					Fax No:	
					Cell No:	
					E-mail:	
					Signature:	

PROJECTO DE FOSFATO DE FARIM. AVALIAÇÃO DE IMPACTO SOCIAL E AMBIENTAL (ESIA) PARA GB MINERALS.

REGISTO DE PRESENÇAS

Reunião : DONTA CADSEC
Data : 11/12/2013
Local : Community meeting place

Titulo	Nome	Apelido	Organização (por favor, não use siglas)	Endereço	Contacto	
Mr	Carl	Nicholas	Golder Associates (UK)	1Alie street, London E1 8DE,UK	Tel No:	00447814143523
					Fax No:	00442074230941
					Cell No:	00447814143523
					E-mail:	CNicholas@golder.com
					Signature:	
MR	Daniel	N'Tamsi	Lavrador	Cabo-Check	Tel No:	9135532
					Fax No:	
					Cell No:	
					E-mail:	
					Signature:	
MR	Quesna	M'Bundé	lavrador	Cabo-Check	Tel No:	6258919
					Fax No:	
					Cell No:	
					E-mail:	
					Signature:	

Titulo	Nome	Apelido	Organização (por favor, não use siglas)	Endereço	Contacto	
MR	Cunsa	TCHonque	Lavrador	Cabo - CHECK	Tel No:	
					Fax No:	9239917
					Cell No:	
					E-mail:	
					Signature:	
MR	Midana	TCHigna	Lavrador	Cabo - CHECK	Tel No:	5143770
					Fax No:	
					Cell No:	
					E-mail:	
					Signature:	
MR	Domingos	NHaga	Lavrador	Cabo - CHECK	Tel No:	6555150
					Fax No:	
					Cell No:	
					E-mail:	
					Signature:	
MR	Duarte	Kabi	Lavrador	Cabo - CHECK	Tel No:	
					Fax No:	
					Cell No:	
					E-mail:	
					Signature:	
MR	Fernando	NTambé	Lavrador	Cabo - CHECK	Tel No:	6944002
					Fax No:	
					Cell No:	
					E-mail:	
					Signature:	

Titulo	Nome	Apelido	Organização (por favor, não use siglas)	Endereço	Contacto	
MR	Fernando	NHaga	lavrador	Cabo - CHECK	Tel No:	
					Fax No:	6408416
					Cell No:	
					E-mail:	
					Signature:	
MR	Linda	TCHongue	Lavradora	Cabo - CHECK	Tel No:	
					Fax No:	
					Cell No:	
					E-mail:	
					Signature:	
MR	xLindgabá	N'GHada	Lavradora	Cabo - CHECK	Tel No:	9171108
					Fax No:	
					Cell No:	
					E-mail:	
					Signature:	
MR	Castigo	Quadé	lavrador	Cabo-CHECK	Tel No:	5263039-6386602
					Fax No:	
					Cell No:	
					E-mail:	
					Signature:	
MR	Gubel	Candé	Lavrador	Urgul	Tel No:	
					Fax No:	
					Cell No:	
					E-mail:	
					Signature:	

Titulo	Nome	Apelido	Organização (por favor, não use siglas)	Endereço	Contacto	
MR	Augusto	NThama	lavrador	Cabo - CHeck	Tel No:	5879153
					Fax No:	
					Cell No:	
					E-mail:	
					Signature:	
MR	Banteia	NHaga	Estudante	Cabo - CHeck	Tel No:	
					Fax No:	
					Cell No:	
					E-mail:	
					Signature:	
MR	Segunda	NDafa	lavradora	Cabo - CHECK	Tel No:	
					Fax No:	
					Cell No:	
					E-mail:	
					Signature:	
MR	Victoria	Mam	lavradora	Cabo - CHeck	Tel No:	6429519
					Fax No:	
					Cell No:	
					E-mail:	
					Signature:	
MR	Madam	NTHama	lavrador	Cabo - CHECK	Tel No:	
					Fax No:	
					Cell No:	
					E-mail:	
					Signature:	

Titulo	Nome	Apelido	Organização (por favor, não use siglas)	Endereço	Contacto	
MR	Ilena	N'Guenha	Lavradora	Cabo - CHECK	Tel No:	0311478
					Fax No:	
					Cell No:	
					E-mail:	
					Signature:	
MR	Sandra	M'Bonda	Lavradora	Cabo - CHECK	Tel No:	
					Fax No:	
					Cell No:	
					E-mail:	
					Signature:	
MR	Quesana	N'Dibé	Lavrador	Cabo - CHECK	Tel No:	
					Fax No:	
					Cell No:	
					E-mail:	
					Signature:	
MR	Lusna	N'Haga	Lavrador	Cabo - CHECK	Tel No:	
					Fax No:	
					Cell No:	
					E-mail:	
					Signature:	

Titulo	Nome	Apelido	Organização (por favor, não use siglas)	Endereço	Contacto	
	Nangua	Dumonte	Lavradora	Cabo-Check	Tel No:	
					Fax No:	
					Cell No:	
					E-mail:	
					Signature:	
					Tel No:	
					Fax No:	
					Cell No:	
					E-mail:	
					Signature:	
					Tel No:	
					Fax No:	
					Cell No:	
					E-mail:	
					Signature:	
					Tel No:	
					Fax No:	
					Cell No:	
					E-mail:	
					Signature:	
					Tel No:	
					Fax No:	
					Cell No:	
					E-mail:	
					Signature:	

PROJECTO DE FOSFATO DE FARIM. AVALIAÇÃO DE IMPACTO SOCIAL E AMBIEN (ESIA) PARA GB MINERALS.

REGISTO DE PRESENÇAS

Reunião : SALIQUENHA
Data : 9 DEC 2013
Local : COMMUNITY MEETING AREA

Titulo	Nome	Apelido	Organização (por favor, não use siglas)	Endereço	Contacto	
Mr	Carl	Nicholas	Golder Associates (UK)	1Alie street, London E1 8DE,UK	Tel No:	00447814143523
					Fax No:	00442074230941
					Cell No:	00447814143523
					E-mail:	CNicholas@golder.com
					Signature:	
SOFO DA FAR	MALAMTANG-UO	TANGADO	Presidente da Comissão Comerciante	SALIQUENHESA	Tel No:	5553035
					Fax No:	r
					Cell No:	
					E-mail:	
					Signature:	
Mr	Brahima	DARAMI	comissão	SALIQUENHESA	Tel No:	6667418
					Fax No:	
					Cell No:	
					E-mail:	
					Signature:	

Titulo	Nome	Apelido	Organização (por favor, não use siglas)	Endereço	Contacto	
MV	Wdomiro	Turé	Organização Lavrador	Saliquenhesa	Tel No:	
					Fax No:	68149 SL
					Cell No:	
					E-mail:	
					Signature:	
MV	Nosacor	Darami	Organização Lavrador	Saliquenhesa	Tel No:	
					Fax No:	
					Cell No:	
					E-mail:	
					Signature:	
MV	Malany	Sela	Pedreiro	Saliquenhesa	Tel No:	
					Fax No:	
					Cell No:	
					E-mail:	
					Signature:	
MV	Boanima	Turé	Produtor	Saliquenhesa	Tel No:	87231782
					Fax No:	
					Cell No:	
					E-mail:	
					Signature:	
MV	Alai	Turé	Produtor	Saliquenhesa	Tel No:	
					Fax No:	
					Cell No:	
					E-mail:	
					Signature:	

Titulo	Nome	Apelido	Organização (por favor, não use siglas)	Endereço	Contacto	
MC	MALAM	Turé	Professor	Saliqueinheira	Tel No:	
					Fax No:	9184515
					Cell No:	
					E-mail:	
					Signature:	
MC	Boulton	Diallami	Lavrador	Que Saliqueinhe ira	Tel No:	
					Fax No:	
					Cell No:	
					E-mail:	
					Signature:	
MC	Serifo	Turé	Lavrador	Saliqueinheira	Tel No:	
					Fax No:	
					Cell No:	
					E-mail:	
					Signature:	
MC	Ender	Sadia	Professor	Saliqueinheira	Tel No:	
					Fax No:	6633026
					Cell No:	
					E-mail:	
					Signature:	
MC	Malam	Turé	Alfaiate	Saliqueinheira	Tel No:	
					Fax No:	6102890
					Cell No:	
					E-mail:	
					Signature:	

Titulo	Nome	Apelido	Organização (por favor, não use siglas)	Endereço	Contacto	
MJ	CARLAM	INJAI	LAVRADOR	SALIÇUENHESA	Tel No:	
					Fax No:	1(
					Cell No:	
					E-mail:	
					Signature:	
MJ	Andre	Seija	LAVRADOR	UFOLE	Tel No:	6393062
					Fax No:	
					Cell No:	
					E-mail:	
					Signature:	
11	NFACi	Sessa	Estudante	SALIÇUENHESA	Tel No:	4
					Fax No:	
					Cell No:	
					E-mail:	
					Signature:	
MJ	ABDO	TANBADO	LAVRADOR	SALIÇUENHESA	Tel No:	6497792
					Fax No:	
					Cell No:	
					E-mail:	
					Signature:	
MJ	Vice	DABO	LAVRADOR	SALIÇUENHESA	Tel No:	
					Fax No:	6083742
					Cell No:	
					E-mail:	
					Signature:	

Titulo	Nome	Apelido	Organização (por favor, não use siglas)	Endereço	Contacto	
MV	QUEIA	SEDA	LAVRADOR	SALIQUENHEIA	Tel No:	
					Fax No:	5742474
					Cell No:	
					E-mail:	
					Signature:	
MV	MOSSA	DJAMANCA	~~LAVRADOR~~ LAVRADOR	URIQUE	Tel No:	
					Fax No:	"
					Cell No:	
					E-mail:	
					Signature:	
MV	MOSSA	SIDA	PEDREIRO	SALIQUENHEIA	Tel No:	
					Fax No:	6123588
					Cell No:	
					E-mail:	
					Signature:	
MV	SALIDO	DARAMI	CALIPEDREIRO	SALIQUENHEIA	Tel No:	
					Fax No:	5279776
					Cell No:	
					E-mail:	
					Signature:	
	MAMODO	BARRO	"	SALIQUENHEIA	Tel No:	
					Fax No:	"
					Cell No:	
					E-mail:	
					Signature:	

Titulo	Nome	Apelido	Organização (por favor, não use siglas)	Endereço	Contacto	
MJ	Braima	DARAMI	11	SALIOUENHE Sa	Tel No:	
					Fax No:	11
					Cell No:	
					E-mail:	
					Signature:	
MJ	Serifo	Nuñez	Imame	SALIOUENHE Sa	Tel No:	
					Fax No:	6787403
					Cell No:	
					E-mail:	
					Signature:	
MJ	AMADU	Turé	Comerciante	SALIOUENHE Sa	Tel No:	
					Fax No:	11
					Cell No:	
					E-mail:	
					Signature:	
MJ	Baca Djudju	Turé	ALIFATE	SALIOUENHE Sa	Tel No:	
					Fax No:	11
					Cell No:	
					E-mail:	
					Signature:	

Titulo	Nome	Apelido	Organização (por favor, não use siglas)	Endereço	Contacto	
MJ	Sara	Turé	A Semeia Saude	Saliquenha	Tel No:	
					Fax No:	15519719
					Cell No:	
					E-mail:	
					Signature:	
MJ	MAMADI	DARAMI	Comercio	Saliquenhesa	Tel No:	
					Fax No:	15597543
					Cell No:	
					E-mail:	
					Signature:	
MJ	LAISANA	TANSADO	Lavrador	Saliquenhesa	Tel No:	
					Fax No:	6074915
					Cell No:	
					E-mail:	
					Signature:	
MJ	NFAMARA	SIDDO	Lavrador	Saliquenhesa	Tel No:	5262950
					Fax No:	
					Cell No:	
					E-mail:	
					Signature:	
MJ	AMADO	Nanjai	Lavrador	Saliquenhesa	Tel No:	
					Fax No:	9272172
					Cell No:	
					E-mail:	
					Signature:	

Titulo	Nome	Apelido	Organização (por favor, não use siglas)	Endereço	Contacto	
MV	Qubba	Dabo	Lavrador	Saliçuenhesa	Tel No:	
					Fax No:	cc
					Cell No:	
					E-mail:	
					Signature:	
MV	Dano	Tanbajo	Lavrador	Saliçuenhesa	Tel No:	"
					Fax No:	
					Cell No:	
					E-mail:	
					Signature:	
MV	Abdai	Daramy	comerciante	Saliçuenhesa	Tel No:	
					Fax No:	
					Cell No:	
					E-mail:	
					Signature:	
MV	Iaia	Daramy	"	Saliçuenhesa	Tel No:	
					Fax No:	
					Cell No:	
					E-mail:	
					Signature:	
MV	Malam	Naj	comerciante	Saliçuenhesa	Tel No:	659555/62
					Fax No:	
					Cell No:	
					E-mail:	
					Signature:	

Titulo	Nome	Apelido	Organização (por favor, não use siglas)	Endereço	Contacto	
M	AMADO	Sidde	LAVrador	SALIQUENHESA	Tel No:	
					Fax No:	6872632
					Cell No:	
					E-mail:	
					Signature:	
M/	LAMINE	Sidde	LAVrador	caNSica	Tel No:	917207G/Z598937
					Fax No:	
					Cell No:	
					E-mail:	
					Signature:	
M/	NFALi	turé	LAVrador	SaliQUENHESA	Tel No:	599092[illegible]/77538756
					Fax No:	
					Cell No:	
					E-mail:	
					Signature:	
1/	MALiQUE	turé	ESTUDANTE	SaliQUENHESA	Tel No:	5444797/
					Fax No:	
					Cell No:	
					E-mail:	
					Signature:	
	Salom	Sidde	ALFAIATE	SaliQUENHESA	Tel No:	6258890
					Fax No:	
					Cell No:	
					E-mail:	
					Signature:	

Titulo	Nome	Apelido	Organização (por favor, não use siglas)	Endereço	Contacto	
MV	Braima	Turé	Estudante	Saliquinhesa	Tel No:	
					Fax No:	ll
					Cell No:	
					E-mail:	
					Signature:	
MV	ALADJi	Baio	Professor	Farim	Tel No:	ll
					Fax No:	
					Cell No:	
					E-mail:	
					Signature:	
MV	LAMINE	Baio	Conselho GBM.	Farim	Tel No:	5337738
					Fax No:	ll
					Cell No:	
					E-mail:	
					Signature:	
MV	Bajanca	Santhan	G-M.	Farim	Tel No:	
					Fax No:	
					Cell No:	
					E-mail:	
					Signature:	
MV	LALE	Suane	G.M.	FARIM	Tel No:	6913390/5930735
					Fax No:	
					Cell No:	
					E-mail:	
					Signature:	

Titulo	Nome	Apelido	Organização (por favor, não use siglas)	Endereço	Contacto	
MV	ALIMANI	tchantchat	G.B.M.	farim	Tel No:	5959480
					Fax No:	
					Cell No:	
					E-mail:	
					Signature:	
MJ	Colon Fe	TABADO	Produtor	SALIQUENHE	Tel No:	6871570
					Fax No:	
					Cell No:	
					E-mail:	
					Signature:	
MV	ABO	turé	~~[illegible]~~ Comerciante	FODE	Tel No:	6574199
					Fax No:	
					Cell No:	
					E-mail:	
					Signature:	
MV	MAMA	SISSO	LAVRADORA	SALIQUENHESA	Tel No:	U
					Fax No:	
					Cell No:	
					E-mail:	
					Signature:	

Titulo	Nome	Apelido	Organização (por favor, não use siglas)	Endereço	Contacto	
M/	ADAMA	DABO	Colitevadora	SaliQUENHESa	Tel No:	11
					Fax No:	
					Cell No:	
					E-mail:	
					Signature:	
M/	Ava	turé	Colitevadora	SaliQUENHESa	Tel No:	11
					Fax No:	
					Cell No:	
					E-mail:	
					Signature:	
M/	Braima	Darami	Condiffor	SaliQUENHESa	Tel No:	11
					Fax No:	
					Cell No:	
					E-mail:	
					Signature:	
M/	ABo	turé	LAVRador	SaliQUENHESa	Tel No:	54494265
					Fax No:	
					Cell No:	
					E-mail:	
					Signature:	
M/	LASSana	NDjai	Carpinteiro	SaliQUENHESa	Tel No:	55590233
					Fax No:	
					Cell No:	
					E-mail:	
					Signature:	

Titulo	Nome	Apelido	Organização (por favor, não use siglas)	Endereço	Contacto	
MV	DJANDOE	SIDIA	LAVRADARA	SALIQUENHESA	Tel No:	5840383
					Fax No:	
					Cell No:	
					E-mail:	
					Signature:	
MV	BINTA	TURÉ	LAVRADARA	SALIQUENHESA	Tel No:	//
					Fax No:	
					Cell No:	
					E-mail:	
					Signature:	
MV	FATOU	SOSA	LAVRADORA	SALIQUENHESA	Tel No:	6386650
					Fax No:	
					Cell No:	
					E-mail:	
					Signature:	
//	AISSATO	NDJAI	EDUCADORA	SALIQUENHESA	Tel No:	//
					Fax No:	
					Cell No:	
					E-mail:	
					Signature:	
MV	AUA	NDJAI	LAVRADARA	SALIQUENHESA	Tel No:	//
					Fax No:	
					Cell No:	
					E-mail:	
					Signature:	

Titulo	Nome	Apelido	Organização (por favor, não use siglas)	Endereço	Contacto	
MV	AISSATO	SEDJO	LAVRADORA	SARIQUENHESA	Tel No:	11
					Fax No:	
					Cell No:	
					E-mail:	
					Signature:	
MV	MAMA	TURE	LAVRADORA	SARIQUENHESA	Tel No:	11
					Fax No:	
					Cell No:	
					E-mail:	
					Signature:	
MV	FATEMA	TURÉ	LAVRADORA	SARIQUENHESA	Tel No:	11
					Fax No:	
					Cell No:	
					E-mail:	
					Signature:	
MV	MANSATA	BADJO	LAVRADORA	SARIQUENHESA	Tel No:	67
					Fax No:	
					Cell No:	
					E-mail:	
					Signature:	
MV	OZONOSA	SIDJO	LAVRADORA	SARIQUENHESA	Tel No:	11
					Fax No:	
					Cell No:	
					E-mail:	
					Signature:	

Titulo	Nome	Apelido	Organização (por favor, não use siglas)	Endereço	Contacto	
MV	MARIAMA	turé	LAVRADORA	SARIQUENHEBA	Tel No:	11
					Fax No:	
					Cell No:	
					E-mail:	
					Signature:	
11	NAFI	SISSE	LAVRADORA	SARIQUENHEBA	Tel No:	11
					Fax No:	
					Cell No:	
					E-mail:	
					Signature:	
MV	SARI	QUETA	LAVRADORA	SARIQUENHEBA	Tel No:	11
					Fax No:	
					Cell No:	
					E-mail:	
					Signature:	
MV	SARI	DARAME	LAVRADORA	SARIQUENHEBA	Tel No:	11
					Fax No:	
					Cell No:	
					E-mail:	
					Signature:	
MV	LASSANA	TANSEDO	LAVRADORA	SARIQUENHEBA	Tel No:	11
					Fax No:	
					Cell No:	
					E-mail:	
					Signature:	

Titulo	Nome	Apelido	Organização (por favor, não use siglas)	Endereço	Contacto	
M/	MARIAMA	TANDADO	LAVradeira	Sali QUENHEBA	Tel No:	41
					Fax No:	
					Cell No:	
					E-mail:	
					Signature:	
M/	SAIDO	TABARRO	LAVRADEIRA	SALI QUENHEBA	Tel No:	
					Fax No:	
					Cell No:	
					E-mail:	
					Signature:	
M/	Amido	Turé	Comerciante	Sali QUENHEBA	Tel No:	596105001
					Fax No:	
					Cell No:	
					E-mail:	
					Signature:	
M/	ABubacar	Dabrame	Pedreiro	Sali QUENHEBA	Tel No:	827137
					Fax No:	
					Cell No:	
					E-mail:	
					Signature:	

1 : 2

PROJECTO DE FOSFATO DE FARIM. AVALIAÇÃO DE IMPACTO SOCIAL E AMBIENTAL (ESIA) PARA GB MINERALS.

REGISTO DE PRESENÇAS

Reunião : Sali Quinhemba

Data : 09/12/13

Local : FARIM

Titulo	Nome	Apelido	Organização (por favor, não use siglas)	Endereço	Contacto	
Mr	Carl	Nicholas	Golder Associates (UK)	1Alie street, London E1 8DE,UK	Tel No:	00447814143523
					Fax No:	00442074230941
					Cell No:	00447814143523
					E-mail:	CNicholas@golder.com
					Signature:	
	Maria	Pereira	Comunidade	Salique Iembra	Tel No:	
					Fax No:	
					Cell No:	592 ex 46
					E-mail:	
					Signature:	
	Kuléise	Tamba	Comunidade (Cogna)	Tambata	Tel No:	
					Fax No:	
					Cell No:	-
					E-mail:	
					Signature:	

Titulo	Nome	Apelido	Organização (por favor, não use siglas)	Endereço	Contacto	
MR	Bana	Tura	Padeiro	Salequeheba	Tel No:	
					Fax No:	
					Cell No:	67496548
					E-mail:	
					Signature:	
ML	Lasaina	Eugei	Lavrador	Taubato - Braço	Tel No:	
					Fax No:	
					Cell No:	9271810
					E-mail:	
					Signature:	
ML	Kauso	Kenia	Lavrador	Kaicoto - Mana	Tel No:	
					Fax No:	
					Cell No:	6609934
					E-mail:	
					Signature:	
ML	Musato	Dure	Lavrador	Salequeheba	Tel No:	
					Fax No:	
					Cell No:	55 96 00
					E-mail:	
					Signature:	
ML	Mamado	Sela	Lavradora	Salequeheba	Tel No:	
					Fax No:	
					Cell No:	589 3972
					E-mail:	
					Signature:	

Titulo	Nome	Apelido	Organização (por favor, não use siglas)	Endereço	Contacto	
					Tel No:	
					Fax No:	
Mr	Moussa	Touré	Laurador	Sikhia	Cell No:	635 35 20
					E-mail:	
					Signature:	
					Tel No:	
					Fax No:	
Mr	Mussa	Touré	Laurador	Sikhia	Cell No:	599 63 28
					E-mail:	
					Signature:	
					Tel No:	
					Fax No:	
Mr	Anso	Touré	11	11	Cell No:	6869976
					E-mail:	
					Signature:	
					Tel No:	
					Fax No:	
Mr	Mustafa	Touré	11	11	Cell No:	
					E-mail:	-
					Signature:	
					Tel No:	
					Fax No:	
Mr	Mala	Toubado	11	11	Cell No:	
					E-mail:	
					Signature:	

Titulo	Nome	Apelido	Organização (por favor, não use siglas)	Endereço	Contacto	
MR	Umaro	Tambado	lavrador	Salguenhe Bá	Tel No:	
					Fax No:	
					Cell No:	6274850
					E-mail:	
					Signature:	
MR	Bala	Turé	lavrador	Ufudé	Tel No:	
					Fax No:	
					Cell No:	
					E-mail:	
					Signature:	
MR	Buli	Camara	Comerciante	Sabadgol	Tel No:	
					Fax No:	6938011
					Cell No:	
					E-mail:	
					Signature:	
MR	Maligue	Turé	Estudante	Salguenhe bá	Tel No:	
					Fax No:	6358920
					Cell No:	
					E-mail:	
					Signature:	
MR	Mamadi	Silá	lavrador	Salguenhe bá	Tel No:	
					Fax No:	
					Cell No:	
					E-mail:	
					Signature:	

Titulo	Nome	Apelido	Organização (por favor, não use siglas)	Endereço	Contacto	
MR	Bubacar	Djalo	Lavrador	Salquenhe - Bá	Tel No:	
					Fax No:	
					Cell No:	6693866
					E-mail:	
					Signature:	
MR	Ensa	Dabó	Lavrador	Salquenhe - Bá	Tel No:	
					Fax No:	9272062
					Cell No:	
					E-mail:	
					Signature:	
MR	Serifo	Turé	Lavrador	Salquenhe - Bá	Tel No:	
					Fax No:	5404165
					Cell No:	
					E-mail:	
					Signature:	
MR	Sadjo	Camara	Lavrador	Salquenhe - Bá	Tel No:	
					Fax No:	
					Cell No:	
					E-mail:	
					Signature:	

Titulo	Nome	Apelido	Organização (por favor, não use siglas)	Endereço	Contacto	
MR	Mussa	Turé	lavrador	Salgueiro - Bá	Tel No:	
					Fax No:	
					Cell No:	5322396
					E-mail:	
					Signature:	
MR	Braima	Cissé	Alfaiate	Salgueiro - Bá	Tel No:	
					Fax No:	5933591
					Cell No:	
					E-mail:	
					Signature:	
MR	Djacaria	Darame	lavrador	Salgueiro - Bá	Tel No:	
					Fax No:	
					Cell No:	
					E-mail:	
					Signature:	
MR	Mamadu	Indjai	~~Lavra~~ Ferreiro	Salgueiro - Bá	Tel No:	
					Fax No:	6232210
					Cell No:	
					E-mail:	
					Signature:	
MR	Iaia	Suana	Carpinteiro	Salgueiro - Bá	Tel No:	
					Fax No:	6016979
					Cell No:	
					E-mail:	
					Signature:	

Titulo	Nome	Apelido	Organização (por favor, não use siglas)	Endereço	Contacto	
MR	Bassana	Indjai	Pedreiro	Salgueiro - Sol	Tel No:	
					Fax No:	
					Cell No:	914 17 56
					E-mail:	
					Signature:	
MR	Issufe	Cissé	Lavrador	Salgueiro - Sol	Tel No:	
					Fax No:	
					Cell No:	
					E-mail:	
					Signature:	
MR	Ramine	Turé	Estudante	Salgueiro - Sol	Tel No:	
					Fax No:	
					Cell No:	
					E-mail:	
					Signature:	
MR	Aladje	Seide	Lavrador	Salgueiro - Sol	Tel No:	
					Fax No:	
					Cell No:	
					E-mail:	
					Signature:	
MR	Malam	Tambado	Lavrador	Salgueiro - Sol	Tel No:	
					Fax No:	
					Cell No:	
					E-mail:	
					Signature:	

Titulo	Nome	Apelido	Organização (por favor, não use siglas)	Endereço	Contacto	
MR	Wil	Dabó	Lavrador	Salguenhe - Sa	Tel No:	
					Fax No:	
					Cell No:	
					E-mail:	
					Signature:	
MR	Ioncuba	Indjai	Condutor Mecanico	Salguenhe - Sa	Tel No:	
					Fax No:	
					Cell No:	6885688
					E-mail:	
					Signature:	
MR	Sido	Indjai	Lavrador	Salguenhe - Sa	Tel No:	
					Fax No:	
					Cell No:	6590391
					E-mail:	
					Signature:	
MR	Calilo	Tamfado	Carpinteiro	Salguenhe - Sa	Tel No:	
					Fax No:	
					Cell No:	6561895
					E-mail:	
					Signature:	
MR	Adama	Indjai	Padeiro	Salguenhe - Sa	Tel No:	
					Fax No:	6776912
					Cell No:	
					E-mail:	
					Signature:	

Titulo	Nome	Apelido	Organização (por favor, não use siglas)	Endereço	Contacto	
					Tel No:	
					Fax No:	
MR	Inussa	Darame	Pintor	Salquenhe - Bà	Cell No:	5183535
					E-mail:	
					Signature:	
					Tel No:	
					Fax No:	
MR	Ramine	Cissé	Alfaiate	Salquenhe - Bà	Cell No:	5470399
					E-mail:	
					Signature:	
					Tel No:	
					Fax No:	
MR	Braima	Indjai	Carpinteiro	Salquenhe - Bà	Cell No:	
					E-mail:	
					Signature:	
					Tel No:	5929006
					Fax No:	
MR	BACAR	BAIO	LABORATÓRIO FARIM	FARIM	Cell No:	6629006
					E-mail:	dembabaio@hotmail.com
					Signature:	
					Tel No:	
					Fax No:	
MR	DJADJE	BAIO	STORKMAN/GBM FARIM	FARIM	Cell No:	6637036/5323147
					E-mail:	BaioDjadje@Hotmail.com
					Signature:	

Titulo	Nome	Apelido	Organização (por favor, não use siglas)	Endereço	Contacto	
MR	USSUMANE	SANHÁ	ASS. BOOT	G.B.M	Tel No:	6634143/5527121
					Fax No:	
					Cell No:	
					E-mail:	sadjamba@hotmail.com
					Signature:	
MR	Suaibo	Darame	Carpinteiro	Salquenhe - Sa	Tel No:	8259433
					Fax No:	
					Cell No:	
					E-mail:	
					Signature:	
MR	Lamine	Indjai	Petrisista	Salquenhe - Sá	Tel No:	5292935
					Fax No:	
					Cell No:	
					E-mail:	
					Signature:	
MR	Sadjo	Indjai	Lavradora	Salquenhe	Tel No:	
					Fax No:	
					Cell No:	
					E-mail:	
					Signature:	

Titulo	Nome	Apelido	Organização (por favor, não use siglas)	Endereço	Contacto	
MR	Mariama	Sila	Lavradora	Salguemhe-Bá	Tel No:	
					Fax No:	
					Cell No:	
					E-mail:	
					Signature:	
MR	Binta	Djalo	Lavradora	Salguemhe-Bá	Tel No:	
					Fax No:	
					Cell No:	
					E-mail:	
					Signature:	
MR	Fatima	Dabó	Lavradora	Salguemhe-Bá	Tel No:	
					Fax No:	
					Cell No:	
					E-mail:	
					Signature:	
MR	Mai	Turé	Lavradora	Salguemhe-Bá	Tel No:	
					Fax No:	
					Cell No:	
					E-mail:	
					Signature:	
MR	Sali	Turé	Lavradora	Salguemhe-Bá	Tel No:	
					Fax No:	
					Cell No:	
					E-mail:	
					Signature:	

Titulo	Nome	Apelido	Organização (por favor, não use siglas)	Endereço	Contacto	
MR	Binta	Dabó	Lavradora	Salguenhe - Bà	Tel No:	
					Fax No:	
					Cell No:	
					E-mail:	
					Signature:	
MR	Cadi	Darame	Lavradora	Salguenhe - Bà	Tel No:	
					Fax No:	
					Cell No:	
					E-mail:	
					Signature:	
MR	Cadi	Cissé	Lavradora	Salguenhe - Bà	Tel No:	
					Fax No:	
					Cell No:	
					E-mail:	
					Signature:	
MR	Roque	Turé	Lavradora	Salguenhe - Bà	Tel No:	
					Fax No:	
					Cell No:	
					E-mail:	
					Signature:	
MR	Fatu	Darame	Lavradora	Salguenhe - Bà	Tel No:	
					Fax No:	
					Cell No:	
					E-mail:	
					Signature:	

Titulo	Nome	Apelido	Organização (por favor, não use siglas)	Endereço	Contacto	
MR	Mariama	Quita	Lavradora	Salguenhe - bá	Tel No:	
					Fax No:	
					Cell No:	
					E-mail:	
					Signature:	
MR	Aramata	Tambado	Lavradora	Salguenhe - bá	Tel No:	
					Fax No:	
					Cell No:	
					E-mail:	
					Signature:	
MR	Djara	N'Djai	Lavradora	Salguenhe - bá	Tel No:	
					Fax No:	
					Cell No:	
					E-mail:	
					Signature:	
MR	Seco	Dabó	Mecanico G.B.M Farim	Farim	Tel No:	6902514 - 5746012
					Fax No:	
					Cell No:	
					E-mail:	
					Signature:	
MR	Satam	Dabó	Lavradora	Salguenhe - bá	Tel No:	
					Fax No:	
					Cell No:	
					E-mail:	
					Signature:	

Titulo	Nome	Apelido	Organização (por favor, não use siglas)	Endereço	Contacto	
					Tel No:	
					Fax No:	
Mr	Satam	Suana	Lavradora	Salguenhe - Bá	Cell No:	
					E-mail:	
					Signature:	
					Tel No:	
					Fax No:	
Mr	Mariato	Cissé	Lavradora	Salguenhe - Bá	Cell No:	
					E-mail:	
					Signature:	
					Tel No:	5814984 - 6814984
					Fax No:	
	Rute	Gomes	Comerciante	Bafatá	Cell No:	
					E-mail:	
					Signature:	
					Tel No:	
					Fax No:	
	Mama	Cissé	Lavradora	Salguenhe - Bá	Cell No:	
					E-mail:	
					Signature:	
					Tel No:	
					Fax No:	
	Sali	Daramé	Lavradora	Salguenhe - Bá	Cell No:	
					E-mail:	
					Signature:	

Titulo	Nome	Apelido	Organização (por favor, não use siglas)	Endereço	Contacto	
	Sumaila	Dabó	Lavrador	Salgueiro - Bá	Tel No:	
					Fax No:	
					Cell No:	
					E-mail:	
					Signature:	
	Binta	Cissé	Lavradora	Salgueiro - Bá	Tel No:	
					Fax No:	
					Cell No:	
					E-mail:	
					Signature:	
					Tel No:	
					Fax No:	
					Cell No:	
					E-mail:	
					Signature:	
					Tel No:	
					Fax No:	
					Cell No:	
					E-mail:	
					Signature:	

PROJECTO DE FOSFATO DE FARIM. AVALIAÇÃO DE IMPACTO SOCIAL E AMBIENTAL (ESIA) PARA GB MINERALS.

REGISTO DE PRESENÇAS

Reunião : SANDJIL COMMUNITY MEETING
Data : 10 DECEMBER 2013
Local : _____

Titulo	Nome	Apelido	Organização (por favor, não use siglas)	Endereço	Contacto	
Mr	Carl	Nicholas	Golder Associates (UK)	1Alie street, London E1 8DE,UK	Tel No:	00447814143523
					Fax No:	00442074230941
					Cell No:	00447814143523
					E-mail:	CNicholas@golder.com
					Signature:	
Mr	Mamudu	Mancal	Lavora	Sandjal	Tel No:	5132292
					Fax No:	
					Cell No:	
					E-mail:	
					Signature:	
	Ussumane	Camará	Lavora	Sandjal	Tel No:	
					Fax No:	
					Cell No:	
					E-mail:	
					Signature:	

Titulo	Nome	Apelido	Organização (por favor, não use siglas)	Endereço	Contacto	
Mr	BOTO	Mané	Lavrador	Sandjal	Tel No:	6572617
					Fax No:	
					Cell No:	
					E-mail:	
					Signature:	
Mr	ANSU	Sadjo	Lavrador	Sandjal	Tel No:	
					Fax No:	
					Cell No:	
					E-mail:	
					Signature:	
Mr	Samba	camará	Lavrador	Sandjal	Tel No:	6291654
					Fax No:	
					Cell No:	
					E-mail:	
					Signature:	
Mr	Sambu	Sadjó	Lavrador	Saadjal	Tel No:	6588454
					Fax No:	
					Cell No:	
					E-mail:	
					Signature:	
Mr	Alabalo	camará	Lavrador	Sandjal	Tel No:	6574009
					Fax No:	
					Cell No:	
					E-mail:	
					Signature:	

Titulo	Nome	Apelido	Organização (por favor, não use siglas)	Endereço	Contacto	
Mr	Serifo	camará	Lavrador	Sandjal	Tel No:	6662665
					Fax No:	
					Cell No:	
					E-mail:	
					Signature:	
Mr	Sandje	Mané	Lavrador	Sandjal	Tel No:	
					Fax No:	
					Cell No:	
					E-mail:	
					Signature:	
Mr	Mussa	Mancal	Lavrador	Sandjal	Tel No:	6802916
					Fax No:	
					Cell No:	
					E-mail:	
					Signature:	
Mr	Ué	Sisse	Fotografo	sandjal	Tel No:	5263098
					Fax No:	
					Cell No:	
					E-mail:	
					Signature:	
Mr	TUNBulo	Darame	Lavrador	Sandjal	Tel No:	
					Fax No:	
					Cell No:	
					E-mail:	
					Signature:	

Titulo	Nome	Apelido	Organização (por favor, não use siglas)	Endereço	Contacto	
Mr	VICENTE	camará	ENFERMEIRO	Sandjal	Tel No:	6019308
					Fax No:	
					Cell No:	
					E-mail:	
					Signature:	
Mr	TEREMA	Mané	Lavrador	Sandjal	Tel No:	
					Fax No:	
					Cell No:	
					E-mail:	
					Signature:	
Mr	Tchico	Samta	Lavrador	Sandjal	Tel No:	
					Fax No:	
					Cell No:	
					E-mail:	
					Signature:	
Mr	Sadja	Mane	ESTudante	sandjal	Tel No:	
					Fax No:	
					Cell No:	
					E-mail:	
					Signature:	
Mr	ESTABO	Camará	ESTudante	Sandjal	Tel No:	
					Fax No:	
					Cell No:	
					E-mail:	
					Signature:	

Titulo	Nome	Apelido	Organização (por favor, não use siglas)	Endereço	Contacto	
Mr	Zé	Seidi	Estudante	Sandjal	Tel No:	
					Fax No:	
					Cell No:	
					E-mail:	
					Signature:	
Mr	Pascal	Sadjo	Lavrador	Sandjal	Tel No:	6291763
					Fax No:	
					Cell No:	
					E-mail:	
					Signature:	
Mr	ABulai	Mané	Estudante	Sandjal	Tel No:	
					Fax No:	
					Cell No:	
					E-mail:	
					Signature:	
Mr	Elder	Camará	Estudante	Sandjal	Tel No:	
					Fax No:	
					Cell No:	
					E-mail:	
					Signature:	
Mr	Michael	Mane	Estudante	Sadjal	Tel No:	
					Fax No:	
					Cell No:	
					E-mail:	
					Signature:	

Titulo	Nome	Apelido	Organização (por favor, não use siglas)	Endereço	Contacto	
Mr	Mamudu	Camará	ESTudante	Sandjal	Tel No:	
					Fax No:	
					Cell No:	
					E-mail:	
					Signature:	
Mr	ABuLai	SONCO	Lavrador	Sandjal	Tel No:	
					Fax No:	
					Cell No:	
					E-mail:	
					Signature:	
Mr	Seco	Mancal	Lavrador	Sandjal	Tel No:	
					Fax No:	
					Cell No:	
					E-mail:	
					Signature:	
Mr	N'BalFE	Sadjo	Lavrador	Sandjal	Tel No:	6312359
					Fax No:	
					Cell No:	
					E-mail:	
					Signature:	

Titulo	Nome	Apelido	Organização (por favor, não use siglas)	Endereço	Contacto	
Mr	QUEBA	Mancal	Lavrador	Sandjal	Tel No:	
					Fax No:	
					Cell No:	
					E-mail:	
					Signature:	
Mr	Almame	Djamanca	Lavrador	Sandjal	Tel No:	
					Fax No:	
					Cell No:	
					E-mail:	
					Signature:	
Mr	ANTÓNIO	camará	PROFESSOR	SANdjal	Tel No:	
					Fax No:	
					Cell No:	
					E-mail:	
					Signature:	
Mr	Djalam	Sadjo	Lavrador	Sandjal	Tel No:	
					Fax No:	
					Cell No:	
					E-mail:	
					Signature:	
Mr	TCHERNO	SONCO	Lavrador	Sandjal	Tel No:	
					Fax No:	
					Cell No:	
					E-mail:	
					Signature:	

Titulo	Nome	Apelido	Organização (por favor, não use siglas)	Endereço	Contacto	
Mr	Djudju	Sadjo	carpinteiro	Sandjal	Tel No:	6266322
					Fax No:	
					Cell No:	
					E-mail:	
					Signature:	
Mr	BALIRAN	Sadjó	Lavrador	Sandjal	Tel No:	
					Fax No:	
					Cell No:	
					E-mail:	
					Signature:	
Mr	MANSo	Mané	Lavrador	Sandjal	Tel No:	
					Fax No:	
					Cell No:	
					E-mail:	
					Signature:	
Mr	ABU	INdjai	Lavrador	Sandjal	Tel No:	
					Fax No:	
					Cell No:	
					E-mail:	
					Signature:	
Mr	Lassana	Sonco	Lavrador	Sandjal	Tel No:	
					Fax No:	
					Cell No:	
					E-mail:	
					Signature:	

Titulo	Nome	Apelido	Organização (por favor, não use siglas)	Endereço	Contacto	
Mr	MUSSA	Sadjo	Lavrador	Sandjal	Tel No:	
					Fax No:	
					Cell No:	
					E-mail:	
					Signature:	
Mr	Landin	Biai	Lavrador	Sandjal	Tel No:	
					Fax No:	
					Cell No:	
					E-mail:	
					Signature:	
Mr	Vé	sadjo	Lavrador	Sandjal	Tel No:	
					Fax No:	
					Cell No:	
					E-mail:	
					Signature:	
Mr	Limine	Mancal	Lavrador	Sandjal	Tel No:	
					Fax No:	
					Cell No:	
					E-mail:	
					Signature:	
Mr	Malu	Mané	Lavrador	Sandjal	Tel No:	6483243
					Fax No:	
					Cell No:	
					E-mail:	
					Signature:	

Titulo	Nome	Apelido	Organização (por favor, não use siglas)	Endereço	Contacto	
Mr	MUSSA	Mané	Lavrador	Sandjal	Tel No:	6483342
					Fax No:	
					Cell No:	
					E-mail:	
					Signature:	
Mr	INTALI	Mané	Jogador	Sandjal	Tel No:	5494448
					Fax No:	
					Cell No:	
					E-mail:	
					Signature:	
Mr	Zé	MANCAL	Lavrador	Sandjal	Tel No:	6562255
					Fax No:	
					Cell No:	
					E-mail:	
					Signature:	
Mr	TALBO	Sadjo	Lavrador	Sandjal	Tel No:	
					Fax No:	
					Cell No:	
					E-mail:	
					Signature:	
Mr	Lamine	Mané	Lavrador	Sandjal	Tel No:	6611305
					Fax No:	
					Cell No:	
					E-mail:	
					Signature:	

Titulo	Nome	Apelido	Organização (por favor, não use siglas)	Endereço	Contacto	
Mr	Dudu	Mané	Lavrador	Sandjal	Tel No:	
					Fax No:	
					Cell No:	
					E-mail:	
					Signature:	
Mr	Faram	Mané	Lavrador	Sandjal	Tel No:	
					Fax No:	
					Cell No:	
					E-mail:	
					Signature:	
Mr	Cama	Mané	Lavrador	Sandjal	Tel No:	
					Fax No:	
					Cell No:	
					E-mail:	
					Signature:	
Mr	Soto	Sadjo	Lavrador	Sandjal	Tel No:	
					Fax No:	
					Cell No:	
					E-mail:	
					Signature:	

Titulo	Nome	Apelido	Organização (por favor, não use siglas)	Endereço	Contacto	
Mr	MOdo	camará	Lavrador	Sandjal	Tel No:	
					Fax No:	
					Cell No:	
					E-mail:	
					Signature:	
Mr	Samba	Mane	PROFESSOR	Sandjal	Tel No:	608.3545
					Fax No:	
					Cell No:	
					E-mail:	
					Signature:	
Mr	Lamine	Biai	PROFESSOR	Sandjal	Tel No:	6864772
					Fax No:	
					Cell No:	
					E-mail:	
					Signature:	
Mr	NUEL	INdjai	calpinteiro	Sandjal	Tel No:	9234759
					Fax No:	
					Cell No:	
					E-mail:	
					Signature:	
Mr	Zupa	Mané	Lavrador	Sandjal	Tel No:	5990956
					Fax No:	
					Cell No:	
					E-mail:	
					Signature:	

Titulo	Nome	Apelido	Organização (por favor, não use siglas)	Endereço	Contacto	
Mr	Mariama	TURÉ	ESTudante	Sandjal	Tel No:	
					Fax No:	
					Cell No:	
					E-mail:	
					Signature:	
Mr	Maimuna	Seidi	ESTudante	Sandjal	Tel No:	
					Fax No:	
					Cell No:	
					E-mail:	
					Signature:	
Mr	Djana	Samican	ESTudante	Sandjal	Tel No:	
					Fax No:	
					Cell No:	
					E-mail:	
					Signature:	
Mr	Aida	Damfa	ESTudante	Sandjal	Tel No:	
					Fax No:	
					Cell No:	
					E-mail:	
					Signature:	
Mr	Bana	Mancal	ESTudante	Sandjal	Tel No:	
					Fax No:	
					Cell No:	
					E-mail:	
					Signature:	

Titulo	Nome	Apelido	Organização (por favor, não use siglas)	Endereço	Contacto	
Mr	Fanta	Camará	ESTUdanTE	Sandjal	Tel No:	
					Fax No:	
					Cell No:	
					E-mail:	
					Signature:	
Mr	ANSARA	camará	ESTUdanTE	Sandjal	Tel No:	
					Fax No:	
					Cell No:	
					E-mail:	
					Signature:	
Mr	SONA	Mancal	ESTUdanTE	Sandjal	Tel No:	
					Fax No:	
					Cell No:	
					E-mail:	
					Signature:	
Mr	Malam	Mané	Lavrador	Sandjal	Tel No:	
					Fax No:	
					Cell No:	
					E-mail:	
					Signature:	
Mr	Fodé	Camara	Lavrador	Sandjal	Tel No:	6386598
					Fax No:	
					Cell No:	
					E-mail:	
					Signature:	

PROJECTO DE FOSFATO DE FARIM. AVALIAÇÃO DE IMPACTO SOCIAL E AMBIENTAL (ESIA) PARA GB MINERALS.

REGISTO DE PRESENÇAS

Reunião : TAMBATU COMMUNITY
Data : 10 DECEMBER 2013
Local : COMMUNITY MEETING PLACE

Titulo	Nome	Apelido	Organização (por favor, não use siglas)	Endereço	Contacto	
Mr	Carl	Nicholas	Golder Associates (UK)	1Alie street, London E1 8DE,UK	Tel No:	00447814143523
					Fax No:	00442074230941
					Cell No:	00447814143523
					E-mail:	CNicholas@golder.com
					Signature:	
Mr	Queba	Sabó	Lavrador	Tanbato	Tel No:	608.38 93
					Fax No:	
					Cell No:	
					E-mail:	
					Signature:	
Mr	Malam	Sisse	Lavrador	Tanbato	Tel No:	
					Fax No:	
					Cell No:	
					E-mail:	
					Signature:	

Titulo	Nome	Apelido	Organização (por favor, não use siglas)	Endereço	Contacto	
Mr	MUSIATA	SISSE	Lavrador	Tanbatô	Tel No:	
					Fax No:	
					Cell No:	
					E-mail:	
					Signature:	
Mr	Lamine	KEITA	Lavrador	Tanbatô	Tel No:	5941089
					Fax No:	
					Cell No:	
					E-mail:	
					Signature:	
Mr	Né	Dabó	Lavrador	Tanbatô	Tel No:	
					Fax No:	
					Cell No:	
					E-mail:	
					Signature:	
Mr	ROQUE	TURÉ	PRODUTORA do Sol	Tanbatô	Tel No:	
					Fax No:	
					Cell No:	
					E-mail:	
					Signature:	
Mr	Cadja	INDjai	Lavrador	Tanbatô	Tel No:	5894005
					Fax No:	
					Cell No:	
					E-mail:	
					Signature:	

Titulo	Nome	Apelido	Organização (por favor, não use siglas)	Endereço	Contacto	
Mr	Mariama	Sisse	(Famos) F Lavradora	Tanbaio	Tel No:	
					Fax No:	
					Cell No:	
					E-mail:	
					Signature:	
Mr	ALima	sisse	Lavradora	Tanbaio	Tel No:	
					Fax No:	
					Cell No:	
					E-mail:	
					Signature:	
Mr	Cumba	Sisse	Produciora do Sal (salt)	Tanbaio	Tel No:	
					Fax No:	
					Cell No:	
					E-mail:	
					Signature:	
Mr	Aua	INdjai	Lavradora	Tanbaio	Tel No:	
					Fax No:	
					Cell No:	
					E-mail:	
					Signature:	
Mr	Mariama	Sanzame	Lavradora	Tanbaio	Tel No:	
					Fax No:	
					Cell No:	
					E-mail:	
					Signature:	

Titulo	Nome	Apelido	Organização (por favor, não use siglas)	Endereço	Contacto	
Mr	BINTA	KEITA	Lavradora	Tanbatô	Tel No:	
					Fax No:	
					Cell No:	
					E-mail:	
					Signature:	
Mr	ARFAN	Sisse	Calpinteiro Carpenter	Tanbatô	Tel No:	
					Fax No:	
					Cell No:	
					E-mail:	
					Signature:	
Mr	MUSSA	Dabó	Pedreiro Builder master	Tanbatô	Tel No:	
					Fax No:	
					Cell No:	
					E-mail:	
					Signature:	
Mr	Bala	sisse	Lavrador	Tanbatô	Tel No:	
					Fax No:	
					Cell No:	
					E-mail:	
					Signature:	
Mr	Sidi	Dabó	Pedreiro Builder	Tanbatô	Tel No:	6259906
					Fax No:	
					Cell No:	
					E-mail:	
					Signature:	

Titulo	Nome	Apelido	Organização (por favor, não use siglas)	Endereço	Contacto	
Mr	Braima	Sisse	Lavrador	Tonbatô	Tel No:	6474477
					Fax No:	
					Cell No:	
					E-mail:	
					Signature:	
Mr	Idrissa	Dabó	Lavrador	Tonbatô	Tel No:	
					Fax No:	
					Cell No:	
					E-mail:	
					Signature:	
Mr	Sutí	Sisse	Estudante	Tonbatô	Tel No:	
					Fax No:	
					Cell No:	
					E-mail:	
					Signature:	
Mr	Adjé	Dabó	Lavrador	Tonbatô	Tel No:	5814157
					Fax No:	
					Cell No:	
					E-mail:	
					Signature:	
Mr	Fodé	Indjai	Estudante Student	Tonbatô	Tel No:	
					Fax No:	
					Cell No:	
					E-mail:	
					Signature:	

Titulo	Nome	Apelido	Organização (por favor, não use siglas)	Endereço	Contacto	
Mr	Sadjo	Sisse	Estudante	Tanbato	Tel No:	
					Fax No:	
					Cell No:	
					E-mail:	
					Signature:	
Mr	Tumane	Sisse	Estudante	Tanbato	Tel No:	
					Fax No:	
					Cell No:	
					E-mail:	
					Signature:	
Mr	Queba	Dabó	Estudante	Tonbato	Tel No:	
					Fax No:	
					Cell No:	
					E-mail:	
					Signature:	
Mr	Zé	Sisse	Lavrador	Tonbato	Tel No:	
					Fax No:	
					Cell No:	
					E-mail:	
					Signature:	

Titulo	Nome	Apelido	Organização (por favor, não use siglas)	Endereço	Contacto	
Mr	Lassana	INDjai	Lavrador	Tanbatô	Tel No:	9271810
					Fax No:	
					Cell No:	
					E-mail:	
					Signature:	
Mr	MaLam	sisse	Lavrador	Tanbatô	Tel No:	
					Fax No:	
					Cell No:	
					E-mail:	
					Signature:	
Mr	Banba	sisse	Lavrador	Tanbatô	Tel No:	6123417
					Fax No:	
					Cell No:	
					E-mail:	
					Signature:	
Mr	Sadjo	INDjai	Lavrador	Tanbatô	Tel No:	9266287
					Fax No:	
					Cell No:	
					E-mail:	
					Signature:	
Mr	ABulai	INDjai	Lavrador	Tanbatô	Tel No:	6732703
					Fax No:	
					Cell No:	
					E-mail:	
					Signature:	

Titulo	Nome	Apelido	Organização (por favor, não use siglas)	Endereço	Contacto	
Mr	Iamado	TURÉ	Lavrador	Tanbatô	Tel No:	
					Fax No:	
					Cell No:	
					E-mail:	
					Signature:	
Mr	Baba	Sisse	Lavrador	Tanbatô	Tel No:	6345672
					Fax No:	
					Cell No:	
					E-mail:	
					Signature:	
Mr	ABU	SISSE	Lavrador	TQNBATÔ	Tel No:	6634216
					Fax No:	
					Cell No:	
					E-mail:	
					Signature:	
Mr	Malam	INDJAI	Lavrador	Tqnbatô	Tel No:	6812361
					Fax No:	
					Cell No:	
					E-mail:	
					Signature:	
Mr	MaLam	Sisse	Lavrador	Tanbatô	Tel No:	
					Fax No:	
					Cell No:	
					E-mail:	
					Signature:	

Titulo	Nome	Apelido	Organização (por favor, não use siglas)	Endereço	Contacto	
Mr	Mama	Dabó	Fisherman pesca	Tanbatô	Tel No:	
					Fax No:	
					Cell No:	
					E-mail:	
					Signature:	
Mr	MUSSA	Sisse	Lavrador	Tanbatô	Tel No:	6814923
					Fax No:	
					Cell No:	
					E-mail:	
					Signature:	
Mr	Sutí	Indjai	Lavrador	Tanbatô	Tel No:	9208005
					Fax No:	
					Cell No:	
					E-mail:	
					Signature:	
Mr	Malam	Dabó	Lavrador	Tanbatô	Tel No:	
					Fax No:	
					Cell No:	
					E-mail:	
					Signature:	
Mr	ANSSumane	Sisse	Lavrador	Tanbatô	Tel No:	6408469
					Fax No:	
					Cell No:	
					E-mail:	
					Signature:	

Titulo	Nome	Apelido	Organização (por favor, não use siglas)	Endereço	Contacto	
Mr	Bemba	TURÉ	Lavrador	Tanbatô	Tel No:	
					Fax No:	
					Cell No:	
					E-mail:	
					Signature:	
Mr	Lamine	INdjai	Lavrador	Tanbatô	Tel No:	
					Fax No:	
					Cell No:	
					E-mail:	
					Signature:	
Mr	Djacanco	Darame	Lavradora	Tanbatô	Tel No:	
					Fax No:	
					Cell No:	
					E-mail:	
					Signature:	
Mr	Cosa	KEÏTA	Lavradora	Tanbatô	Tel No:	
					Fax No:	
					Cell No:	
					E-mail:	
					Signature:	
Mr	Udé	& Seidi	Lavradora	Tanbatô	Tel No:	
					Fax No:	
					Cell No:	
					E-mail:	
					Signature:	

Titulo	Nome	Apelido	Organização (por favor, não use siglas)	Endereço	Contacto	
Mr	Issumane	Sisse	Bulldozer Master pedreiro	Tanbatō	Tel No:	57285 39
					Fax No:	
					Cell No:	
					E-mail:	
					Signature:	
Mr	BINTa	Sisse	Lavradora	Tanbatō	Tel No:	
					Fax No:	
					Cell No:	
					E-mail:	
					Signature:	
Mr	BINTa	Dabé	Lavradora	Tanbatō	Tel No:	
					Fax No:	
					Cell No:	
					E-mail:	
					Signature:	
Mr	Zé	Sisse	Lavradora	Tanbatō	Tel No:	9098766
					Fax No:	
					Cell No:	
					E-mail:	
					Signature:	

Titulo	Nome	Apelido	Organização (por favor, não use siglas)	Endereço	Contacto	
Mr	SONA	Dabó	Lavradora	Tanbatô	Tel No:	
					Fax No:	
					Cell No:	
					E-mail:	
					Signature:	
Mr	AMido	Sisse	Alfaiate Tecelor	Tanbatô	Tel No:	66498425
					Fax No:	
					Cell No:	
					E-mail:	
					Signature:	
Mr	Mariama	Sisse	Estudante	Tanbatô	Tel No:	
					Fax No:	
					Cell No:	
					E-mail:	
					Signature:	
Mr	AMINA	TURÉ	Lavradora	TONBATÔ	Tel No:	
					Fax No:	
					Cell No:	
					E-mail:	
					Signature:	
Mr	BINTA	INDJAI	Lavradora	TONBATÔ	Tel No:	
					Fax No:	
					Cell No:	
					E-mail:	
					Signature:	

Titulo	Nome	Apelido	Organização (por favor, não use siglas)	Endereço	Contacto	
Mr	Fatumata	Sisse	Lavradora	Tanbato	Tel No:	
					Fax No:	
					Cell No:	
					E-mail:	
					Signature:	
Mr	Mariama	TURÉ	Lavradora	Tanbato	Tel No:	
					Fax No:	
					Cell No:	
					E-mail:	
					Signature:	
Mr	IÉNEN	KEITA	Lavradora	tanbato	Tel No:	6223813
					Fax No:	
					Cell No:	
					E-mail:	
					Signature:	
MR	Binta	Curé	Lavrador	tanbato	Tel No:	
					Fax No:	
					Cell No:	
					E-mail:	
					Signature:	
MR	Binta	Sabo	Lavrador	Tanbato	Tel No:	
					Fax No:	
					Cell No:	
					E-mail:	
					Signature:	

Titulo	Nome	Apelido	Organização (por favor, não use siglas)	Endereço	Contacto	
Mr	Binta	KEITA	Lavradora	Tanbatô	Tel No:	
					Fax No:	
					Cell No:	
					E-mail:	
					Signature:	
Mr	Suncar	INDJAI	Lavradora	Tanbatô	Tel No:	
					Fax No:	
					Cell No:	
					E-mail:	
					Signature:	
Mr	Fatu	KEITA	Lavradora	Tanbatô	Tel No:	
					Fax No:	
					Cell No:	
					E-mail:	
					Signature:	
Mr	Tonbon	TURÉ	Lavradora	Tanbatô	Tel No:	
					Fax No:	
					Cell No:	
					E-mail:	
					Signature:	
Mr	Binta	SISSE	ESTUDANTE	Tanbatô	Tel No:	
					Fax No:	
					Cell No:	
					E-mail:	
					Signature:	

As a global, employee-owned organisation with over 50 years of experience, Golder Associates is driven by our purpose to engineer earth's development while preserving earth's integrity. We deliver solutions that help our clients achieve their sustainable development goals by providing a wide range of independent consulting, design and construction services in our specialist areas of earth, environment and energy.

For more information, visit golder.com

Africa	+ 27 11 254 4800
Asia	+ 86 21 6258 5522
Australasia	+ 61 3 8862 3500
Europe	+ 356 21 42 30 20
North America	+ 1 800 275 3281
South America	+ 56 2 2616 2000

solutions@golder.com
www.golder.com

Golder Associates (UK) Ltd
1 Alie Street
London
E1 8DE
UK
T: [+44] (0) 20 7423 0940

Golder Associates

APPENDIX 1-G3

PUBLIC CONSULTATION REPORT (ECO PROGRESSO 2015)

(17 Pages)

O-PROGRESSO
BINETE DE ESTUDOS DE AVALIAÇÃO AMBIENTAL

REPORT OF THE FIRST DAY OF PUBLIC CONSULTATION

Farim, 27th MaY 2015

Editor: Eco-progresso

As part of the Environmental and Social Impact Assessment for the Farim phosphate project, the public consultation, entrusted to the Eco-progresso cabinet was started May 27, 2015 in Farim. This is the first of series of public consultations that was planned with the approval of GB Mineral according to the following schedule:

Plan of the public consultation

DATE	***ACTIVITIES***	***TARGET***	***OBSERVATIONS***
27/05/2015	Presentation of the mining project and recording concerns.	Governor and his staff; academic groups (teachers of schools)	
30/05/2015	Presentation of the mining project and recording concerns.	Administrators of sectors of Oio Region	
01/06/2015	Presentation of the mining project and recording concerns.	Local communities	
02/06/2015	Presentation of the mining project and recording concerns.	Local communities	
03/06/2015	Presentation of the mining project and recording concerns.	Local communities	

This first consultation was to target local state authorities and representatives of education. The team of Eco-Progresso, charged with this task was composited by Mr Alexandre Cabral, Antonio Pansau N'dafá and Georges Sebastian Boissy. We left Bissau to Farim and arrived at 10:40 at the edge of Mr Alexandre Cabral vehicle. There, the team was greeted by Baba, GB mineral that led us to governance. On site, it was an opportunity for us to speak with the Governor and his staff for a short presentation and a briefing of the reason for our coming to Farim (picture 1). Pansau and George retreated afterwards to go and prepare the meeting room at the premises of GB Mineral (house2). Unfortunately this place was not available, electricity fault. Thus the meeting was held at the premises of governance even from 12.30. It began with the projection of the slide on the Farim phosphate project with the presentation of Mineral GB (image 2), phosphate operate, the project (facilities, benefits, impacts). It was then the opportunity to make available to the public all necessary information about the project with a printed version of the slide that was distributed to

the participants. At 2:15 p.m. the presentation ended and this was the time when the public took the floor to speak in relation to what has been said (picture 3). For about 1 hour of time various stakeholders took the floor and spoke of various concerns and suggestions which were all rated by the team of Eco Progresso. After all interventions the Governor also spoke (picture 4). In the end, Mr Cabral concludes with a brief speech the meeting that ends around 15:00.
The meeting was generally well appreciated by the participants and was successful.
This first visit was also an opportunity for the three investigators selected (image 5) to take cognizance of the information they themselves will be responsible for disseminating the levels of the localities involved in the project. Also it was presented to them, the records that will collect all the people's reactions and other necessary information (attendance list)
After all this, the team of Eco-Progresso took the road to Bissau where we arrived at around 18pm.

Images of the first public consultation (27th May, 2015)

Image 1

Image 2

Image 3

Image 4

Image 5: three local communicators chosen for the public consultation

REPORT OF THE SECOND PUBLIC CONSULTATION

30/05/2015, Farim

Editor : Eco-Progresso

Public Consultation/Mining Project of Phosphate of Farim
May 2015

This Saturday, May 30th, 2015 held the second session of public consultation in Farim. It brought together mainly government officials from across the region Oio, namely the representatives of Bissora sectors Nhacra, Mansoa, Mansaba and Farim. Were also represented, mineral GB, the NGO NADEL. Having left Bissau, at 8am, the team of Eco-Progresso, composed of Mr. Cabral, Mr. Pansua, Mr. Boissy, the driver and a fourth communicator, arrived on site at 10am and went directly into local governance. We have been first received by Mr. Paulo Mango, Regional Secretary of Oio. Before the public consultation Mr. Mango made the presentation of all those present at the meeting. Then the public consultation began with the projection of the slide by Mr. Cabral. Participants received the printed version of the slide (11 copies) as support in order to in turn disseminate information about the project. After this presentation, a break was marked to allow participants to refresh and take the air for ten minutes. The second part was the time for participants to give their impressions of what was presented to them. The subjects that were most stressed during these exchanges were the jobs issue and that of the company taxation. This caused some confusion but the team of Eco-Progresso and Rigo, come to represent GB Mineral wished to clarify. On the issue of employment, it was clarified that the 500 jobs in Farim positions are not reserved exclusively for people of Farim, but were open to any person fulfilling the conditions. However a preference would be given to people of Farim and Oio region in general when they fulfill the required conditions. Regarding the taxes paid by GB Mineral, these are intended for the state and not directly to the people who are in the project area. This is the state that is responsible for managing these taxes. The details of the different interventions and the attendance list were identified and will be included in the report of the public consultation.

The villages to which Eco-Progresso intended to do public consultations were planned to discuss with local authorities on how best to consolidate and share with them. The discussion ended at 14h with the speech of the Regional Secretary. And all those present to this public consultation were invited to the meal which was supported by Eco-Progresso, then the team left Farim at 15h to Bissau.

Images of the public consultation

Interview with the Regional Secretary

Introduction and presentation by the Regional Secretary

Public Consultation/Mining Project of Phosphate of Farim
May 2015

Presentation of the project

Interventions of participants

Meal with all participants

ECO-PROGRESSO
CABINETE DE ESTUDOS DE AVALIAÇÃO AMBIENTAL

REPORT OF THE PUBLIC CONSULTATION OF THE POPULATION OF THE PROJECT AREA

10-11/06/2015

Editor: Eco-Progresso

Always in order to diffuse information about the mining project, ECO-PROGRESSO, charged to do this task has continued meetings with local populations. The approach was the same with last public consultations (see the report of 01 to 03/06/2015).

Our first destination was the area of the port of Chugue, and after that, some villages that are in the mining area. Details of these meetings are reported in the following schedule:

Date	Location	Villages	Number of Participants	Comments
10/06/2015	Encone	Encone; Cunteda; Aroté; Abana	37	N'Raga was put in the group of the road area villages because it's in front of the road
11/06/2015	Caurundin	Cancenha Caurundin	22	
	Saliquenhe Ba	Saliquenhe Ba	9	
	Saliquenhe Porto	Saliquenhe Porto; Ponta Caiero; Demba Baio	8	The village of Cabiceque was invited to the meeting but it was absent

The main concerns of populations are almost the same:

- Loss of lands and houses: agriculture and forest resources are their only source of subsistence and they are preoccupied by the way they will be compensated for in case they will have to move in another place.
- When the project will be installed, they hope their young people will find job and it will have development in their localities: schools and hospitals.
- Populations are tired to listen to the same speech and not seeing anything realized.

Images of the public consultation

Encone

Caurundin

Salquenhe Ba

Salequenhe Porto

Public Consultation/Mining Project of Phosphate of Farim
May 2015

SUMMARY OF THE MISSION ON THE PUBLIC CONSULTATION IN FARIM, MANSABA AND MANSOA

June 2015

INTRODUCTION / BACKGROUND

Under the contract signed between the ECO PROGRESS and Go MINERALS, to conduct additional studies and in accordance with the provisions of Article 4, paragraph d) of Decree - Law No 10/2010 of 24 September, we continued public consultation on phosphate mining project of Farim on 12 and 13 June of this year, in Farim, Mansaba and Mansoa. To meet stakeholders in the Oio region by putting more emphasis on the Farim sector, the ECO-PROGRESS team moved Bissau to Farim and met at the headquarters of NADEL NGO, with representatives NGOs, associations, churches and community, radio stations. Participated in the meeting, representatives of wrestlers, of NGO Nadel, ECO, AFAS, AFA-K, AMIC, RAFAF And Ajub-AMA, LSEE, the Association FAMM APROSAL and representatives of Djalicunda radios, Bombolom-FM, Sol Mansi and national radio.
Before starting the presentation on the Farim phosphate exploration project of the Company GB Minerals, technical coordinator of activities of ECO-PROGRESSO, engineer Alexandre Cabral, began to acknowledge and thank the presence of all. After that, he spoke of the project, addressing the court proceedings, whether at the international, regional and sub-national. The engineer Alexandre Cabral, in his explanation to the public, detailed the positive and negative impacts of the project, thus showing the interest to inform, raise awareness, to listen, finally, to involve all parties to the process Farim phosphate exploitation.

After the presentation of the project, a list was opened for those who have questions, opinions or suggestions.

The concerns were:

-How allow lands get the salt?

-How the cemeteries will be treated?

-What is the project expected regarding health facilities in intervention areas?

-Where will families be resettled? And how does this happen?

Suggestions:

- It was suggested more education / information at the level of the surrounding villages, so people are more informed. Indeed, given the low literacy rate in the project areas, it is important to communicate with many people so that they can know well the project.
- It was also suggested the organization of the population at the regional level regarding issues

relating to the project. Thus, there will be a more effective communication between the project, the population and the regional authorities.

13/06/2015 morning, the ECO-PROGRESSO delegation, went to Mansaba, specifically, the State Committee for Mansaba and proceeded in the same way, but this time with more attention on road traffic and phosphate transport. We talked a lot about the risks and dangers of phosphate transport, noise caused by the movement of vehicles, children, animals, young and elderly people crossing the road, etc. The meeting was attended by Ansu Seidi (village chief Mansaba) DAMMIT Seidi (village chief Calinque Mandinga), Mamadou Touré (village chief Bironqui) Bubacar Seidi (Régulo of Mansaba), Alberto Nbunhe (Administrator Secretary) and Silvestre Drame (Mansaba sector administrator).

When the presentation of ECO-PROGRESSO was over, the team thanked the people present. People suggested that the transport of ore is done at night, from 9:00 p.m. to 6:00 pm to reduce the risk. They also promised to convey what they heard to the rest of the population. Then the delegation went to the radio Djalicunda facilities where a debate was held in Creole. After the debate, the team traveled to Mansôa, at the seat of the State Committee to Mansoa. It also adopted the same approach as that used to Mansaba. The meeting was attended by Lords Mamadu Duganda (village representative of Cureini) Serifo Mané (in charge of Dugal section), Orlando N'cuc Clode (Rossum Committee), Agostinho Marques (Chairman of the Committee Cutia) Toni Fernandes Binto (assistant SOMEC Committee), Calisto MESTE (first Fanhe committee) and Iongó Camara (Cussac Committee). When the time came to present their views / questions / suggestions, all were unanimous in accepting that, for the good of all, it would be best to define the period of the night is better for the transport of ore in order to reduce major hazards and risks. They promised to forward the information received to their respective villages, especially to children, youth, pet owners, etc.

EXHIBITS

Attendance List and Photo Gallery


12.06.2015 16:22


12.06.2015 16:27


12.06.2015 16:44


13.06.2015 09:02


13.06.2015 09:04


12.06.2015 16:35


13.06.2015 09:13


13.06.2015 09:47


13.06.2015 10:40


13.06.2015 13:19


13.06.2015 13:21