ANNEX 27

ALTO MAIPO SUB-STATION

1 GENERAL

A high-voltage sub-station is a group of equipment that altogether allows connecting high voltage lines that add or tap power and which upon failure of any of the lines is possible to disconnect as to allow the remaining operative parts to continue under normal operation as to prevent an interruption in the supply. In general there are two types of sub-stations:

1.1 “OPEN SPACE"

Consists of a large enclosed yard where the equipment for power supply interrupt of each line is installed (referred to as high voltage switches) as well as all equipment associated with their operation such as:

- current transformers which indicates the power flow running through a line;
- voltage transformers which indicates existence, magnitude, and phase of the voltage in the line,
- tripping devices which allow to physically isolate the line as to service it.
- lightning arresters intended to capture undesired high voltages due to lightning hitting the conductors as to prevent damages to the rest of the equipment,

Lines reach the sub-station through one of the pieces of equipment described also referred to as “line section-” The sub-station also includes a number of supporting structures for the high voltage conductors connecting all high voltage lines reaching the sub-station as well as all equipment previously mentioned.

Also, a number of other equipment running at low voltage intended for supervision, control, communication, and relevant protection that enable a safe operation of the sub-station. This equipment is installed inside a building next to the high voltage yard.

1.2. “GIS” (GAS INSULATED SWITCHGEAR)

This type of substations consists of compact equipment similar to the previous example but restricted to metal pipes filled with a highly insulating gas. This allows a sub-station with the same characteristics of an open space sub-station but with physical dimensions amounting to 15% of the surface area used by an open space power plant of the same characteristics.

The equipment is placed indoors as to separate it from the environment and high voltage conductors of the respective power lines reach it. Adjacent to the same building or as part thereof another construction is added where low voltage to control the sub-station will be placed. The installation will have the same characteristics than those used for the open space power sub-station.

ALTO MAIPO SUB-STATION

Alto Maipo sub-station will be located in the left hand side of Colorado river and has the following coordinates N: 6.287.130 E: 380.170 (Datum WGS 1984). It is a "GIS" sub-station with 220,000 Volts rated voltage and nine voltage sections:

- Two line sections to connect the generators in Alfalfal II Power plant.
- Two line sections to connect the generators in Las Lajas Power plant.
- Two line sections to connect the two high voltage lines to the Central Interconnected Grid (SIC).
- One line section to connect a simple circuit line interconnecting the sub-station and Alfalfal power plant
- A bar coupling section as the sub-station will have a double internal connection system (double bar) as to facilitate operations and servicing.
- An ancillary section for bar measuring and grounding

2.1. GENERAL DATA:

Rated voltage	245 kV
Bar rated voltage	2000 A
Coupling voltage:	2000 A
Voltage of bypass	2000 A
Cutoff power:	40 kA
Wiring diagram:	Double bar with coupled switch
Installation	Internal

2.2. LAYOUT:

- 7 Line cells, two with cable output and five with overhead output
- 1 Bar trunking cell
- 1 Rating and ground ancillary cell

2.3 COMPONENTS PER LINE SECTION

- 2 sections of collection bar
- 2 motor driven line breakers for collection bar
- 1 ground line breaker upstream power switch, motor driven
- 1 spring operated power switch
- 1 ground line breaker downstream power switch, motor driven
- 1 voltage transformer (3 cores)
- 1 motor driven line breaker
- 1 fast ground line breaker, motor driven
- 3 one phase voltage transformers
- 1 set of cable connecting modules (only Las Lajas power plant circuits)
- 1 overhead set of bars and bushings
- 1 separate control cabinet for mounting facing the cell.

2.4 COMPONENTS OF COLLECTION BARS COUPLING CELLS (COUPLING SWITCH)

- 2 sections of collection bar
- 2 motor driven line breakers for collection bar
- 1 ground line breaker upstream power switch, motor driven
- 1 spring operated power switch
- 1 ground line breaker downstream power switch, motor driven
- 3 voltage transformer (3 cores)
- 1 separate control cabinet for mounting facing the cell.

2.5. COMPONENTS OF COLLECTION BARS MEASURING CELLS AND GROUND

- 2 sections of collection bar
- 3 one phase voltage transformer, bar 1
- 3 one phase voltage transformer, bar 2
- 1 ground line breaker, motor driven, bar 1
- 1 ground line breaker, motor driven, bar 2

2.6. CONTROL ROOM EQUIPMENT:

- Bench with batteries and chargers
- Telecontrol and protection equipment
- Teleprotection equipment
- Sub-station level control system (UCI).
- Direct and alternating current dashboards

2.7 EXTERNAL FACILITIES

- Transformer for Auxiliary services
- Power unit
- Lightning arrester
- Cable tray for 220 kW lines from Las Lajas power plant

The drawing attached illustrates dimensions and characteristics of Alto Maipo sub-station.

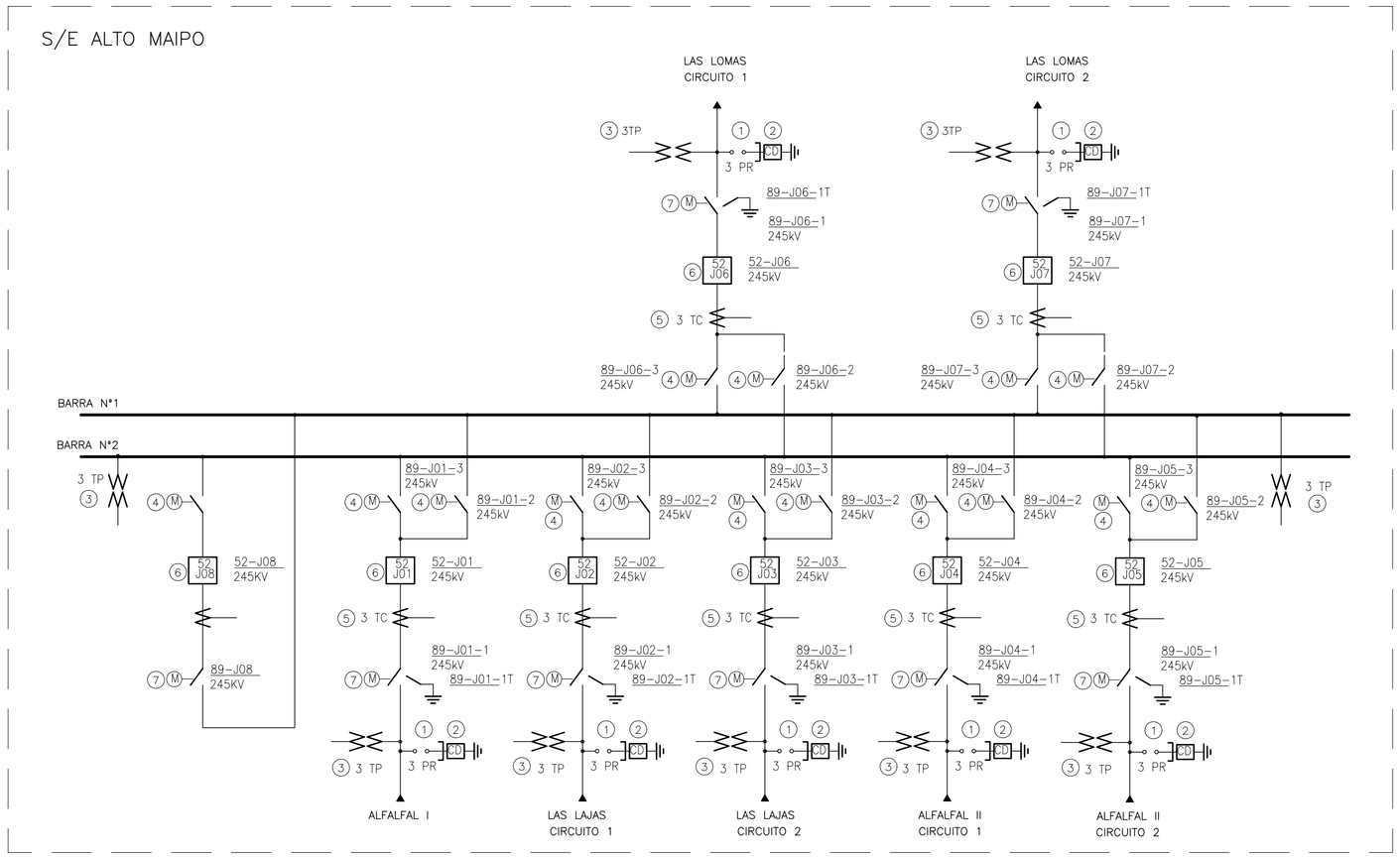

DIAGRAMA UNILINEAL

DOBLE BARRA
CON INTERRUPTOR ACOPLADOR

SUBESTACION ALTO MAIPO

ESC. 1:500
EMPLAZAMIENTO
SISTEMA GIS

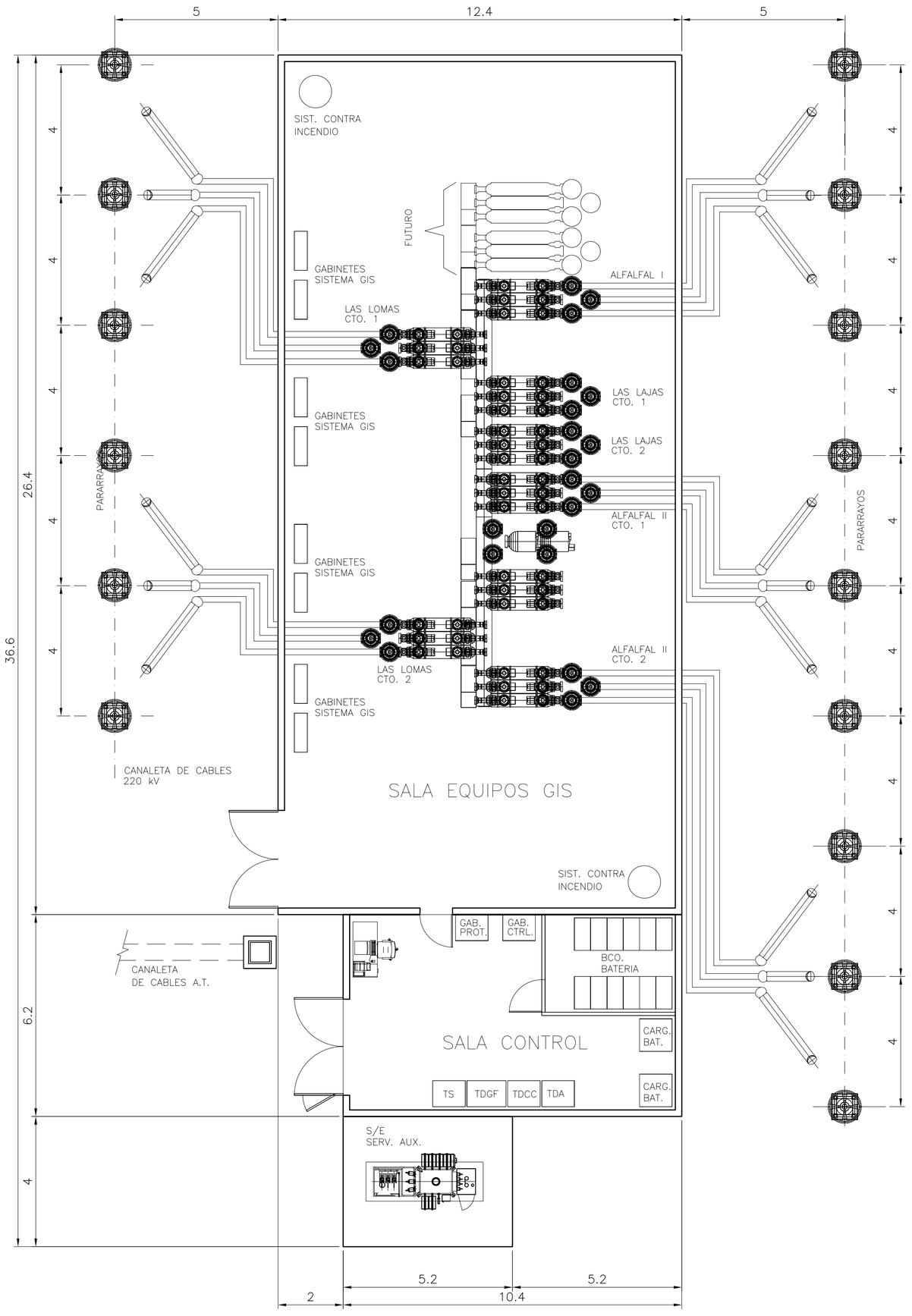

SALA DE EQUIPOS GIS Y SALA DE CONTROL

ESC. 1:100

LISTA DE EQUIPO BASICO 220 kV

ITEM	CANT.	DESIGNACION	MARCA	TIPO
1	21	PARARRAYOS 192 kV		
2	7	CONTADOR DE DESCARGA PARARRAYOS		
3	27	TRANSF. DE POTENCIAL 230 kV		
4	16	DESCONECT. HORIZONTAL 245 kV-S.P.T.		
5	24	TRANSF. DE CORRIENTE 220 kV		
6	8	INTERRUPTOR 245 kV REC. TRIPOLAR		
7	7	DESCONECT. HORIZONTAL 245 kV-C.P.T.		

REFERENCIAS / ESTANDARES

NUMERO	DESCRIPCION
CHL195491,92,93	REF. SEG. SIEMENS O.T. GIS 8DN9 220kV
020-LT-PLA-035	ALTERNATIVA GIS CON MUFAS

SIMBOLOGIA

EMISIONES

EMI	FECHA	DESCRIPCION	PROY	REV	APR	APR
D	15/05/08	Para Aprobación	SM	AA	EW	RB/AL
C	22/01/08	Aprobación y Comentarios	SM	AA	EW	RB/AL
B	04/01/08	Coordinación Interna	SM	AA	EW	RB/AL
A	03/01/08	Para Información	SM	AA	EW	RB/AL

REVISIONES

REV	FECHA	DESCRIPCION	PROY	REV	APR	APR
C	15/05/08	Corrige Nombre de Rio	SM	AA	EW	RB/AL
B	22/01/08	Modifica Salida Aérea	SM	AA	EW	RB/AL
A	03/01/08	Diseño Conceptual	SM	AA	EW	RB/AL

Gener una empresa AES

PROYECTO
HIDROELECTRICO ALTO MAIPO
INGENIERIA BASICA

cade-idepe · POCH Ingeniería · Norconsult

AREA 020 — ESTUDIOS BASICOS DISEÑO CONCEPTUAL

TITULO
S/E ALTO MAIPO
ESQUEMA DOBLE BARRA C/INT. ACOPLADOR
ALTERNATIVA GIS CON BUSHING

ESCALA		NOMBRE	FIRMA	FECHA
Indicadas	PROY.	SM		02-01-08
	REV.	AA		02-01-08
	APR.	EW		02-01-08
	APR.	RB/AL		02-01-08

No PLANOS GCAM: 020-LT-PLA-036 — REV. C

EMISION N° · FECHA EMISION $DATE$ · HORA $TIME$