# ANNEX 8
# EMERGENCY DISCHARGE INTO THE EL YESO RIVER

## 1.1 INTRODUCTION

The Alto Maipo system consists of two hydropower plants operating in a hydraulic series. Each power plant has a pressure tunnel system for feeding the turbines (two units in each power plant).

In the case of the El Alfalfal II Power Plant, an intake well allows the water from the El Volcán tunnel and from the El Yeso River to be drawn into the power plant's pipeline. The tunnel running from the intake well joins the head tunnel by a system of pressure pipes until it joins with the shaft that communicates with the surge shaft, located immediately upstream of the pressure pipe that feeds the two generation units.

At the EL Yeso River water intake, there will be emergency sluices and an emergency discharge structure that will make it possible to evacuate flows from the water intake and the El Volcán tunnel into the El Yeso River.

## 1.2 AQUEDUCT DISCHARGING INTO THE EL YESO RIVER

An aqueduct discharging into the El Yeso River, to be located in the conveyance to the intake well, 400 m downstream of the collection point, has been envisaged and will be called El Yeso Norte aqueduct.

The discharge structure basically consists of a stepped spillway energy dissipation system that is fed by the operation of two sluice type valves that remain closed during the normal operation of the El Alfalfal II Power Plant. The valves are placed inside a 2.5 diameter, 5 m long circular steel pipe upstream of the stepped spillway (See Drawing 020-HI-PLA-025).

The water collection works, on the other hand, are located some 700 m downstream of the stilling basin of the El Yeso Reservoir, and their purpose is to catch the flow from the El Yeso River to convey it to the El Yeso Norte aqueduct. In general terms, the water collection structure consists of a side-water intake, with a concrete faced spillway wall and two sluice gates. In addition, a Parshall-type water flow meter is envisaged to be constructed right past the water intake.

Figure 1.1 shows a plan view of the water collection works.

**Figure 1.1**
**Location of El Yeso Collection Works Upstream of the Discharge Structure**

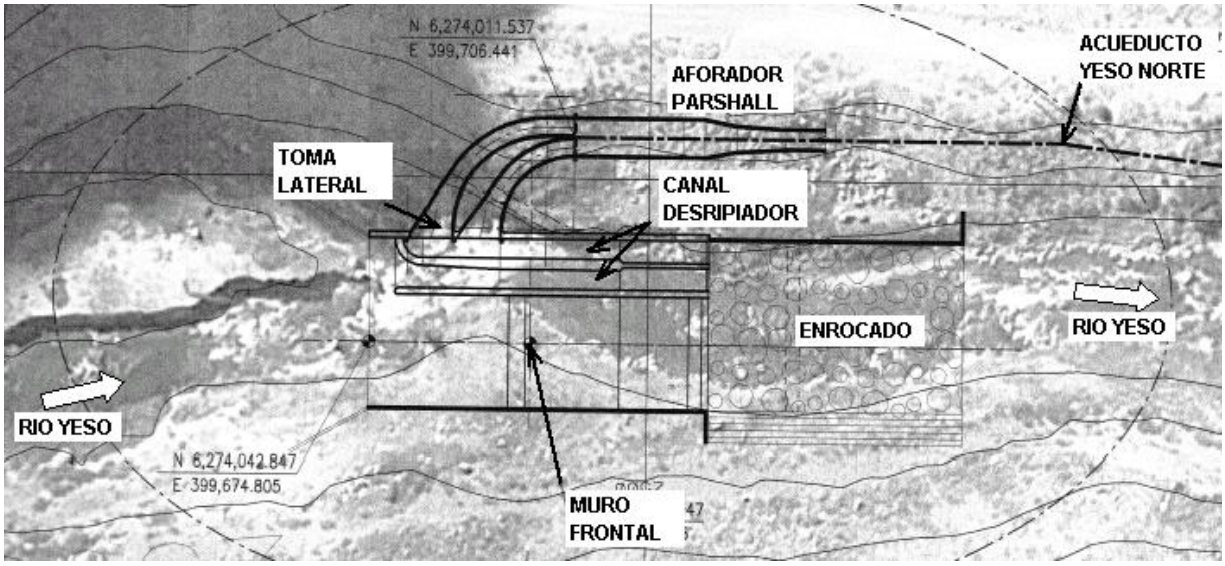


The geometrical slope of the stepped spillway of the discharge structure is approximately 10 m, with a 6 m width and a peak unit flow rate **q** = 4.5 $m^3/s/m$. The total length of the discharge structure is 63 m.

When the valves of this structure open up, the water level in the intake well immediately drops lower than the threshold of the weir discharging into the pipe that crosses the El Yeso River; thus, the flow from the El Volcán tunnel is conveyed towards the outlet discharging into the river rather than into the steel pipe that crosses the El Yeso River. In this manner, the stretch of the El Yeso conveyance pipe located between the El Alfalfal II intake well and this discharge structure operates in the reverse direction than normal in case the emergency discharge structure is operated.

## 1.3 DESIGN FLOWS

Table 3.1 shows the design flows considered for the El Yeso River, i.e. the maximum collection flow rate, and a flow with an 80% probability of exceedance, in order to check the hydraulic profile for low flow conditions.

**Table 1.1**
**Design Flows for El Yeso Collection Works**

| FLOW RATE | Q (m/s) |
|---|---|
| Maximum Collection Flow Rate | 15 |
| Flood | 80 |
| 80% Exceedance Probability | 3.4 |

It should be noted that the flood flow rate taken into consideration was based on the maximum operating flow rate for reservoir delivery, as recommended by a study by the former Dirección de Riego (Irrigation Department).

### 1.3.1 Schematic Hydraulic Profile of the Works

Figures 1.2 and 1.3 show the schematic hydraulic profiles from the water intake to the discharge into the El Yeso Norte aqueduct, for both maximum flow rate values.

**Figure 1.2**
**Schematic Hydraulic Profile Q = 15 m$^3$/s**

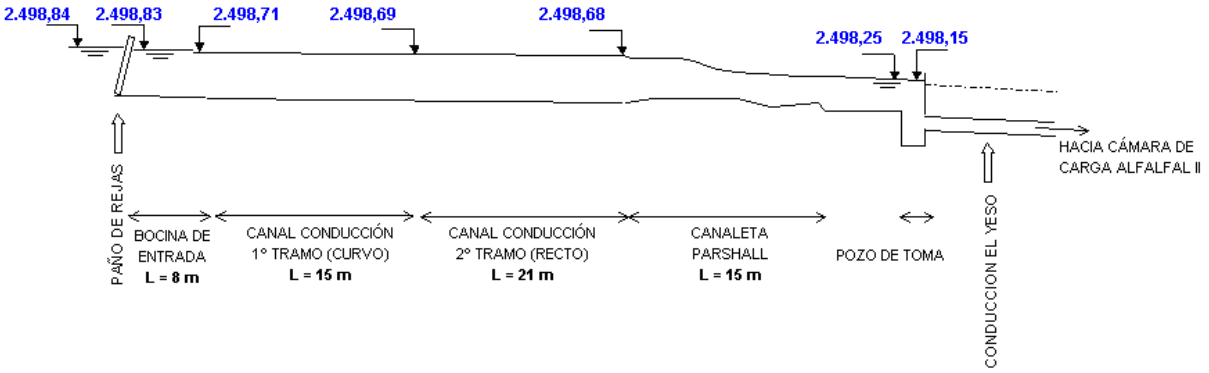


**Figure 1.3**
**Schematic Hydraulic Profile Q = 3.4 m$^3$/s**

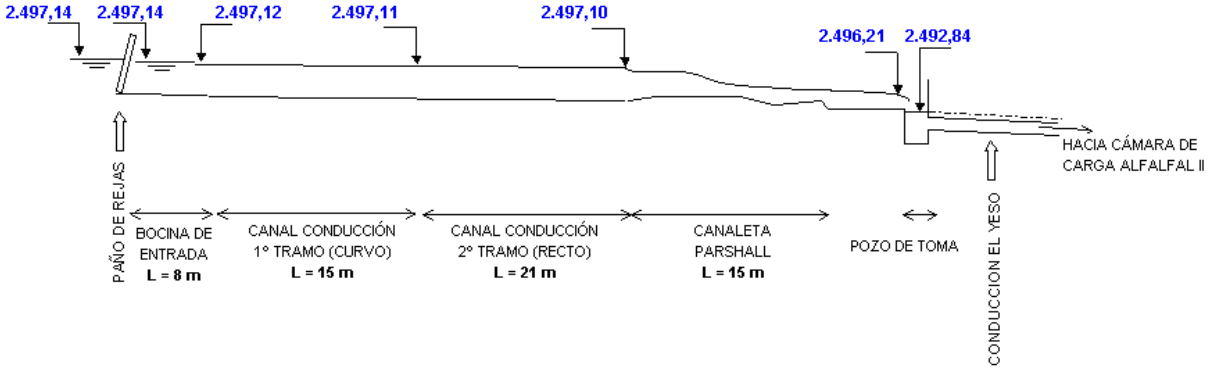

In the discharge zone into the El Yeso River, consolidated rock fill will be employed for river channel slope protection, as defined in the final engineering design.

# PROYECTO HIDROELECTRICO ALTO MAIPO

# BASIC ENGINEERING

CONTRACT AM-CO304

## LAS LAJAS POWER PLANT
## COLORADO RIVER HYDRAULIC AXIS
## LAS PUERTAS SECTOR, VL-2 BRIDGE

| | | | | | | | |
|---|---|---|---|---|---|---|---|
| | | | | | | | |
| A | 13-12-07 | Internal Coordination | R. Saraiva | A. Ugarte / H. Mery | E. Woolvett | R. Bennewitz / A. Lyngra | |
| ISSUED | DATE | PURPOSE OF ISSUE | PREPARED BY | REVIEWED BY | APPROVED BY General Coordinator | APPROVED BY Project D. Asst D. | APPROVED BY AES GENER Project Lead |

CONSULTANTS

cade-idepe POCH Ingeniería Norconsult

**REVISION**

A

**No. 020-HI-INF-013**

# TABLE OF CONTENTS


| ITEM | CONTENTS | PAGE |
|---|---|---|
| 1. | INTRODUCTION | 1 |
| 2. | PURPOSE AND SCOPES | 2 |
| 3. | CALCULATION BASES | 3 |
| 3.1 | Hydraulic Axis on Natural Channels | 3 |
| 3.2 | Flood Flows | 5 |
| 3.3 | Channel Cross Sections | 5 |
| 3.4 | Roughness Coefficients | 7 |
| 3.5 | Border Conditions | 10 |
| 4. | RESULTS | 11 |
| 4.1 | Hydraulic Axis in a Natural (No Bridge) Situation | 11 |
| 4.2 | Hydraulic Axis in the Future (with Bridge) Situation | 15 |
| 5. | CONCLUSIONS | 16 |

ANNEX 1: Hydraulic Axis, No Bridge Situation

## 1. INTRODUCTION

The Las Lajas Power Plant will use the resources available in the upper part of the Colorado River basin, downstream of the EL Alfalfal I Power Plant, along with the water flow from the future El Alfalfal II Power Plant, in order to meet the total design flow of 65 m³/s. The water flow from the El Alfalfal I Power Plant –along with the water flows from the intermediate basin of the Colorado River, collected at the water intake of the Maitenes Channel– will be stored in a forebay.

The construction of the tailrace tunnel envisages an access road to the VL-2 construction window; the road is to cross the Colorado River in the Las Puertas sector by a 30 m long 6 m wide bridge (see drawing 20-CA-PLA-028).

.

Figure 1.1: General diagram of the works of the Las Lajas Power Plant.

## 2. PURPOSE AND SCOPES

The purpose of this report is to present the results obtained from the calculation of the Colorado River hydraulic axis, in the so-called Las Puertas zone, where the VL-2 Bridge is to be located. The hydraulic levels will help to define the minimum elevation of the bridge platform, as well as influence of the bridge on the hydraulic axis of the channel under natural conditions.

# 3. CALCULATION BASES

## 3.1 Hydraulic Axis on Natural Channels

The calculation of the hydraulic axis on a river (non-prismatic channel) is the determination of the free surface along the channel based on its characteristics, e.g. geometrical features, riverbed and river bank roughness, and flow rates.

The Colorado River hydraulic axis has been calculated using the U.S Army Corps of Engineers' software program called HEC-RAS 3.1.3 (2005), which solves the energy balance equation (Ec. 3.1.1) by means of the standard step method.

$$h_2 + Z_2 + \frac{\alpha_2 V_2^2}{2g} = h_1 + Z_1 + \frac{\alpha_1 V_1^2}{2g} + h_e \qquad \text{(Ec.3.1.1)}$$

Where:

| | | |
|---|---|---|
| $h_i$ | : | Height in section i |
| $Z_i$ | : | Bottom level in section i |
| $\alpha_i$ | : | Coriolis coefficient in section i |
| $V_i$ | : | Velocity in section i |
| he | : | Head loss |

In this case, the water level in a section "i" is $Z_{hi}$:

$$Z_{hi} = h_i + Z_i \qquad \text{(Ec.3.1.2)}$$

The head loss ($h_e$) between two sections is the loss by friction plus the loss by contraction or expansion (singular losses). The head loss equation is as follows:

$$h_e = \langle J \rangle \cdot L + C \cdot \left| \frac{\alpha_2 V_2^2}{2g} - \frac{\alpha_1 V_1^2}{2g} \right| \qquad \text{(Ec.3.1.3)}$$

Where:

| | | |
|---|---|---|
| <J> | : | Head loss slope between the two cross sections |
| L | : | Distance between cross sections |
| $\alpha_i$ | : | Coriolis coefficient in section i |
| $V_i$ | : | Velocity in section i |
| C | : | Contraction or expansion head loss coefficient |

Contraction and expansion coefficients depend on the nature of the transition. In general terms, transitions or geometric changes along a natural channel are gradual; therefore, no high head losses are incurred. According to the literature, an expansion coefficient of 0.3 and a contraction coefficient of 0.1 are recommended for gradual transitions. In the case of contractions caused by structures such as bridges and sewers, the recommended coefficients for expansion and contraction are 0.5 and 0.3, respectively.

For the calculation of frictional losses, the program uses the method called “Average Conveyance Equation”. It is expressed by the following equation:

$$< J > = \left( \frac{2Q}{K_1 + K_2} \right)^2 \qquad \text{(Ec.3.1.4)}$$

$$K = \frac{A \cdot R^{2/3}}{n} \qquad \text{(Ec.3.1.5)}$$

Where:

| | | |
|---|---|---|
| $K_i$ | : | Conveyance coefficient in section i |
| R: | : | Hydraulic radius |
| n | : | Manning’s roughness coefficient |

The head loss slope in each section is calculated using Manning’s equation.

$$Q = \frac{\sqrt{J}}{n} \cdot R^{2/3} \cdot A = \sqrt{J} \cdot K \qquad \text{(EC.3.1.6)}$$

## 3.2 Flood Flows

The flow rates used for calculating the hydraulic axis are part of the flood studies that were conducted for designing the project works. Table 3.2.1 shows the flood flows for the zone under study, for various return periods.

Table 3.2.1: Flood Flows in the Colorado River, Downstream of the Junction with the Del Medio Stream

| Tr (years) | Flow Rate ($m^3/s$) |
|---|---|
| 2 | 220 |
| 5 | 350 |
| 10 | 470 |
| 25 | 660 |
| 50 | 850 |
| 100 | 1080 |
| 200 | 1.350 |

## 3.3 Channel Cross Sections

Based on the 1:1,000 scale topographical mapping made by Geoexploraciones (2006) for the project, twenty-two (22) cross section profiles along each channel have been obtained for the zone where the bridge will be located. The hydraulic study considered an overall length of approximately 400 m, of which 200 m are upstream and 200 m are downstream of the bridge.

Figure 3.3.1 shows the cross section profiles considered in the calculation of hydraulic axes.

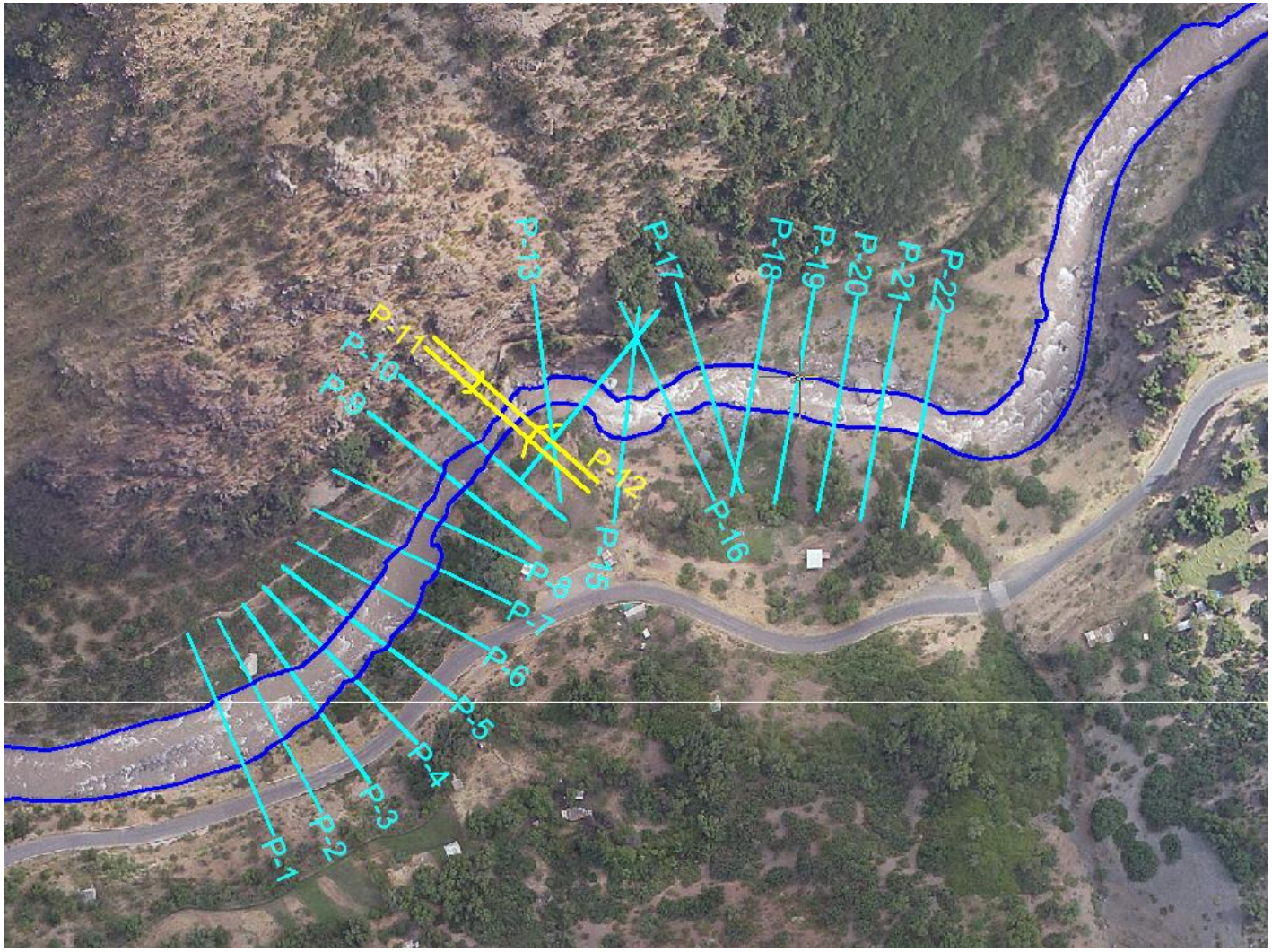


Figure 3.3.1: Location of cross section profiles for the bridge over the Colorado River (VL-2 Access).

## 3.4 Roughness Coefficients

The Colorado River in the stretch under study exhibits a granular bed with extended gross grain size characteristics, with a well-defined main channel, low presence of curves and scanty vegetation on its banks.

Initially, Cowan's method was used to estimate the roughness of the main channel and of the flood zones on the river banks. The expression to determine Manning's coefficient is as follows:

$$n = (n_0 + n_0 + n_0 + n_0)m_5 \qquad \text{(Ec.3.4.1)}$$

Where:

- $n_0$ : Base roughness coefficient for a straight, uniform and smooth channel
- $n_1$ : Degree of irregularity in the section
- $n_2$ : Variation in the cross section
- $n_3$ : Effect of obstructions
- $n_4$ : Presence of vegetation
- $m_5$ : Correction factor for meandering

The results obtained are shown in the following table:

Table 3.4.1: Colorado River Roughness Coefficients according to Cowan's Method

| Coefficient | Right Bank | Main Channel | Left Bank |
|---|---|---|---|
| $n_0$ | 0.028 | 0.028 | 0.028 |
| $n_1$ | 0.010 | 0.005 | 0.010 |
| $n_2$ | 0.005 | 0.005 | 0.005 |
| $n_3$ | 0.010 | 0.000 | 0.010 |
| $n_4$ | 0.005 | 0.005 | 0.005 |
| $m_5$ | 1.000 | 1.000 | 1.000 |
| n | 0.058 | 0.043 | 0.058 |

On the other hand, according to Ugarte, A. and M. Madrid (1994), the roughness coefficient of the main channel can be calculated based on the diameters typical of the bed material. These researchers propose the following equations:

$$n = \frac{\left(0 \cdot D_{50\%}\right)^{1/6}}{21} \qquad \text{(Ec.3.4.2)}$$

$$n = \frac{\left(3{,}4 \cdot D_{84\%}\right)^{1/6}}{21} \qquad \text{(Ec.3.4.3)}$$

The hydraulic study of the Colorado River used particle size data from two river channel points: at the mouth of the Colorado River, and upstream of the junction with the Olivares River. Table 3.4.2 shows the diameters typical of the channel at the points mentioned above and the values of n when equations 3.4.2 and 3.4.3 are applied.

Table 3.4.2: Calculated Roughness Coefficients

| Point | $D_{50\%}$ (mm) | n ($D_{50\%}$) | $D_{84\%}$ (mm) | n ($D_{84\%}$) |
|---|---|---|---|---|
| Colorado River mouth | 66.9 | 0.045 | 217.4 | 0.045 |
| Colorado R. upstream of junction with the Olivares R. | 88.8 | 0.047 | 189.5 | 0.044 |

When the values of the roughness coefficient for the main channel were averaged, the result was n= 0.045, which is practically identical to the one obtained with Cowan's method; it is also consistent with the values mentioned in "Roughness Characteristics of Natural Channels" by the U.S Geological Survey, Water Supply, paper 1849, 1967.

Table 3.4.3 shows values for the Manning coefficient based on measurements taken in the field by Madrid, M. (1992) in the Colorado River.

Table 3.4.3: Experimental Values of n in the Colorado River

| Channel | Q (m³/s) | A (m²) | Vm (m/s) | P (m) | L (m) | Rh (m) | Fd | J (m/m) | n Values Measured |
|---|---|---|---|---|---|---|---|---|---|
| Colorado R. mouth | 74 | 26.61 | 2.78 | 18.91 | 17.2 | 1.41 | 0.71 | 0.0100 | 0.0452 |
| | 24 | 15.86 | 1.51 | 16.64 | 15.6 | 0.95 | 0.48 | 0.0090 | 0.0607 |
| | 66.3 | 23.67 | 2.80 | 18.45 | 16.2 | 1.28 | 0.74 | 0.0105 | 0.0432 |
| | 45 | 20.95 | 2.15 | 17.86 | 16.2 | 1.17 | 0.60 | 0.0097 | 0.0510 |
| Colorado R. upstream of junction with the Olivares R. | 18 | 12.95 | 1.39 | 32.44 | 32.2 | 0.40 | 0.70 | 0.0161 | 0.0495 |
| | 52.52 | 23.15 | 2.27 | 37.14 | 36.7 | 0.62 | 0.91 | 0.0146 | 0.0389 |
| | 47.9 | 22.42 | 2.14 | 35.60 | 35.1 | 0.63 | 0.85 | 0.0146 | 0.0416 |
| | 28.5 | 16.02 | 1.78 | 33.80 | 33.2 | 0.47 | 0.82 | 0.0160 | 0.0432 |

The coefficients obtained at the mouth of the Colorado River, i.e. the zone lying closest to the stretch under study, are close to those determined through the semi-empirical methods employed earlier for the highest flow rates.

In the case of the Colorado River, upstream of the junction with the Olivares River, the values for n show lesser dispersion than in the case above. However, at both points, the values measured in the field are similar to the calculated values; in view of this it is valid to assume the following values of the roughness coefficient for calculating the hydraulic axis:

| | | n |
|---|---|---|
| Main channel | : | 0.045 |
| Flood plains (scanty vegetation) | : | 0.055 |

## 3.5 Border Conditions

To calculate the hydraulic axis, in addition to geometrical and flow rate data, border conditions should be established according to the hydraulic controls existing in the channel under analysis.

In the event of a river runoff, the border condition is set from downstream upwards, while a torrent flow is conditioned from upstream downwards.

A mixed runoff has been assumed in this analysis, which means that two border conditions –one upstream and one downstream– are required. The condition inputted in the HEC-RAS in both cases was the normal runoff elevation, the calculation of which requires that slope data be fed into the software.

# 4. RESULTS

## 4.1 Hydraulic Axis in a Natural (No Bridge) Situation

Figure 4.1.1 shows a longitudinal profile with the results obtained from the Colorado River hydraulic axis in the Las Puertas sector, in the zone where the access bridge to the VL-2 window will be located, for a flow rate equivalent to Tr=100 years. Detailed results are shown in Annex 1.

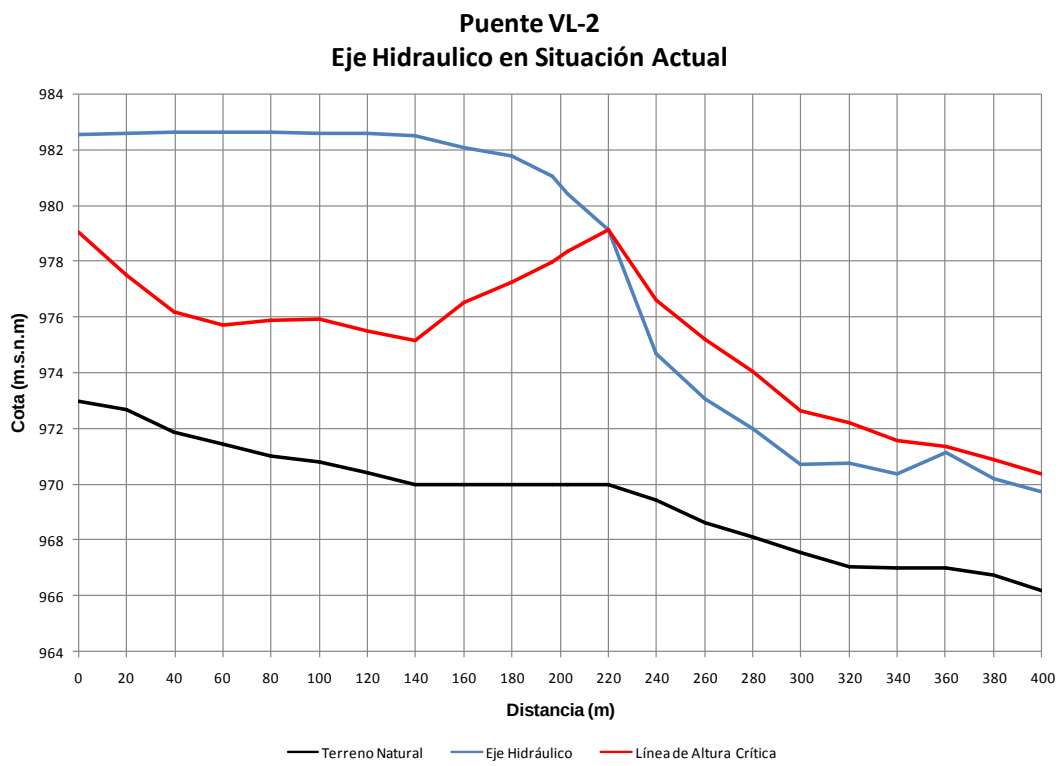


Figure 4.1.1: Colorado River hydraulic axis, Las Puertas sector. No bridge situation.

The results point to the existence of a hydraulic control that produces a crisis in profile 10 (x=220 m), causing a torrent downstream and a calm flow regime upstream.

Table 4.1.1 summarizes runoff levels and elevations in the stretch under analysis. It may be seen in Figure 3.3.1 that the bridge would be located between profiles 11 and 12, where the hydraulic axis reaches a maximum elevation of 981.07 masl.

According to the project's design recommendations, the bridge platform should be placed one meter above the maximum level of the hydraulic axis, that is, at an elevation of 982 masl.

Table 4.1.1: Results for Tr=100 Years

| Profile | X (m) | ZH (masl) | H (m) | Critical ZH (masl) | Critical H (m) |
|---|---|---|---|---|---|
| 1 | 400 | 969.74 | 3.54 | 970.40 | 4.20 |
| 2 | 380 | 970.23 | 3.47 | 970.89 | 4.13 |
| 3 | 360 | 971.16 | 4.16 | 971.38 | 4.38 |
| 4 | 340 | 970.38 | 3.38 | 971.59 | 4.59 |
| 5 | 320 | 970.75 | 3.68 | 972.21 | 5.14 |
| 6 | 300 | 970.71 | 3.13 | 972.63 | 5.05 |
| 7 | 280 | 972.02 | 3.89 | 974.03 | 5.90 |
| 8 | 260 | 973.09 | 4.46 | 975.20 | 6.57 |
| 9 | 240 | 974.68 | 5.25 | 976.60 | 7.17 |
| 10 | 220 | 979.12 | 9.12 | 979.12 | 9.12 |
| **11** | **203** | **980.43** | **10.43** | **978.38** | **8.38** |
| **12** | **197** | **981.07** | **11.07** | **977.96** | **7.96** |
| 13 | 180 | 981.76 | 11.76 | 977.26 | 7.26 |
| 14 | 160 | 982.08 | 12.08 | 976.52 | 6.52 |
| 15 | 140 | 982.52 | 12.52 | 975.17 | 5.17 |
| 16 | 120 | 982.59 | 12.18 | 975.51 | 5.10 |
| 17 | 100 | 982.60 | 11.78 | 975.94 | 5.12 |
| 18 | 80 | 982.63 | 11.62 | 975.87 | 4.86 |
| 19 | 60 | 982.64 | 11.20 | 975.73 | 4.29 |
| 20 | 40 | 982.61 | 10.75 | 976.18 | 4.32 |
| 21 | 20 | 982.60 | 9.92 | 977.52 | 4.84 |
| 22 | 0 | 982.56 | 9.56 | 979.03 | 6.03 |

Figures 4.1.2 and 4.1.3 show the results for profiles 11 and 12 corresponding to sections located immediately upstream and downstream of the bridge platform. Finally, Figures 4.1.4 and 4.1.5 show the hydraulic axis in the sections located 20 m upstream and 20 m downstream of the bridge (profiles 10 and 13, respectively).

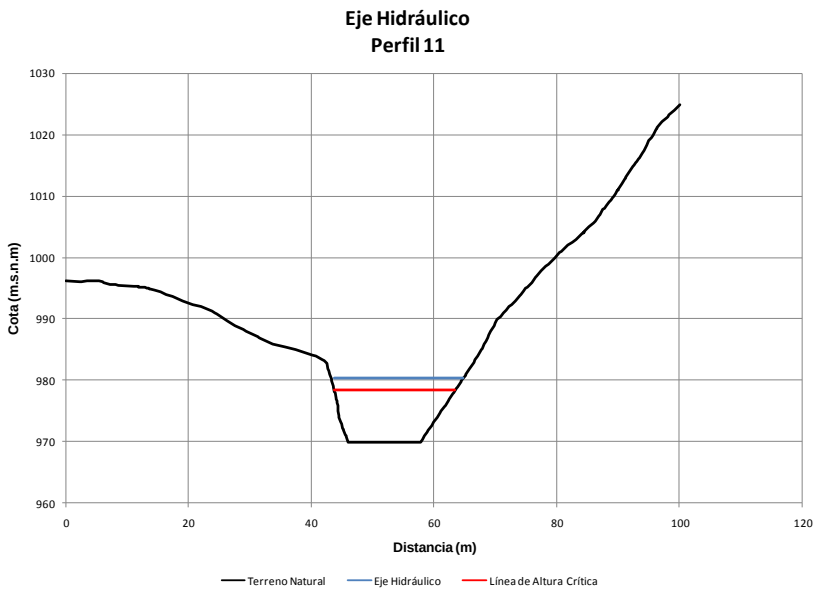


Figure 4.1.2: Results for profile 11

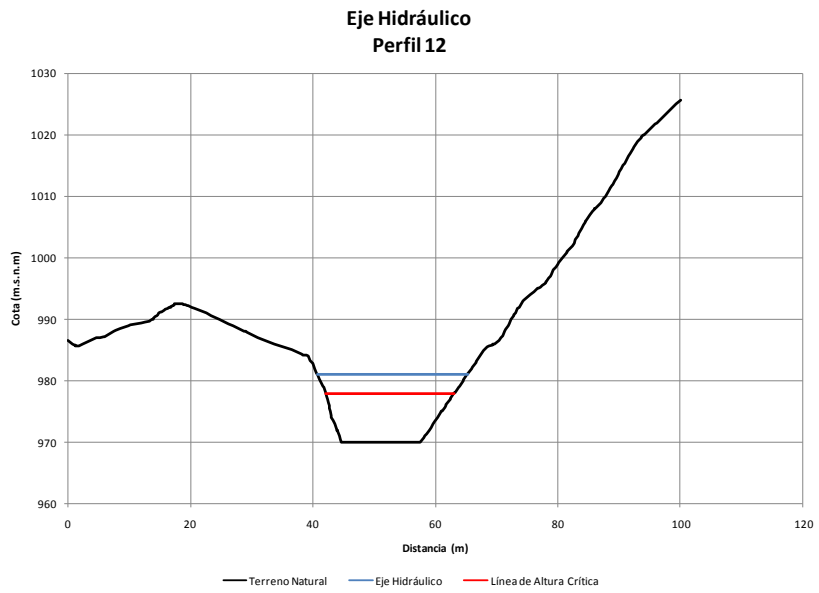


Figure 4.1.3: Results for profile 12

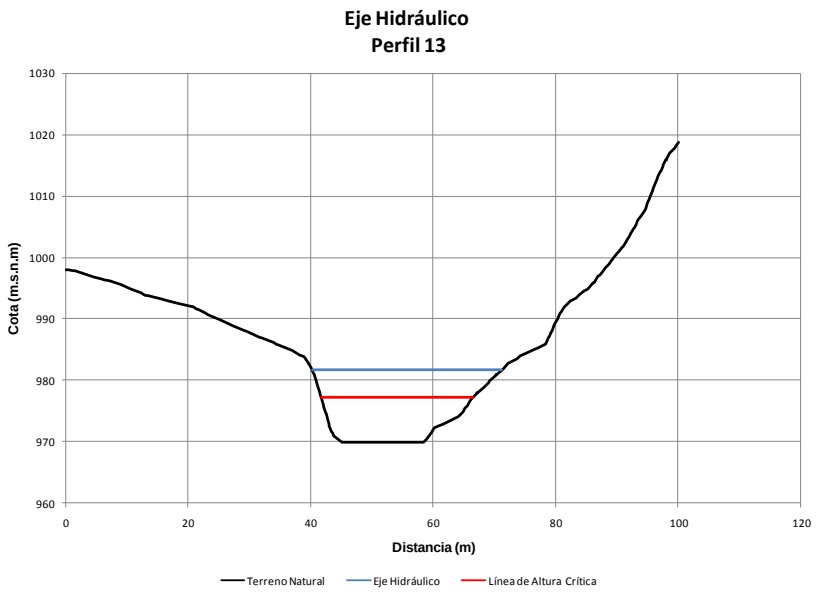


Figure 4.1.2: Results for profile 13

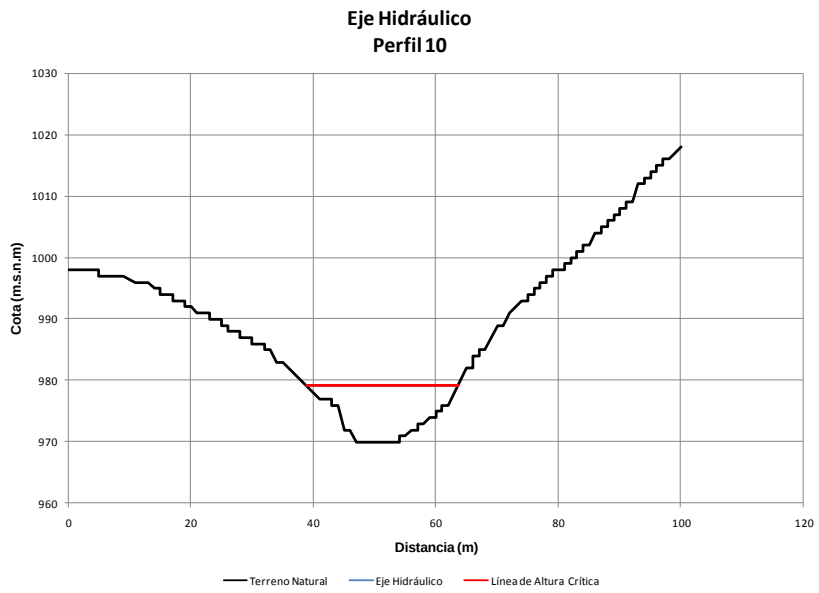


Figure 4.1.2: Results for profile 10

## 4.2 Hydraulic Axis in the Future (with Bridge) Situation

According to drawing 020-CA-PLA-28 the VL-2 Bridge is 30 m long and 6 m wide. The elevation of the bridge platform is 991 masl, while the elevation of the lower beam is 989 masl. According to the calculations presented in the previous section, the bridge freeboard would be some 7 m (with respect to the lower beam). Figure 4.2.1 shows cross profile 11, including the access embankments and the bridge platform.

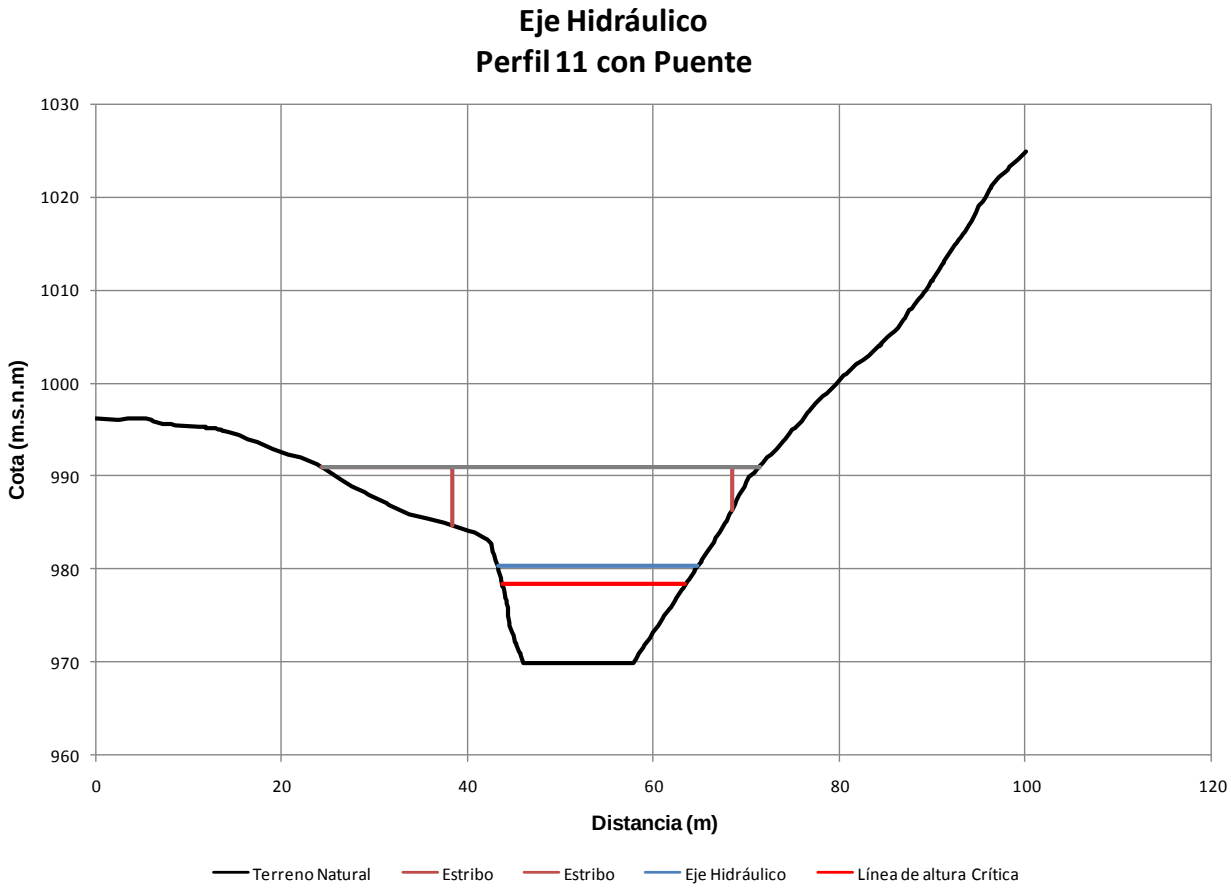


Figure 4.2.1: VL-2 Bridge hydraulic axis (profile 11).

As may be seen in the above figure, the bridge abutments will not obstruct the channel, as they will be founded on rock, outside the channel. Thus, the result of the hydraulic axis in the 'with bridge' situation is equal to that presented in section 4.1 of this report.

## 5. CONCLUSIONS

The results obtained from the calculation of the hydraulic axis on the Colorado River, where an access bridge to the VL-2 window is to be located, makes it possible to determine that the bridge does not alter the river's hydraulic axis under natural conditions.

Finally, according to the preliminary design of the bridge, the lower beam is to be placed some 7 m above the hydraulic axis for a flood with a return period of 100 years (ZH=981.07 masl). This value is far above the recommended minimum, which is 1 m; therefore, the bridge would not be affected during the works construction stage.

# ANNEX 1

## Colorado River Hydraulic Axis
## Las Puertas Sector, VL-2 Bridge
## (No Bridge Situation)

# Table A1.1: Results Colorado River Hydraulic Axis, VL-2 Bridge, Current Situation

| Perfil | X (m) | Tr (años) | Caudal (m³/s) | Z Fondo (m.s.n.m) | Z H (m.s.n.m) | H (m) | Z Energía (m.s.n.m) | Z H Crítica (m.s.n.m) | H Crítica (m) | Z E Crítica (m.s.n.m) | J (m/m) | Velocidad (m/s) | Area Esc. (m²) | Per. Mojado (m) | Radio Hidr. (m) | Ancho Sup. (m) | Nº Froude |
|---|---|---|---|---|---|---|---|---|---|---|---|---|---|---|---|---|---|
| 1 | 400 | 2 | 220 | 966.20 | 968.23 | 2.03 | 968.70 | 968.02 | 1.82 | 968.65 | 0.01131 | 3.01 | 73.01 | 50.71 | 1.44 | 49.70 | 0.79 |
| | | 5 | 350 | 966.20 | 968.73 | 2.53 | 969.38 | 968.48 | 2.28 | 969.34 | 0.01132 | 3.58 | 97.79 | 52.51 | 1.86 | 50.99 | 0.82 |
| | | 10 | 470 | 966.20 | 969.12 | 2.92 | 969.93 | 968.87 | 2.67 | 969.89 | 0.01132 | 3.99 | 117.92 | 53.87 | 2.19 | 51.94 | 0.84 |
| | | 25 | 660 | 966.20 | 969.11 | 2.91 | 970.72 | 969.39 | 3.19 | 970.66 | 0.02267 | 5.62 | 117.35 | 53.84 | 2.18 | 51.92 | 1.19 |
| | | 50 | 850 | 966.20 | 969.41 | 3.21 | 971.49 | 969.88 | 3.68 | 971.35 | 0.02519 | 6.39 | 133.11 | 54.64 | 2.44 | 52.38 | 1.28 |
| | | 100 | 1080 | 966.20 | 969.74 | 3.54 | 972.36 | 970.40 | 4.20 | 972.12 | 0.02743 | 7.16 | 150.77 | 55.53 | 2.72 | 52.89 | 1.35 |
| | | 200 | 1810 | 966.20 | 970.54 | 4.34 | 975.00 | 971.85 | 5.65 | 974.22 | 0.03531 | 9.36 | 193.41 | 57.65 | 3.35 | 54.11 | 1.58 |
| 2 | 380 | 2 | 220 | 966.76 | 968.40 | 1.64 | 969.05 | 968.40 | 1.64 | 969.05 | 0.01864 | 3.57 | 61.59 | 48.21 | 1.28 | 46.68 | 0.99 |
| | | 5 | 350 | 966.76 | 968.88 | 2.12 | 969.76 | 968.88 | 2.12 | 969.76 | 0.01727 | 4.16 | 84.07 | 49.39 | 1.70 | 47.21 | 1.00 |
| | | 10 | 470 | 966.76 | 969.07 | 2.31 | 970.37 | 969.27 | 2.51 | 970.34 | 0.02253 | 5.06 | 92.97 | 49.83 | 1.87 | 47.40 | 1.15 |
| | | 25 | 660 | 966.76 | 969.45 | 2.69 | 971.25 | 969.82 | 3.06 | 971.16 | 0.02509 | 5.94 | 111.08 | 50.66 | 2.19 | 47.69 | 1.24 |
| | | 50 | 850 | 966.76 | 969.82 | 3.06 | 972.04 | 970.33 | 3.57 | 971.89 | 0.02610 | 6.61 | 128.58 | 51.46 | 2.50 | 47.99 | 1.29 |
| | | 100 | 1080 | 966.76 | 970.23 | 3.47 | 972.92 | 970.89 | 4.13 | 972.71 | 0.02663 | 7.27 | 148.64 | 52.41 | 2.84 | 48.40 | 1.32 |
| | | 200 | 1810 | 966.76 | 970.97 | 4.21 | 975.86 | 972.42 | 5.66 | 974.94 | 0.03785 | 9.79 | 184.79 | 54.19 | 3.41 | 49.32 | 1.62 |
| 3 | 360 | 2 | 220 | 967.00 | 968.79 | 1.79 | 969.35 | 968.58 | 1.58 | 969.31 | 0.01170 | 3.32 | 66.35 | 40.96 | 1.62 | 39.31 | 0.81 |
| | | 5 | 350 | 967.00 | 969.16 | 2.16 | 970.11 | 969.12 | 2.12 | 970.11 | 0.01569 | 4.32 | 80.98 | 41.86 | 1.93 | 39.80 | 0.97 |
| | | 10 | 470 | 967.00 | 969.56 | 2.56 | 970.76 | 969.56 | 2.56 | 970.76 | 0.01602 | 4.85 | 96.93 | 42.82 | 2.26 | 40.31 | 1.00 |
| | | 25 | 660 | 967.00 | 970.20 | 3.20 | 971.67 | 970.20 | 3.20 | 971.67 | 0.01508 | 5.37 | 122.86 | 44.49 | 2.76 | 41.33 | 0.99 |
| | | 50 | 850 | 967.00 | 970.75 | 3.75 | 972.48 | 970.75 | 3.75 | 972.48 | 0.01469 | 5.83 | 145.91 | 45.88 | 3.18 | 42.14 | 1.00 |
| | | 100 | 1080 | 967.00 | 971.16 | 4.16 | 973.39 | 971.38 | 4.38 | 973.37 | 0.01677 | 6.61 | 163.34 | 46.90 | 3.48 | 42.71 | 1.08 |
| | | 200 | 1810 | 967.00 | 971.61 | 4.61 | 976.61 | 973.07 | 6.07 | 975.79 | 0.03347 | 9.90 | 182.75 | 48.07 | 3.80 | 43.42 | 1.54 |
| 4 | 340 | 2 | 220 | 967.00 | 969.05 | 2.05 | 969.57 | 968.75 | 1.75 | 969.50 | 0.00982 | 3.19 | 68.95 | 39.55 | 1.74 | 38.28 | 0.76 |
| | | 5 | 350 | 967.00 | 969.64 | 2.64 | 970.38 | 969.30 | 2.30 | 970.31 | 0.01007 | 3.81 | 91.75 | 41.00 | 2.24 | 39.11 | 0.80 |
| | | 10 | 470 | 967.00 | 969.35 | 2.35 | 971.09 | 969.76 | 2.76 | 970.97 | 0.02751 | 5.84 | 80.42 | 40.28 | 2.00 | 38.69 | 1.29 |
| | | 25 | 660 | 967.00 | 969.76 | 2.76 | 972.15 | 970.40 | 3.40 | 971.89 | 0.03062 | 6.84 | 96.45 | 41.32 | 2.33 | 39.33 | 1.39 |
| | | 50 | 850 | 967.00 | 970.06 | 3.06 | 973.20 | 970.97 | 3.97 | 972.72 | 0.03544 | 7.85 | 108.27 | 42.11 | 2.57 | 39.85 | 1.52 |
| | | 100 | 1080 | 967.00 | 970.38 | 3.38 | 974.42 | 971.59 | 4.59 | 973.62 | 0.04021 | 8.90 | 121.30 | 42.95 | 2.82 | 40.37 | 1.64 |
| | | 200 | 1810 | 967.00 | 971.32 | 4.32 | 977.87 | 973.36 | 6.36 | 976.08 | 0.04838 | 11.34 | 159.64 | 45.19 | 3.53 | 41.54 | 1.85 |
| 5 | 320 | 2 | 220 | 967.07 | 969.19 | 2.12 | 969.99 | 969.19 | 2.12 | 969.99 | 0.01762 | 3.96 | 55.62 | 35.82 | 1.55 | 34.65 | 1.00 |
| | | 5 | 350 | 967.07 | 969.63 | 2.56 | 970.87 | 969.79 | 2.72 | 970.85 | 0.02067 | 4.93 | 70.94 | 36.96 | 1.92 | 35.34 | 1.11 |
| | | 10 | 470 | 967.07 | 969.81 | 2.74 | 971.69 | 970.26 | 3.19 | 971.54 | 0.02822 | 6.06 | 77.51 | 37.44 | 2.07 | 35.63 | 1.31 |
| | | 25 | 660 | 967.07 | 970.12 | 3.05 | 972.95 | 970.94 | 3.87 | 972.51 | 0.03688 | 7.46 | 88.44 | 38.24 | 2.31 | 36.11 | 1.52 |
| | | 50 | 850 | 967.07 | 970.41 | 3.34 | 974.16 | 971.55 | 4.48 | 973.38 | 0.04305 | 8.58 | 99.05 | 39.01 | 2.54 | 36.59 | 1.66 |
| | | 100 | 1080 | 967.07 | 970.75 | 3.68 | 975.52 | 972.21 | 5.14 | 974.32 | 0.04804 | 9.67 | 111.66 | 39.90 | 2.80 | 37.13 | 1.78 |
| | | 200 | 1810 | 967.07 | 971.77 | 4.70 | 979.14 | 974.05 | 6.98 | 976.86 | 0.05453 | 12.02 | 150.53 | 42.68 | 3.53 | 38.91 | 1.95 |
| 6 | 300 | 2 | 220 | 967.58 | 968.97 | 1.39 | 970.74 | 969.50 | 1.92 | 970.33 | 0.05786 | 5.90 | 37.28 | 32.13 | 1.16 | 31.44 | 1.73 |
| | | 5 | 350 | 967.58 | 969.33 | 1.75 | 971.94 | 970.13 | 2.55 | 971.22 | 0.06235 | 7.16 | 48.85 | 33.29 | 1.47 | 32.34 | 1.86 |
| | | 10 | 470 | 967.58 | 969.61 | 2.03 | 972.95 | 970.62 | 3.04 | 971.94 | 0.06545 | 8.10 | 58.05 | 34.15 | 1.70 | 32.98 | 1.95 |
| | | 25 | 660 | 967.58 | 969.99 | 2.41 | 974.42 | 971.33 | 3.75 | 972.93 | 0.06954 | 9.33 | 70.77 | 35.25 | 2.01 | 33.77 | 2.06 |
| | | 50 | 850 | 967.58 | 970.33 | 2.75 | 975.76 | 971.95 | 4.37 | 973.81 | 0.07219 | 10.32 | 82.34 | 36.23 | 2.27 | 34.43 | 2.13 |
| | | 100 | 1080 | 967.58 | 970.71 | 3.13 | 977.21 | 972.63 | 5.05 | 974.77 | 0.07374 | 11.30 | 95.60 | 37.32 | 2.56 | 35.19 | 2.19 |
| | | 200 | 1810 | 967.58 | 971.81 | 4.23 | 980.91 | 974.50 | 6.92 | 977.34 | 0.07204 | 13.36 | 135.47 | 40.41 | 3.35 | 37.25 | 2.24 |
| 7 | 280 | 2 | 220 | 968.13 | 970.05 | 1.92 | 971.74 | 970.55 | 2.42 | 971.47 | 0.04298 | 5.76 | 38.17 | 27.28 | 1.40 | 26.31 | 1.53 |
| | | 5 | 350 | 968.13 | 970.44 | 2.31 | 973.08 | 971.25 | 3.12 | 972.47 | 0.05163 | 7.21 | 48.57 | 28.49 | 1.70 | 27.22 | 1.72 |
| | | 10 | 470 | 968.13 | 970.74 | 2.61 | 974.21 | 971.80 | 3.67 | 973.25 | 0.05731 | 8.26 | 56.92 | 29.43 | 1.93 | 27.94 | 1.85 |
| | | 25 | 660 | 968.13 | 971.17 | 3.04 | 975.80 | 972.60 | 4.47 | 974.33 | 0.06275 | 9.54 | 69.19 | 30.84 | 2.24 | 29.05 | 1.97 |
| | | 50 | 850 | 968.13 | 971.57 | 3.44 | 977.18 | 973.28 | 5.15 | 975.28 | 0.06495 | 10.50 | 80.95 | 32.07 | 2.52 | 29.97 | 2.04 |
| | | 100 | 1080 | 968.13 | 972.02 | 3.89 | 978.64 | 974.03 | 5.90 | 976.30 | 0.06568 | 11.40 | 94.75 | 33.46 | 2.83 | 31.03 | 2.08 |
| | | 200 | 1810 | 968.13 | 973.30 | 5.17 | 982.27 | 976.05 | 7.92 | 978.96 | 0.06362 | 13.27 | 136.40 | 37.44 | 3.64 | 34.06 | 2.12 |
| 8 | 260 | 2 | 220 | 968.63 | 970.63 | 2.00 | 972.85 | 971.31 | 2.68 | 972.35 | 0.05276 | 6.61 | 33.30 | 22.62 | 1.47 | 21.64 | 1.70 |
| | | 5 | 350 | 968.63 | 971.09 | 2.46 | 974.38 | 972.11 | 3.48 | 973.47 | 0.05944 | 8.04 | 43.51 | 24.05 | 1.81 | 22.65 | 1.85 |
| | | 10 | 470 | 968.63 | 971.46 | 2.83 | 975.62 | 972.74 | 4.11 | 974.34 | 0.06273 | 9.04 | 52.01 | 25.14 | 2.07 | 23.42 | 1.94 |
| | | 25 | 660 | 968.63 | 971.99 | 3.36 | 977.28 | 973.61 | 4.98 | 975.55 | 0.06456 | 10.19 | 64.78 | 26.73 | 2.42 | 24.56 | 2.00 |
| | | 50 | 850 | 968.63 | 972.50 | 3.87 | 978.60 | 974.38 | 5.75 | 976.60 | 0.06261 | 10.94 | 77.69 | 28.15 | 2.76 | 25.50 | 2.00 |
| | | 100 | 1080 | 968.63 | 973.09 | 4.46 | 979.97 | 975.20 | 6.57 | 977.74 | 0.06002 | 11.62 | 92.91 | 29.78 | 3.12 | 26.58 | 1.98 |
| | | 200 | 1810 | 968.63 | 974.70 | 6.07 | 983.46 | 977.45 | 8.82 | 980.78 | 0.05389 | 13.12 | 137.99 | 34.03 | 4.05 | 29.21 | 1.93 |

Table A1.1: Results Colorado River Hydraulic Axis, VL-2 Bridge, Current Situation (Continued)

| Perfil | X (m) | Tr (años) | Caudal (m³/s) | Z Fondo (m.s.n.m) | Z H (m.s.n.m) | H (m) | Z Energía (m.s.n.m) | Z H Crítica (m.s.n.m) | H Crítica (m) | Z E Crítica (m.s.n.m) | J (m/m) | Velocidad (m/s) | Area Esc. (m²) | Per. Mojado (m) | Radio Hidr. (m) | Ancho Sup. (m) | Nº Froude |
|---|---|---|---|---|---|---|---|---|---|---|---|---|---|---|---|---|---|
| 9 | 240 | 2 | 220 | 969.43 | 971.23 | 1.80 | 974.44 | 972.19 | 2.76 | 973.37 | 0.08099 | 7.93 | 27.73 | 19.73 | 1.41 | 18.22 | 2.05 |
| | | 5 | 350 | 969.43 | 971.85 | 2.42 | 975.91 | 973.08 | 3.65 | 974.65 | 0.07059 | 8.92 | 39.22 | 21.11 | 1.86 | 18.81 | 1.97 |
| | | 10 | 470 | 969.43 | 972.36 | 2.93 | 977.05 | 973.80 | 4.37 | 975.66 | 0.06499 | 9.59 | 49.01 | 22.26 | 2.20 | 19.31 | 1.92 |
| | | 25 | 660 | 969.43 | 973.14 | 3.71 | 978.52 | 974.81 | 5.38 | 977.07 | 0.05758 | 10.28 | 64.17 | 23.96 | 2.68 | 20.01 | 1.83 |
| | | 50 | 850 | 969.43 | 973.86 | 4.43 | 979.76 | 975.71 | 6.28 | 978.30 | 0.05221 | 10.76 | 78.98 | 25.60 | 3.09 | 20.76 | 1.76 |
| | | 100 | 1080 | 969.43 | 974.68 | 5.25 | 981.09 | 976.60 | 7.17 | 979.62 | 0.04788 | 11.22 | 96.27 | 27.47 | 3.50 | 21.68 | 1.70 |
| | | 200 | 1810 | 969.43 | 976.93 | 7.50 | 984.51 | 979.30 | 9.87 | 983.07 | 0.04042 | 12.20 | 148.39 | 32.89 | 4.51 | 24.67 | 1.59 |
| 10 | 220 | 2 | 220 | 970.00 | 973.93 | 3.93 | 975.36 | 973.93 | 3.93 | 975.36 | 0.02148 | 5.30 | 41.47 | 19.95 | 2.08 | 14.41 | 1.00 |
| | | 5 | 350 | 970.00 | 975.08 | 5.08 | 976.84 | 975.08 | 5.08 | 976.84 | 0.02126 | 5.88 | 59.50 | 24.32 | 2.45 | 16.77 | 1.00 |
| | | 10 | 470 | 970.00 | 975.87 | 5.87 | 977.99 | 975.87 | 5.87 | 977.99 | 0.02132 | 6.46 | 72.78 | 25.92 | 2.81 | 16.97 | 1.00 |
| | | 25 | 660 | 970.00 | 977.22 | 7.22 | 979.48 | 977.22 | 7.22 | 979.48 | 0.02066 | 6.66 | 99.05 | 32.87 | 3.01 | 21.83 | 1.00 |
| | | 50 | 850 | 970.00 | 978.14 | 8.14 | 980.71 | 978.14 | 8.14 | 980.71 | 0.01992 | 7.10 | 119.79 | 35.20 | 3.40 | 23.21 | 1.00 |
| | | 100 | 1080 | 970.00 | 979.12 | 9.12 | 982.02 | 979.12 | 9.12 | 982.02 | 0.01938 | 7.54 | 143.31 | 37.69 | 3.80 | 24.69 | 1.00 |
| | | 200 | 1810 | 970.00 | 981.72 | 11.72 | 985.42 | 981.72 | 11.72 | 985.42 | 0.01819 | 8.53 | 212.31 | 44.25 | 4.80 | 28.57 | 1.00 |
| 11 | 203 | 2 | 220 | 970.00 | 975.17 | 5.17 | 975.61 | 973.15 | 3.15 | 974.54 | 0.00381 | 2.96 | 74.36 | 23.48 | 3.17 | 16.86 | 0.45 |
| | | 5 | 350 | 970.00 | 976.46 | 6.46 | 977.13 | 974.21 | 4.21 | 976.03 | 0.00465 | 3.61 | 96.89 | 26.34 | 3.68 | 17.89 | 0.50 |
| | | 10 | 470 | 970.00 | 977.46 | 7.46 | 978.31 | 975.05 | 5.05 | 977.20 | 0.00526 | 4.08 | 115.17 | 28.57 | 4.03 | 18.77 | 0.53 |
| | | 25 | 660 | 970.00 | 978.64 | 8.64 | 979.80 | 976.21 | 6.21 | 978.81 | 0.00639 | 4.79 | 137.92 | 31.21 | 4.42 | 19.88 | 0.58 |
| | | 50 | 850 | 970.00 | 979.54 | 9.54 | 981.05 | 977.25 | 7.25 | 980.22 | 0.00762 | 5.44 | 156.17 | 33.22 | 4.70 | 20.73 | 0.63 |
| | | 100 | 1080 | 970.00 | 980.43 | 10.43 | 982.37 | 978.38 | 8.38 | 981.75 | 0.00908 | 6.17 | 175.07 | 35.22 | 4.97 | 21.56 | 0.69 |
| | | 200 | 1810 | 970.00 | 982.00 | 12.00 | 985.78 | 981.37 | 11.37 | 985.73 | 0.01579 | 8.62 | 210.00 | 38.73 | 5.42 | 23.05 | 0.91 |
| 12 | 197 | 2 | 220 | 970.00 | 975.28 | 5.28 | 975.64 | 972.99 | 2.99 | 974.31 | 0.00286 | 2.65 | 83.04 | 24.96 | 3.33 | 18.46 | 0.40 |
| | | 5 | 350 | 970.00 | 976.64 | 6.64 | 977.16 | 974.01 | 4.01 | 975.73 | 0.00342 | 3.21 | 108.87 | 28.00 | 3.89 | 19.68 | 0.44 |
| | | 10 | 470 | 970.00 | 977.69 | 7.69 | 978.35 | 974.80 | 4.80 | 976.84 | 0.00380 | 3.61 | 130.08 | 30.36 | 4.28 | 20.66 | 0.46 |
| | | 25 | 660 | 970.00 | 978.97 | 8.97 | 979.86 | 975.90 | 5.90 | 978.38 | 0.00450 | 4.20 | 157.32 | 33.30 | 4.72 | 22.05 | 0.50 |
| | | 50 | 850 | 970.00 | 979.99 | 9.99 | 981.12 | 976.88 | 6.88 | 979.73 | 0.00517 | 4.71 | 180.56 | 35.69 | 5.06 | 23.27 | 0.54 |
| | | 100 | 1080 | 970.00 | 981.07 | 11.07 | 982.47 | 977.96 | 7.96 | 981.19 | 0.00585 | 5.23 | 206.35 | 38.20 | 5.40 | 24.54 | 0.58 |
| | | 200 | 1810 | 970.00 | 983.88 | 13.88 | 986.01 | 980.86 | 10.86 | 984.98 | 0.00736 | 6.47 | 279.85 | 44.80 | 6.25 | 27.90 | 0.65 |
| 13 | 180 | 2 | 220 | 970.00 | 975.44 | 5.44 | 975.69 | 972.83 | 2.83 | 974.05 | 0.00186 | 2.21 | 99.75 | 28.58 | 3.49 | 22.82 | 0.34 |
| | | 5 | 350 | 970.00 | 976.87 | 6.87 | 977.22 | 973.80 | 3.80 | 975.33 | 0.00206 | 2.62 | 133.52 | 31.83 | 4.19 | 24.25 | 0.36 |
| | | 10 | 470 | 970.00 | 977.99 | 7.99 | 978.42 | 974.52 | 4.52 | 976.32 | 0.00220 | 2.91 | 161.34 | 34.54 | 4.67 | 25.63 | 0.37 |
| | | 25 | 660 | 970.00 | 979.39 | 9.39 | 979.95 | 975.48 | 5.48 | 977.67 | 0.00248 | 3.33 | 198.45 | 38.05 | 5.22 | 27.54 | 0.40 |
| | | 50 | 850 | 970.00 | 980.53 | 10.53 | 981.22 | 976.34 | 6.34 | 978.87 | 0.00273 | 3.68 | 230.97 | 40.91 | 5.65 | 29.12 | 0.42 |
| | | 100 | 1080 | 970.00 | 981.76 | 11.76 | 982.59 | 977.26 | 7.26 | 980.17 | 0.00297 | 4.03 | 267.73 | 44.04 | 6.08 | 30.92 | 0.44 |
| | | 200 | 1810 | 970.00 | 985.03 | 15.03 | 986.18 | 979.85 | 9.85 | 983.59 | 0.00348 | 4.76 | 379.94 | 54.89 | 6.92 | 39.26 | 0.49 |
| 14 | 160 | 2 | 220 | 970.00 | 975.56 | 5.56 | 975.72 | 972.45 | 2.45 | 973.54 | 0.00110 | 1.80 | 122.11 | 31.99 | 3.82 | 25.74 | 0.26 |
| | | 5 | 350 | 970.00 | 977.03 | 7.03 | 977.27 | 973.29 | 3.29 | 974.70 | 0.00127 | 2.17 | 161.04 | 35.40 | 4.55 | 27.37 | 0.29 |
| | | 10 | 470 | 970.00 | 978.17 | 8.17 | 978.47 | 973.94 | 3.94 | 975.62 | 0.00138 | 2.43 | 193.04 | 38.18 | 5.06 | 28.80 | 0.30 |
| | | 25 | 660 | 970.00 | 979.61 | 9.61 | 980.00 | 974.84 | 4.84 | 976.90 | 0.00160 | 2.79 | 236.40 | 42.41 | 5.57 | 31.59 | 0.33 |
| | | 50 | 850 | 970.00 | 980.80 | 10.80 | 981.29 | 975.63 | 5.63 | 978.03 | 0.00177 | 3.08 | 275.69 | 46.04 | 5.99 | 34.08 | 0.35 |
| | | 100 | 1080 | 970.00 | 982.08 | 12.08 | 982.66 | 976.52 | 6.52 | 979.26 | 0.00191 | 3.37 | 320.90 | 49.74 | 6.45 | 36.58 | 0.36 |
| | | 200 | 1810 | 970.00 | 985.52 | 15.52 | 986.28 | 978.96 | 8.96 | 982.52 | 0.00221 | 3.87 | 467.86 | 65.71 | 7.12 | 50.70 | 0.41 |
| 15 | 140 | 2 | 220 | 970.00 | 975.68 | 5.68 | 975.75 | 972.07 | 2.07 | 972.90 | 0.00038 | 1.12 | 196.66 | 47.77 | 4.12 | 45.05 | 0.17 |
| | | 5 | 350 | 970.00 | 977.21 | 7.21 | 977.29 | 972.71 | 2.71 | 973.79 | 0.00039 | 1.30 | 268.20 | 52.53 | 5.11 | 48.66 | 0.18 |
| | | 10 | 470 | 970.00 | 978.40 | 8.40 | 978.50 | 973.22 | 3.22 | 974.48 | 0.00040 | 1.43 | 327.57 | 55.98 | 5.85 | 51.06 | 0.18 |
| | | 25 | 660 | 970.00 | 979.91 | 9.91 | 980.05 | 973.91 | 3.91 | 975.42 | 0.00042 | 1.62 | 407.33 | 60.53 | 6.73 | 54.41 | 0.19 |
| | | 50 | 850 | 970.00 | 981.17 | 11.17 | 981.34 | 974.51 | 4.51 | 976.25 | 0.00044 | 1.78 | 477.94 | 64.46 | 7.42 | 57.41 | 0.20 |
| | | 100 | 1080 | 970.00 | 982.52 | 12.52 | 982.71 | 975.17 | 5.17 | 977.13 | 0.00047 | 1.94 | 557.63 | 68.72 | 8.11 | 60.71 | 0.20 |
| | | 200 | 1810 | 970.00 | 986.08 | 16.08 | 986.35 | 976.89 | 6.89 | 979.50 | 0.00052 | 2.28 | 794.17 | 82.68 | 9.61 | 72.29 | 0.22 |
| 16 | 120 | 2 | 220 | 970.41 | 975.69 | 5.28 | 975.75 | 972.69 | 2.28 | 973.50 | 0.00049 | 1.12 | 196.06 | 57.30 | 3.42 | 55.12 | 0.19 |
| | | 5 | 350 | 970.41 | 977.23 | 6.82 | 977.30 | 973.36 | 2.95 | 974.33 | 0.00041 | 1.23 | 284.14 | 62.48 | 4.55 | 59.14 | 0.18 |
| | | 10 | 470 | 970.41 | 978.42 | 8.01 | 978.51 | 973.84 | 3.43 | 974.93 | 0.00038 | 1.32 | 357.15 | 67.74 | 5.27 | 63.60 | 0.18 |
| | | 25 | 660 | 970.41 | 979.95 | 9.54 | 980.06 | 974.44 | 4.03 | 975.74 | 0.00038 | 1.43 | 460.48 | 75.95 | 6.06 | 70.96 | 0.18 |
| | | 50 | 850 | 970.41 | 981.23 | 10.82 | 981.35 | 974.95 | 4.54 | 976.46 | 0.00037 | 1.54 | 553.72 | 81.02 | 6.83 | 75.21 | 0.18 |
| | | 100 | 1080 | 970.41 | 982.59 | 12.18 | 982.73 | 975.51 | 5.10 | 977.22 | 0.00036 | 1.64 | 658.55 | 85.65 | 7.69 | 78.88 | 0.18 |
| | | 200 | 1810 | 970.41 | 986.19 | 15.78 | 986.36 | 976.98 | 6.57 | 979.28 | 0.00035 | 1.86 | 971.99 | 103.62 | 9.38 | 95.11 | 0.19 |

Table A2.1: Results Colorado River Hydraulic Axis, VL-2 Bridge, Current Situation (Continued)

| Perfil | X (m) | Tr (años) | Caudal ($m^3/s$) | Z Fondo (m.s.n.m) | Z H (m.s.n.m) | H (m) | Z Energía (m.s.n.m) | Z H Crítica (m.s.n.m) | H Crítica (m) | Z E Crítica (m.s.n.m) | J (m/m) | Velocidad (m/s) | Area Esc. ($m^2$) | Per. Mojado (m) | Radio Hidr. (m) | Ancho Sup. (m) | Nº Froude |
|---|---|---|---|---|---|---|---|---|---|---|---|---|---|---|---|---|---|
| 17 | 100 | 2 | 220 | 970.82 | 975.69 | 4.87 | 975.77 | 972.81 | 1.99 | 973.66 | 0.00069 | 1.29 | 169.97 | 51.66 | 3.29 | 49.14 | 0.22 |
| | | 5 | 350 | 970.82 | 977.22 | 6.40 | 977.32 | 973.47 | 2.65 | 974.54 | 0.00063 | 1.37 | 255.39 | 66.25 | 3.85 | 62.81 | 0.22 |
| | | 10 | 470 | 970.82 | 978.43 | 7.61 | 978.52 | 973.98 | 3.16 | 975.22 | 0.00054 | 1.40 | 336.75 | 75.25 | 4.48 | 71.03 | 0.20 |
| | | 25 | 660 | 970.82 | 979.96 | 9.14 | 980.07 | 974.71 | 3.89 | 976.14 | 0.00045 | 1.47 | 449.06 | 81.05 | 5.54 | 75.74 | 0.19 |
| | | 50 | 850 | 970.82 | 981.23 | 10.41 | 981.36 | 975.30 | 4.48 | 976.91 | 0.00041 | 1.55 | 547.68 | 84.96 | 6.45 | 78.64 | 0.19 |
| | | 100 | 1080 | 970.82 | 982.60 | 11.78 | 982.74 | 975.94 | 5.12 | 977.72 | 0.00038 | 1.64 | 657.31 | 89.19 | 7.37 | 81.81 | 0.19 |
| | | 200 | 1810 | 970.82 | 986.19 | 15.37 | 986.37 | 977.63 | 6.81 | 979.73 | 0.00035 | 1.87 | 965.76 | 100.54 | 9.61 | 90.44 | 0.18 |
| 18 | 80 | 2 | 220 | 971.01 | 975.71 | 4.70 | 975.79 | 973.19 | 2.18 | 973.89 | 0.00066 | 1.23 | 179.44 | 56.97 | 3.15 | 54.62 | 0.22 |
| | | 5 | 350 | 971.01 | 977.25 | 6.24 | 977.33 | 973.73 | 2.72 | 974.65 | 0.00058 | 1.26 | 277.64 | 76.68 | 3.62 | 73.09 | 0.21 |
| | | 10 | 470 | 971.01 | 978.45 | 7.44 | 978.54 | 974.15 | 3.14 | 975.26 | 0.00046 | 1.27 | 370.22 | 84.41 | 4.39 | 79.80 | 0.19 |
| | | 25 | 660 | 971.01 | 979.99 | 8.98 | 980.08 | 974.77 | 3.76 | 976.08 | 0.00037 | 1.33 | 495.80 | 89.82 | 5.52 | 83.76 | 0.17 |
| | | 50 | 850 | 971.01 | 981.26 | 10.25 | 981.37 | 975.30 | 4.29 | 976.78 | 0.00033 | 1.41 | 604.26 | 93.22 | 6.48 | 85.81 | 0.17 |
| | | 100 | 1080 | 971.01 | 982.63 | 11.62 | 982.74 | 975.87 | 4.86 | 977.55 | 0.00031 | 1.49 | 722.92 | 96.77 | 7.47 | 87.87 | 0.17 |
| | | 200 | 1810 | 971.01 | 986.23 | 15.22 | 986.38 | 977.45 | 6.44 | 979.40 | 0.00028 | 1.72 | 1051.72 | 107.57 | 9.78 | 95.34 | 0.17 |
| 19 | 60 | 2 | 220 | 971.44 | 975.73 | 4.29 | 975.80 | 973.23 | 1.79 | 973.90 | 0.00058 | 1.18 | 185.69 | 56.20 | 3.30 | 54.10 | 0.20 |
| | | 5 | 350 | 971.44 | 977.26 | 5.82 | 977.34 | 973.73 | 2.29 | 974.62 | 0.00046 | 1.29 | 271.15 | 60.96 | 4.45 | 57.69 | 0.19 |
| | | 10 | 470 | 971.44 | 978.46 | 7.02 | 978.55 | 974.14 | 2.70 | 975.19 | 0.00053 | 1.36 | 346.08 | 80.03 | 4.32 | 76.02 | 0.20 |
| | | 25 | 660 | 971.44 | 979.99 | 8.55 | 980.09 | 974.70 | 3.26 | 975.98 | 0.00044 | 1.38 | 477.02 | 94.97 | 5.02 | 90.06 | 0.19 |
| | | 50 | 850 | 971.44 | 981.27 | 9.83 | 981.37 | 975.20 | 3.76 | 976.68 | 0.00036 | 1.43 | 595.12 | 100.20 | 5.94 | 94.43 | 0.18 |
| | | 100 | 1080 | 971.44 | 982.64 | 11.20 | 982.75 | 975.73 | 4.29 | 977.45 | 0.00031 | 1.48 | 727.50 | 105.72 | 6.88 | 99.16 | 0.17 |
| | | 200 | 1810 | 971.44 | 986.24 | 14.80 | 986.38 | 977.21 | 5.77 | 979.53 | 0.00024 | 1.63 | 1107.10 | 120.71 | 9.17 | 112.04 | 0.17 |
| 20 | 40 | 2 | 220 | 971.86 | 975.73 | 3.87 | 975.82 | 973.48 | 1.62 | 974.18 | 0.00085 | 1.34 | 163.71 | 54.67 | 2.99 | 52.78 | 0.24 |
| | | 5 | 350 | 971.86 | 977.26 | 5.40 | 977.36 | 974.01 | 2.15 | 974.94 | 0.00062 | 1.40 | 250.89 | 62.89 | 3.99 | 60.21 | 0.22 |
| | | 10 | 470 | 971.86 | 978.46 | 6.60 | 978.56 | 974.43 | 2.57 | 975.54 | 0.00052 | 1.45 | 325.08 | 67.03 | 4.85 | 63.57 | 0.20 |
| | | 25 | 660 | 971.86 | 979.98 | 8.12 | 980.10 | 975.03 | 3.17 | 976.37 | 0.00045 | 1.55 | 424.98 | 72.06 | 5.90 | 67.55 | 0.20 |
| | | 50 | 850 | 971.86 | 981.25 | 9.39 | 981.39 | 975.59 | 3.73 | 977.09 | 0.00041 | 1.65 | 514.07 | 79.08 | 6.50 | 73.91 | 0.20 |
| | | 100 | 1080 | 971.86 | 982.61 | 10.75 | 982.77 | 976.18 | 4.32 | 977.86 | 0.00038 | 1.73 | 624.54 | 94.13 | 6.64 | 88.46 | 0.21 |
| | | 200 | 1810 | 971.86 | 986.21 | 14.35 | 986.41 | 977.64 | 5.78 | 979.86 | 0.00031 | 1.81 | 1000.41 | 121.82 | 8.21 | 114.94 | 0.20 |
| 21 | 20 | 2 | 220 | 972.68 | 975.61 | 2.93 | 975.92 | 974.80 | 2.12 | 975.57 | 0.00534 | 2.47 | 89.10 | 47.54 | 1.87 | 46.02 | 0.57 |
| | | 5 | 350 | 972.68 | 977.21 | 4.53 | 977.41 | 975.45 | 2.77 | 976.38 | 0.00202 | 1.99 | 175.57 | 62.31 | 2.82 | 60.31 | 0.37 |
| | | 10 | 470 | 972.68 | 978.42 | 5.74 | 978.60 | 975.93 | 3.25 | 976.96 | 0.00124 | 1.86 | 252.70 | 68.82 | 3.67 | 66.29 | 0.30 |
| | | 25 | 660 | 972.68 | 979.96 | 7.28 | 980.13 | 976.50 | 3.82 | 977.73 | 0.00085 | 1.84 | 358.81 | 75.04 | 4.78 | 71.60 | 0.26 |
| | | 50 | 850 | 972.68 | 981.23 | 8.55 | 981.41 | 977.01 | 4.33 | 978.38 | 0.00071 | 1.88 | 452.79 | 79.87 | 5.67 | 75.67 | 0.24 |
| | | 100 | 1080 | 972.68 | 982.60 | 9.92 | 982.79 | 977.52 | 4.84 | 979.09 | 0.00062 | 1.93 | 559.93 | 86.22 | 6.49 | 81.39 | 0.23 |
| | | 200 | 1810 | 972.68 | 986.21 | 13.53 | 986.42 | 978.89 | 6.21 | 980.96 | 0.00051 | 2.04 | 888.20 | 107.87 | 8.23 | 101.62 | 0.22 |
| 22 | 0 | 2 | 220 | 973.00 | 975.51 | 2.51 | 977.05 | 975.95 | 2.95 | 976.87 | 0.03444 | 5.50 | 39.99 | 25.96 | 1.54 | 25.15 | 1.39 |
| | | 5 | 350 | 973.00 | 976.10 | 3.10 | 978.10 | 976.71 | 3.71 | 977.83 | 0.03444 | 6.27 | 55.79 | 29.74 | 1.88 | 28.71 | 1.44 |
| | | 10 | 470 | 973.00 | 978.25 | 5.25 | 978.74 | 977.45 | 4.45 | 978.47 | 0.00624 | 3.13 | 150.33 | 63.25 | 2.38 | 61.59 | 0.64 |
| | | 25 | 660 | 973.00 | 979.88 | 6.88 | 980.20 | 978.05 | 5.05 | 979.21 | 0.00247 | 2.53 | 260.71 | 75.17 | 3.47 | 72.66 | 0.43 |
| | | 50 | 850 | 973.00 | 981.18 | 8.18 | 981.46 | 978.52 | 5.52 | 979.83 | 0.00145 | 2.32 | 365.74 | 87.35 | 4.19 | 84.21 | 0.36 |
| | | 100 | 1080 | 973.00 | 982.56 | 9.56 | 982.83 | 979.03 | 6.03 | 980.50 | 0.00099 | 2.22 | 487.07 | 95.28 | 5.11 | 91.64 | 0.31 |
| | | 200 | 1810 | 973.00 | 986.18 | 13.18 | 986.44 | 980.32 | 7.32 | 982.26 | 0.00055 | 2.10 | 860.10 | 120.51 | 7.14 | 115.70 | 0.25 |

# ALTO MAIPO HYDROLECTRIC PROJECT

# BASIC ENGINEERING

AM-CO304 CONTRACT

## LAS LAJAS POWER PLANT
## COLINA, LAS PLACAS, EL MORADO AND LA ENGORDA STREAM HYDRAULIC AXISES

| | | | | | | | |
|---|---|---|---|---|---|---|---|
| B | 22-01-08 | Information | J. Ramírez | A. Ugarte / R. Caro | E. Woolvett | R. Bennewitz / A. Lyngra | P. Alvarado |
| A | 011-12-07 | Internal Coordination | J. Ramírez | A. Ugarte / H. Mery | E. Woolvett | R. Bennewitz / A. Lyngra | |
| ISSUING | DATE | PURPOSE OF ISSUING | PREPARED | REVISED | General Coordinator APROVED | D. Project D. Attached APROVED | Project J. AES GENER APPROVED |

CONSULTANTS

REVISE

B

**N°: 020-HI-INF-020**

# INDEX

| ITEM | CONTENT | PAGE |
|---|---|---|
| 1. | INTRODUCTION | **ERROR! BOOKMARK NOT DEFINED.**2 |
| 2. | OBJECTIVE AND SCOPES | **ERROR! BOOKMARK NOT DEFINED.**3 |
| 3. | CLACULATION BASIS | **ERROR! BOOKMARK NOT DEFINED.**3 |
| 3.1 | Natural flow in hydraulic axis | **Error! Bookmark not defined.**3 |
| 3.1 | Roughness coefficient | **Error! Bookmark not defined.**5 |
| 3.2 | Edge condition | **Error! Bookmark not defined.**5 |
| 3.3 | Flow Geometry | **Error! Bookmark not defined.**5 |
| 4. | RESULTS | **ERROR! BOOKMARK NOT DEFINED.**6 |
| 5. | Conclusions | **Error! Bookmark not defined.**16 |
| | ANNEX A: Modelling results | |

Presidente Errázuriz 3943  Telephone (562) 207 2622  FAX (562) 263 5152  Santiago CHILE

## 1 INTRODUCTION

The waters from Colina, El Morado, La Engorda, and Las Placas ravines will be collected through superficial intakes of lateral and/or high mountain types. In this study, the natural regime in such flows will be analyzed for the current condition considering a flow for a return period of 100 years.

A description of each flow to be modified is next:

La Engorda Ravine: The plant in the area where the intake works of such stream will be located is shown in the plane 020-HI-PLA-001-B. A longitudinal profile of 100 m upstream and 100 m downstream such works and the transversal profiles every 20 m, are presented in the same plane.

Colina Stream: The plant in the area where the intake works of such stream will be located is shown in the plane 020-HI-PLA-002-B. A longitudinal profile of 100 m upstream and 100 m downstream such works and the transversal profiles every 20 m are presented in the same plane.

Las Placas Stream: The plant in the area where the intake works of such stream will be located is shown in the plane 020-HI-PLA-003-B. A longitudinal profile of 100 m upstream and 100 m downstream such works and the transversal profiles every 20 m are presented in the same plane.

El Morado Stream: The plant in the area where the intake works of such stream will be located is shown in the plane 020-HI-PLA-004-B. A longitudinal profile of 100 m upstream and 100 m downstream such works and the transversal profiles every 20 m are presented in the same plane.

The flows for the return period of 100 years were taken from the 020-DC-INF-001 report, which are summarized in **Table 1** for each one of the studied flows.

**Table 1**

**Flows for 100 years return period**

| **Stream Colina** | **Canyon El Morado** | **Canyon La Engorda** | **Ravine Las Placas** |
|---|---|---|---|
| **$m^3/s$** | **$m^3/s$** | **$m^3/s$** | **$m^3/s$** |
| 45 | 35 | 20 | 8.5 |

## 2 OBJECTIVE AND SCOPES

The objective of this report is to present the results obtained in the hydraulic axis calculation in the flows of Colina Stream, El Morado Canyon, La Engorda Canyon, and Las Placas Ravine which will be affected by the intake works.

## 3 CALCULATION BASIS

### 3.1 Hydraulic axis en natural flow

The calculation of the hydraulic axis in a river (non-prismatic channel) corresponds to determination of the elevation of the free surface along the flow, from its geometric characteristics, roughness of the river bed and its banks, and its flows.

In order to calculate the hydraulic axis in the flows, the program HEC-RAS 3.1.3 (2005) of the U.S. Army Corps of Engineer's has been used, which solves the equation of power balance (Eq. 3.1.1) through the standard pass method.

$$h_2 + Z_2 + \frac{\alpha_2 V_2^2}{2g} = h_1 + Z_1 + \frac{\alpha_1 V_1^2}{2g} + h_e \qquad \text{(Eq.3.1.1)}$$

Where:

| | | |
|---|---|---|
| $h_i$ | : | Height in section i |
| $Z_i$ | : | Elevation from bottom in section i |
| $\alpha_i$ | : | Coriolis Coefficient in section i |
| $V_i$ | : | Speed in section i |
| he | : | Load loss |

In this case the water level in section “i” is $Z_{hi}$:

$$Z_{hi} = h_i + Z_i \qquad \text{(Eq.3.1.2)}$$

The load loss ($h_e$) between two sections corresponds to a frictional loss plus the loss by contraction or expansion (singular losses). The equation for load losses is the following:

$$h_e = \langle J \rangle \cdot L + C \cdot \left| \frac{\alpha_2 V_2^2}{2g} - \frac{\alpha_1 V_1^2}{2g} \right| \qquad \text{(Eq.3.1.3)}$$

Where:

| | | |
|---|---|---|
| <J> | : | Slope of the load loss between two transversal sections |
| L | : | Distance between transversal sections |
| $\alpha_i$ | : | Coriolis Coefficient in section i |
| $V_i$ | : | Speed in section i |
| C | : | Load loss coefficient by contraction or expansion |

The contraction and expansion depend on the transition nature. In general, along a natural flow, the transitions or geometric changes are gradual, whereby high load losses are not made. According to the literature, it is recommended for gradual transitions, an expansion coefficient of 0.3 and contraction of 0.1.

For calculation of frictional losses, the program considers the method called "Average Conveyance Equation" (Average Hydraulic Conductivity Coefficient). Its expression is the following:

$$< J > = \left( \frac{2Q}{K_1 + K_2} \right)^2 \qquad \text{(Eq.3.1.3)}$$

$$K = \frac{A \cdot R^{2/3}}{n} \qquad \text{(Eq.3.1.4)}$$

Where:

| | | |
|---|---|---|
| $K_i$ | : | Hydraulic conductivity coefficient of section i |
| R | : | Hydraulic radius |
| n | : | Manning's roughness coefficient |

The load loss slope in each section, is calculated according to the Manning's equation.

$$Q = \frac{\sqrt{J}}{n} \cdot R^{2/3} \cdot A = \sqrt{J} \cdot K \qquad \text{(Eq.3.1.4)}$$

## 3.2 Roughness coefficients

The studied flows present a granular river bed, of coarse and extended granulometry, with a well-defined main flow, low presence of bends and little vegetation in its banks. Therefore it has been assigned with a Manning's coefficient of 0.45.

## 3.3 Edge conditions

For calculation of the hydraulic axis is necessary, as well as the geometric and flow data, to establish edge conditions according to the existing hydraulic controls in the analyzed flow.

In the case of a run-off of a river, the edge condition is given from downstream, contrary to this, a torrent is considered from upstream.

In this analysis a mixed run-off has been supposed, that is to say, it requires two edge conditions, one upstream and another downstream. The condition entered to HEC_RAS, in both cases, was of normal height to which the software requires the slopes for its calculation.

## 3.4 Flow Geometry

From the topographic survey, scale 1:1.000, done by Geoexploraciones (2006) for the project, a longitudinal profile of 100 m upstream and 100 m downstream has been obtained out of the works to be carried out for the flows of Colina, El Morado, Las Engorda and Las Placas streams; besides, transversal profiles of 20 m were obtained for each of them.

Geometric data of each flow are presented next:

Stream Colina In The

Figure 1 the plant of the waterway is presented, which shows the location of the longitudinal profile of the transversal profiles taken. In Figure 2 the longitudinal profile of such waterway is presented and in Figure 3 the transversal profiles of the flow are shown.

El Morado Stream: In Figure 4, the waterway plant is presented where the location of the longitudinal profile and the transversal profiles taken are shown, in Figure 5 the longitudinal profile of such flow is presented, and in Figure 6 the transversal profiles of the flow are shown as well.

La Engorda Stream: In Figure 7 the plant of the waterway is presented, which shows the location of the longitudinal profile of the transversal profiles taken. In Figure 8 the longitudinal profile of such waterway is presented and in Figure 9 the transversal profiles of the flow are shown.

Las Placas Stream: In Figure 10 the plant of the waterway is presented which shows the location of the longitudinal profile of the transversal profiles taken. In Figure 11 the longitudinal profile of such waterway is presented and in Figure 12 the transversal profiles of the flow are shown.

## 4 RESULTS

Colina Stream: In Figure 2 the longitudinal profile of the waterway with the run-off heights for 100 years return period and the data previously determined are presented; in Figure 3 the transversal profiles of the waterway with its run-off heights are shown. Finally in Table A.1 of annex A, a summary of the modeling for each section of this waterway is presented.

El Morado Stream: In Figure 5 the longitudinal profile of the waterway with the run-off heights for 100 years return period and the data previously determined are presented; in Figure 6 the transversal profiles of the waterway with its run-off heights are shown. Finally in Table A.2 of annex A, a summary of the modeling for each section of this waterway is presented.

La Engorda Stream: In Figure 8 the longitudinal profile of the waterway with the run-off heights for 100 years return period and the data previously determined are presented; in Figure 9 the transversal profiles of the waterway with its run-off heights are shown. Finally in Table A.3 of annex A, a summary of the modeling for each section of this waterway is presented.

Las Placas Stream: In Figure 11 the longitudinal profile of the waterway with the run-off heights for 100 years return period and the data previously determined are presented; in Figure 12 the transversal profiles of the waterway with its run-off heights are shown. Finally in Table A.4 of annex A, a summary of the modeling for each section of this waterway is presented.

Figure 1
Colina Stream Plant

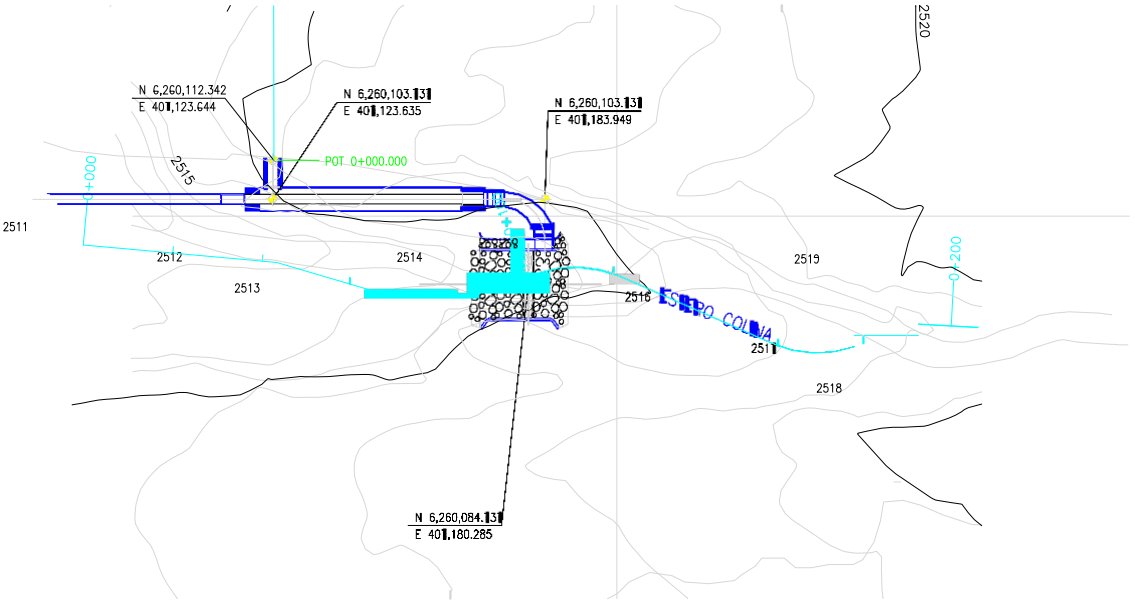


Figure 2
Colina Stream Longitudinal Profile

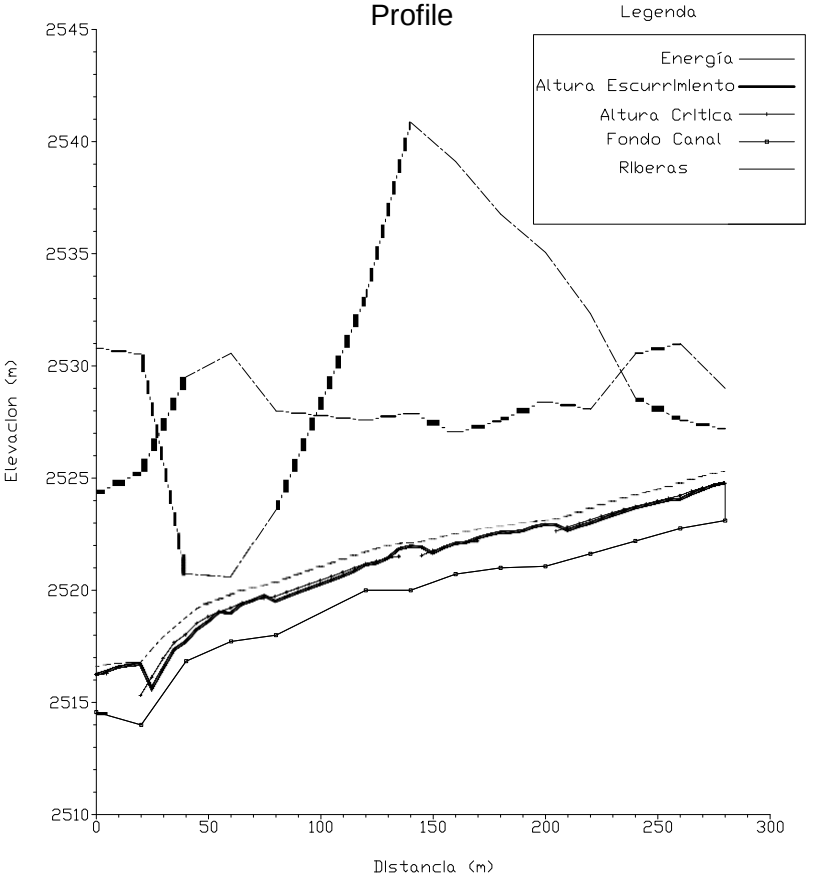

Figure 3

Colina Stream Transversal Profiles

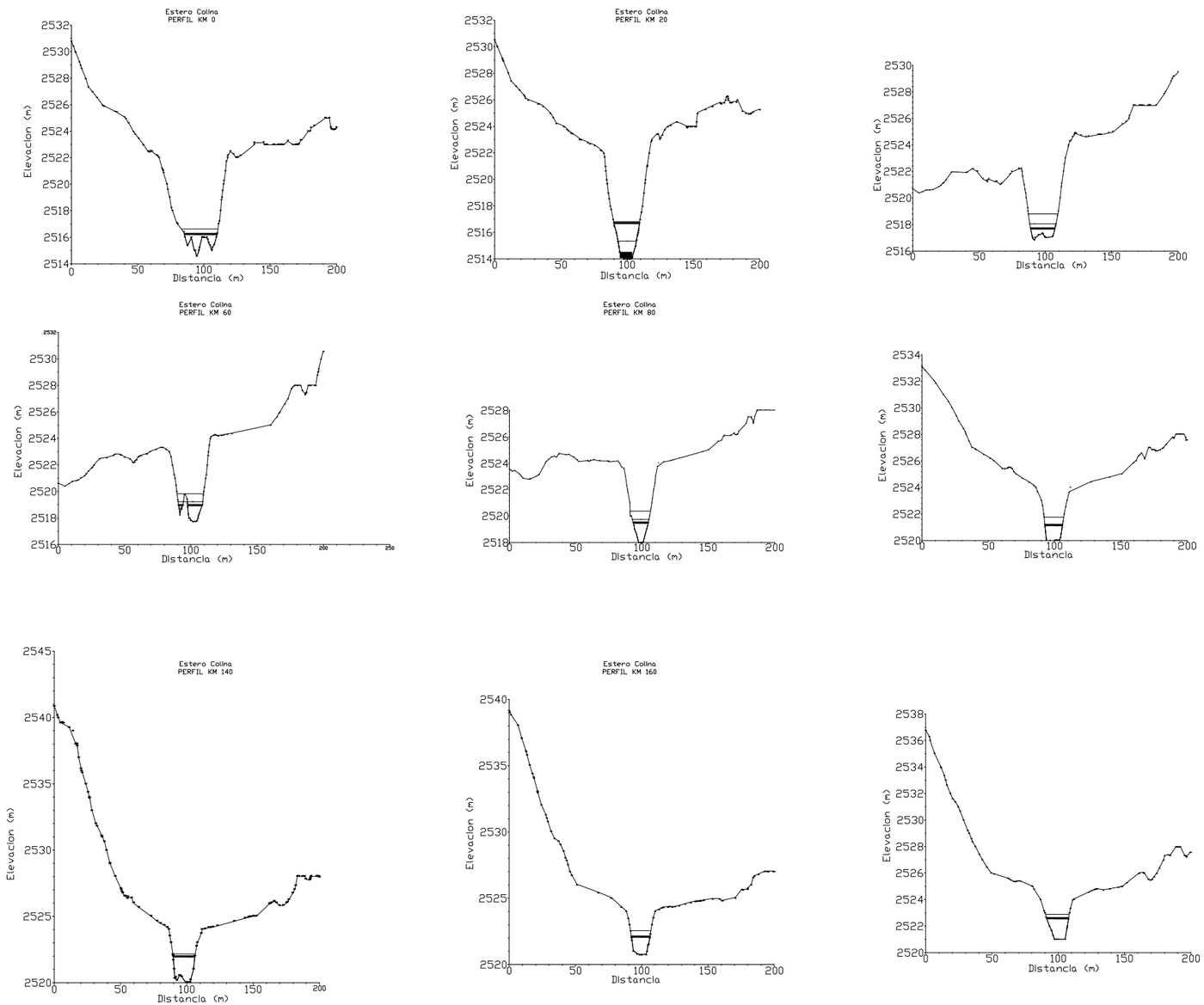

Figure 4
El Morado Stream Plant

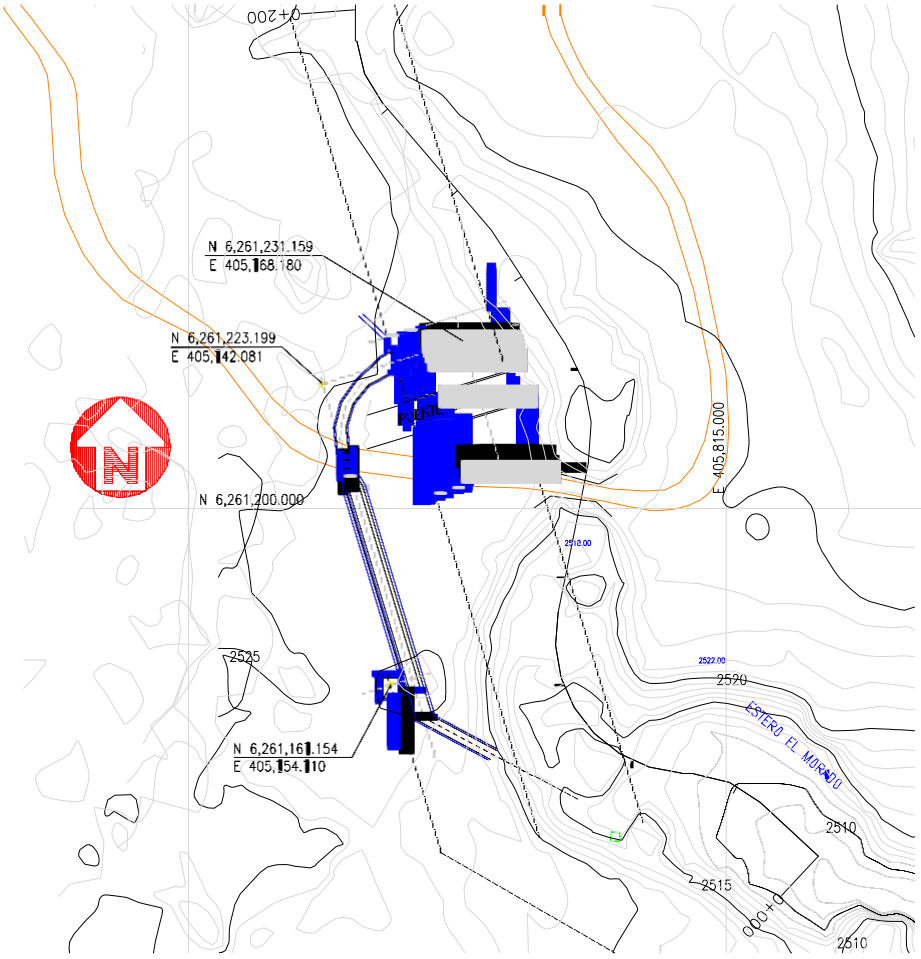


Figure 5
El Morado Stream Longitudinal Profile

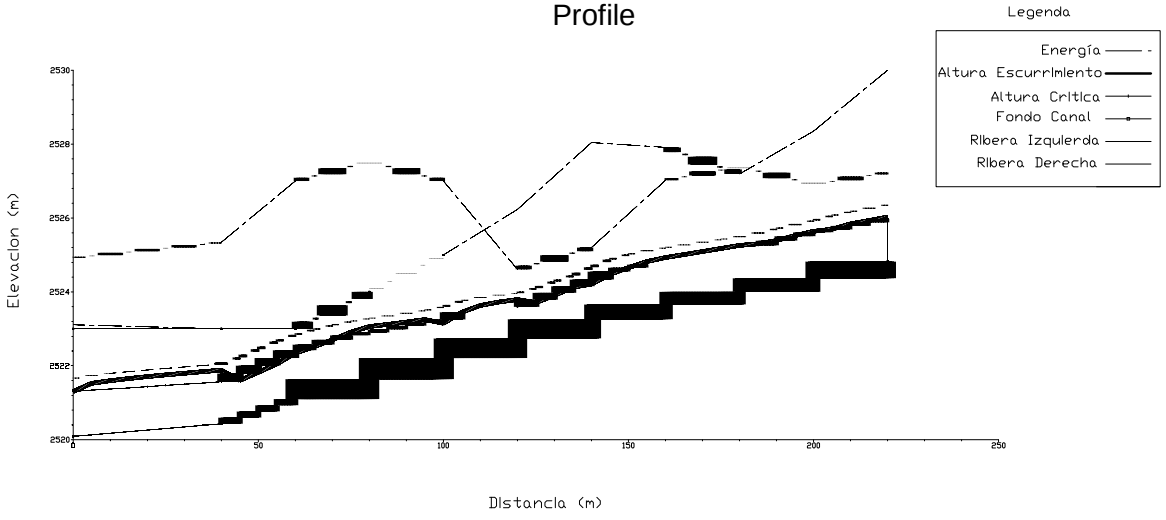

Figure 6

El Morado Transversal Profiles

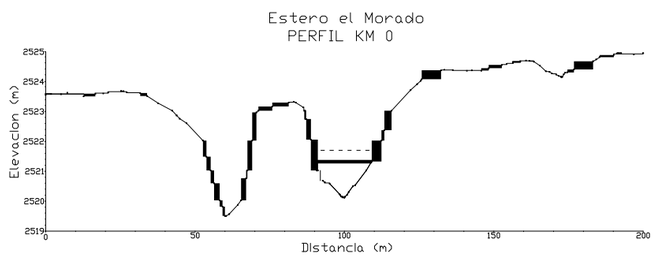


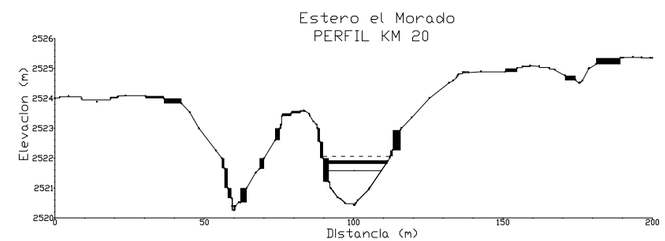


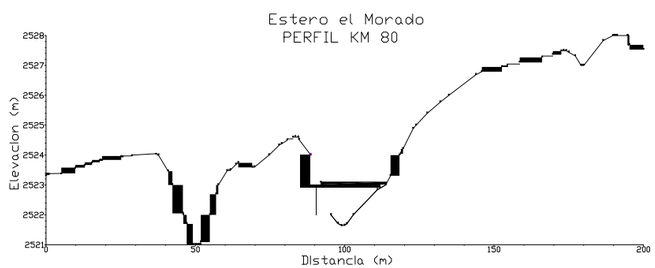


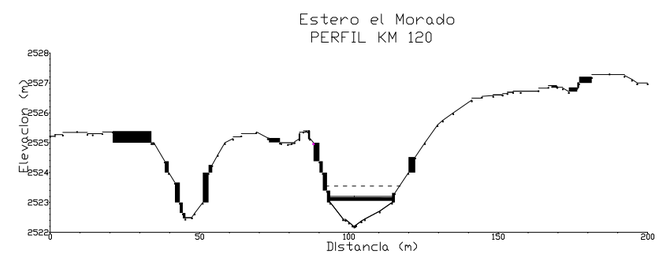


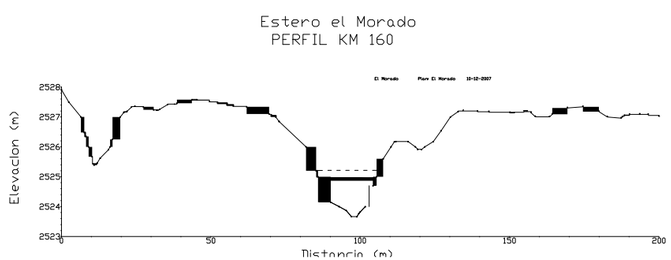


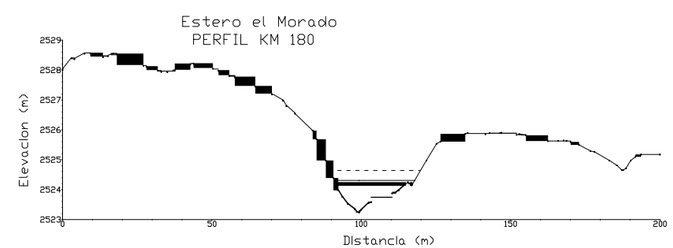

Figure 7
La Engorda Stream Plant

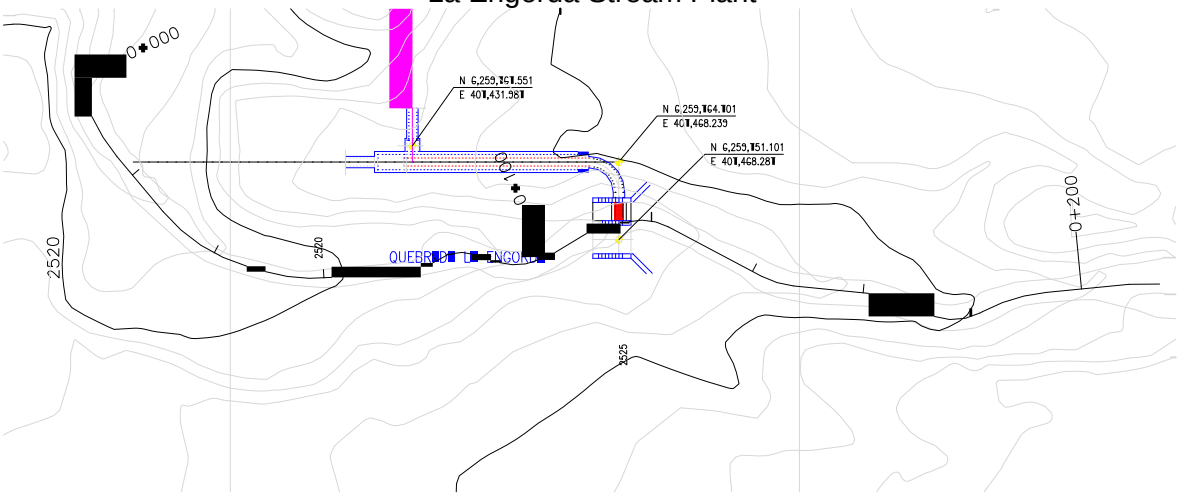


Figure 8
La Engorda Stream Longitudinal Profile

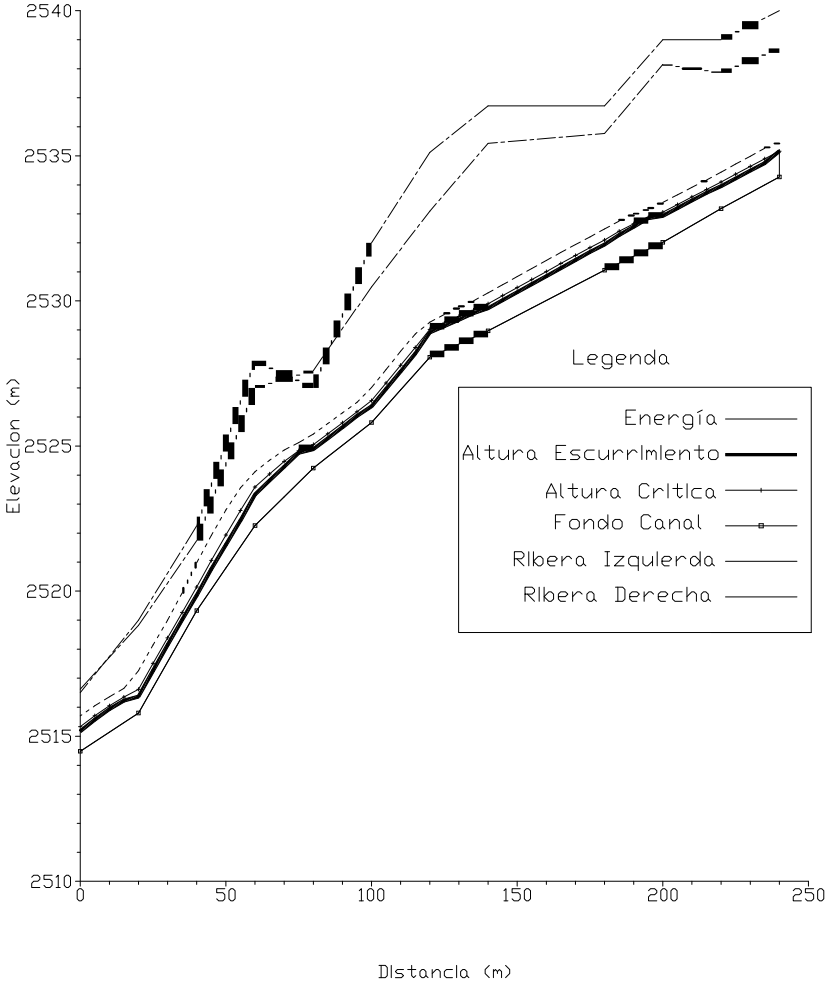

Figure 9
La Engorda Transversal Profiles

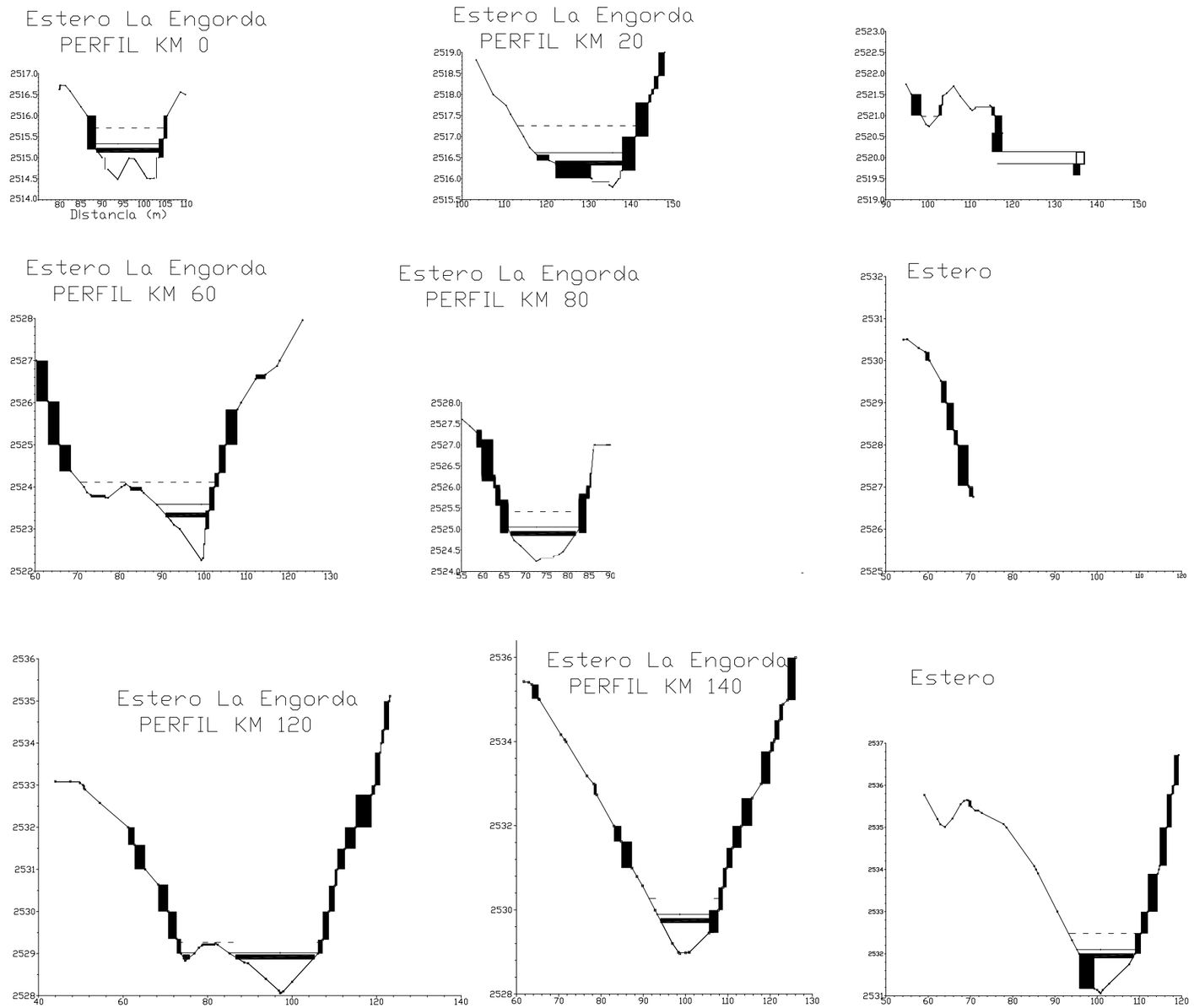

Figure 10
Las Placas Stream Plant

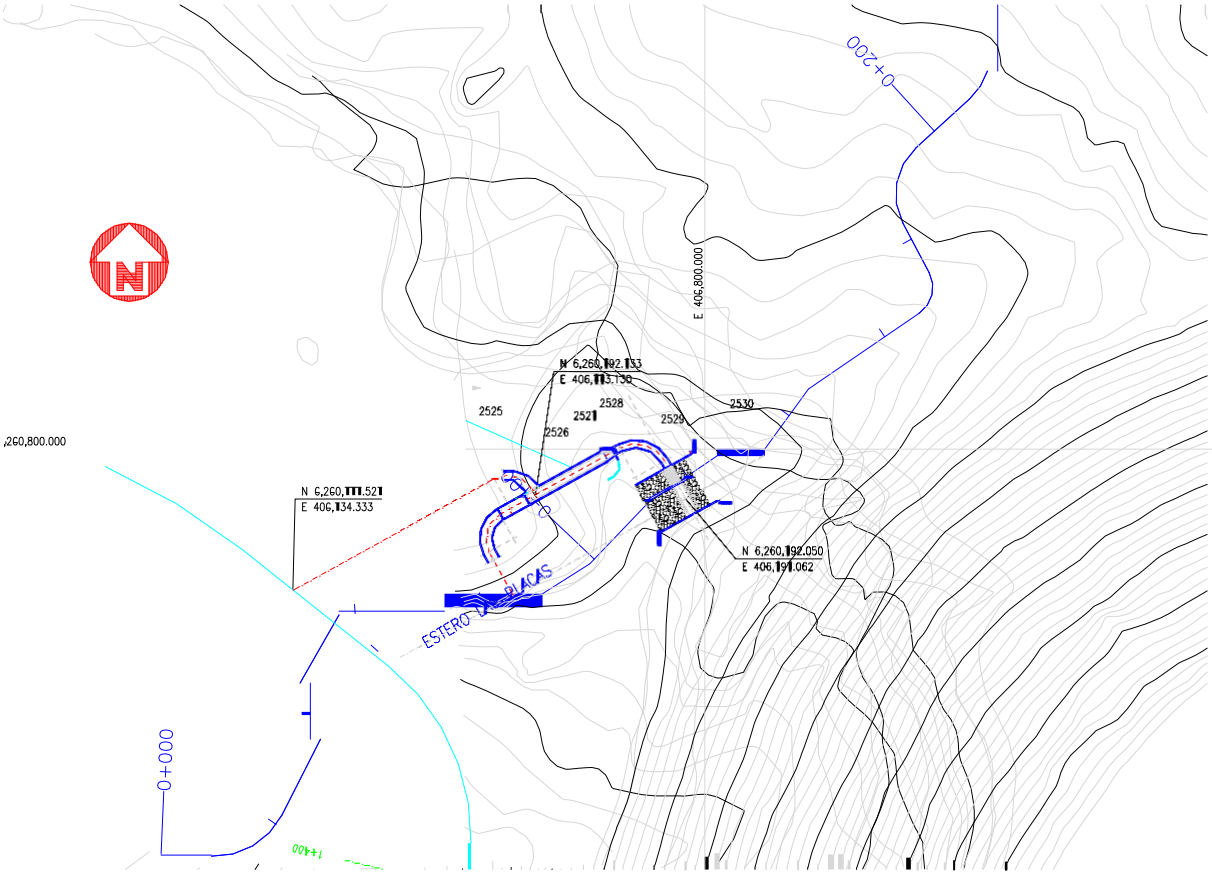


Figure 11
Las Placas Stream Longitudinal
Profile

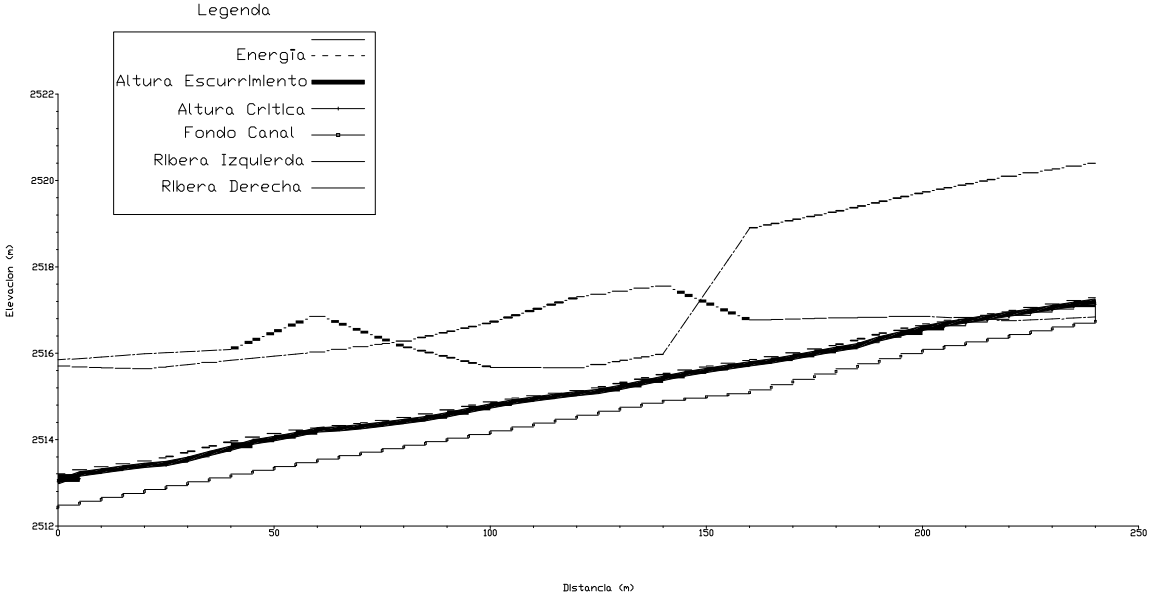

Figure 12

Las Placas Transversal Profiles

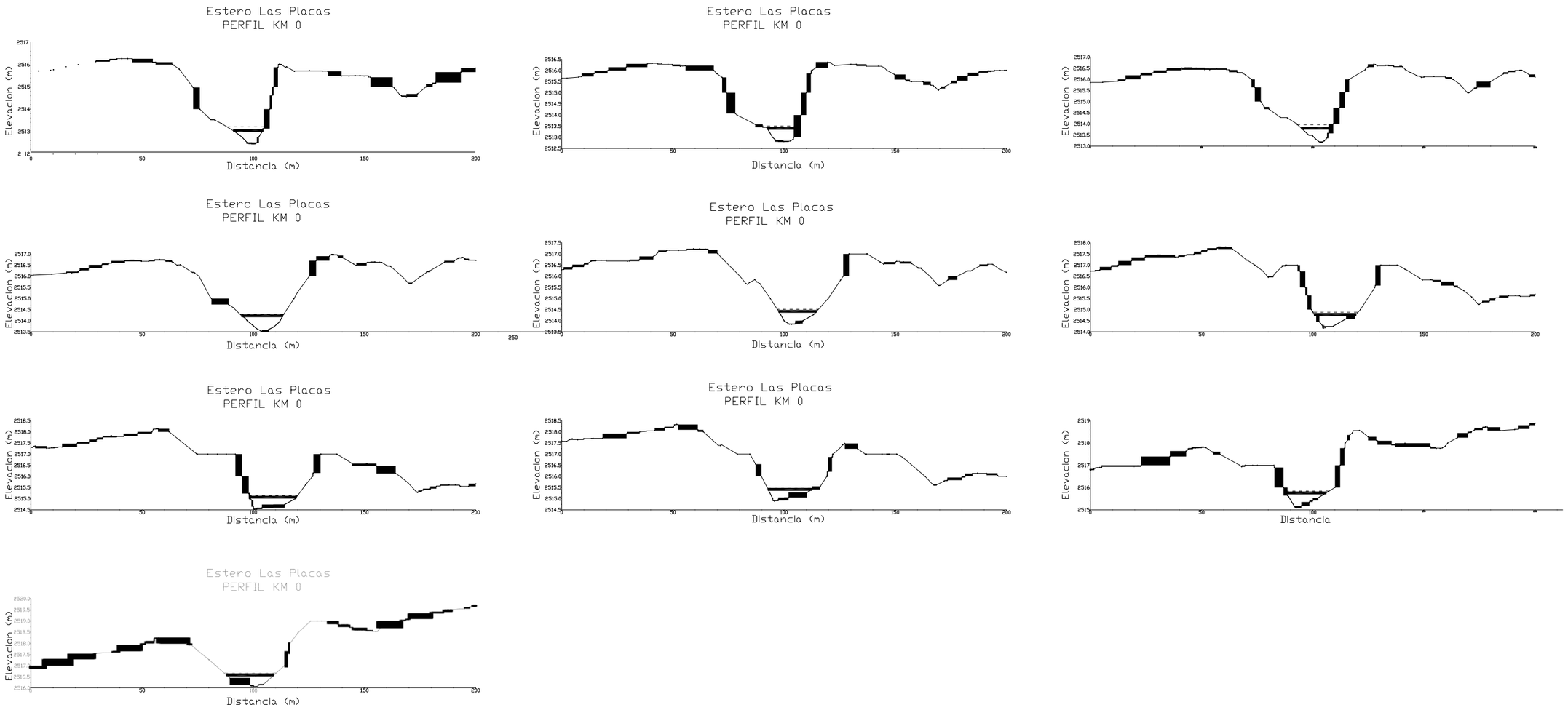

## 5 CONCLUSIONS

Out of the previous modeling, it can be concluded that for a flood of a return period of 100 years, none of the waterways in study are in danger of bursting its banks, what's more, the flow which is closer to burst its banks corresponds to La Engorda Stream, which still has 1 m of freeboard.

Since, a very high freeboard was obtained in the modeling and it has been opted to use a relatively low Manning's coefficient in order to get maximum speed in the flows.

# ANNEX A
# Modelling Results

The detailed calculation of the hydraulic axis for each section of each stream has been included in this annex. In A.1, the results of Colina Stream, in Table A.2 those of El Morado Stream, in Table A.3 those of La Engorda Stream and in Table A.4 those of Las Placas Stream can be seen. The data shown in this table are: The station corresponding to the location in the longitudinal profile; flow (corresponding to the flow with 100 years return period), channel bottom, which corresponds to the elevation of the channel axis, run-off height corresponding to the height of the flow at the channel axis; slope between profiles, is the slope between the profile and the previous profile; speed corresponding to the mean speeds of the flow; and finally the width corresponding to the superficial width of the run-off.

**Table A.1**

**Colina Stream Hydraulic Axis Results**

| Station | Flow | Bottom Chann | Height Run-off | Slopes between Profiles | Speed | Area | Width |
|---|---|---|---|---|---|---|---|
| | (m3/s) | (m) | (m) | (m/m) | (m/s) | (m2) | (m) |
| 260 | 45 | 2523.1 | 1.67 | 0.020 | 3.2 | 14.0 | 13.0 |
| 240 | 45 | 2522.8 | 1.29 | 0,034 | 3.8 | 12.0 | 13.2 |
| 220 | 45 | 2522.2 | 1.47 | 0,025 | 3.4 | 13.3 | 13.7 |
| 200 | 45 | 2521.6 | 1.35 | 0,034 | 3.6 | 12.5 | 14.6 |
| 180 | 45 | 2521.1 | 1.86 | 0,006 | 1.9 | 24.3 | 20.0 |
| 160 | 45 | 2521.0 | 1.58 | 0,009 | 2.3 | 19.3 | 16.6 |
| 140 | 45 | 2520.7 | 1.36 | 0,016 | 2.9 | 15.5 | 14.1 |
| 120 | 45 | 2520.0 | 1.96 | 0,004 | 1.8 | 25.2 | 16.4 |
| 100 | 45 | 2520.0 | 1.14 | 0,024 | 3.4 | 13.4 | 13.3 |
| 80 | 45 | 2518.0 | 1.51 | 0,037 | 4.1 | 11.1 | 11.4 |
| 60 | 45 | 2517.7 | 1.26 | 0,052 | 4.0 | 11.1 | 14.6 |
| 40 | 45 | 2516.8 | 0.86 | 0,101 | 4.6 | 9.8 | 18.2 |
| 20 | 45 | 2514.0 | 2.71 | 0,001 | 1.2 | 37.2 | 19.5 |
| 0 | 45 | 2514.6 | 1.67 | 0,024 | 2.6 | 17.1 | 24.7 |

**Table A.2**

**El Morado Hydraulic Axis Results**

| Station | Total Q | Bottom Chann | Height Run-off | Slopes between Profiles | Speed | Area | Width |
|---|---|---|---|---|---|---|---|
| | (m3/s) | (m) | (m) | (m/m) | (m/s) | (m2) | (m) |
| 200 | 35 | 2524.8 | 1.21 | 0,019 | 2.6 | 13.7 | 17.3 |
| 180 | 35 | 2524.4 | 1.27 | 0,022 | 2.4 | 14.7 | 23.3 |
| 160 | 35 | 2524.0 | 1.26 | 0,014 | 2.1 | 16.4 | 22.0 |
| 140 | 35 | 2523.7 | 1.27 | 0,014 | 2.3 | 15.3 | 19.0 |
| 120 | 35 | 2523.3 | 0.95 | 0,049 | 3.0 | 11.7 | 24.3 |
| 100 | 35 | 2522.7 | 1.05 | 0,010 | 1.8 | 19.0 | 24.7 |
| 80 | 35 | 2522.2 | 0.94 | 0,040 | 3.0 | 11.8 | 21.5 |
| 60 | 35 | 2521.6 | 1.42 | 0,012 | 2.1 | 17.0 | 22.0 |
| 40 | 35 | 2521.1 | 1.24 | 0,028 | 3.1 | 11.2 | 14.3 |
| 20 | 35 | 2520.4 | 1.45 | 0,007 | 1.8 | 19.5 | 21.2 |
| 0 | 35 | 2520.1 | 1.22 | 0,022 | 2.6 | 13.4 | 18.7 |

**Table A.3**

**La Engorda Stream Hydraulic Axis Results**

| Station | Total Q | Bottom Channe | Height Run-off | Slopes between Profiles | Speed | Area | Width |
|---|---|---|---|---|---|---|---|
| | (m3/s) | (m) | (m) | (m/m) | (m/s) | (m2) | (m) |
| 220 | 20 | 2534.3 | 0.89 | 0,025 | 2.4 | 8.3 | 14.2 |
| 200 | 20 | 2533.2 | 0.78 | 0,056 | 3.1 | 6.5 | 14.4 |
| 180 | 20 | 2532.0 | 0.91 | 0,053 | 3.0 | 6.6 | 14.4 |
| 160 | 20 | 2531.1 | 0.88 | 0,057 | 3.3 | 6.2 | 12.7 |
| 140 | 20 | 2529.0 | 0.78 | 0,055 | 3.2 | 6.2 | 12.6 |
| 120 | 20 | 2528.1 | 0.85 | 0,052 | 2.6 | 7.6 | 20.2 |
| 100 | 20 | 2525.8 | 0.56 | 0,123 | 3.6 | 5.6 | 18.1 |
| 80 | 20 | 2524.2 | 0.65 | 0,069 | 3.2 | 6.2 | 15.3 |
| 60 | 20 | 2522.3 | 1.07 | 0,081 | 3.9 | 5.1 | 10.0 |
| 40 | 20 | 2519.3 | 0.53 | 0,188 | 4.7 | 4.3 | 12.5 |
| 20 | 20 | 2515.8 | 0.57 | 0,185 | 4.2 | 4.8 | 16.5 |
| 0 | 20 | 2514.5 | 0.69 | 0,071 | 3.2 | 6.2 | 15.1 |

**Table A.4**

**L**as Placas Stream Hydraulic Axis

| Station | Total Q | Bottom Channe | Height Run-off | Slopes between Profiles | Speed | Area | Width |
|---|---|---|---|---|---|---|---|
| | (m3/s) | (m) | (m) | (m/m) | (m/s) | (m2) | (m) |
| 240 | 8.5 | 2516.7 | 0.47 | 0,015 | 1.3 | 6.5 | 19.8 |
| 220 | 8.5 | 2516.4 | 0.52 | 0,015 | 1.2 | 7.0 | 23.8 |
| 200 | 8.5 | 2516.1 | 0.53 | 0,018 | 1.3 | 6.4 | 21.3 |
| 180 | 8.5 | 2515.6 | 0.51 | 0,017 | 1.4 | 6.1 | 18.6 |
| 160 | 8.5 | 2515.1 | 0.67 | 0,014 | 1.3 | 6.5 | 17.9 |
| 140 | 8.5 | 2514.9 | 0.53 | 0,020 | 1.4 | 6.0 | 19.8 |
| 120 | 8.5 | 2514.5 | 0.55 | 0,011 | 1.2 | 7.4 | 21.0 |
| 100 | 8.5 | 2514.2 | 0.62 | 0,017 | 1.4 | 6.2 | 18.8 |
| 80 | 8.5 | 2513.8 | 0.59 | 0,013 | 1.3 | 6.4 | 17.1 |
| 60 | 8.5 | 2513.5 | 0.71 | 0,007 | 1.1 | 8.0 | 18.5 |
| 40 | 8.5 | 2513.2 | 0.64 | 0,024 | 1.8 | 4.9 | 13.4 |
| 20 | 8.5 | 2512.8 | 0.61 | 0,011 | 1.4 | 6.1 | 13.4 |
| 0 | 8.5 | 2512.4 | 0.59 | 0,029 | 1.9 | 4.6 | 13.1 |

# PROYECTO HIDROELECTRICO ALTO MAIPO

# BASIC ENGINEERING

CONTRACT AM-CO304

## ALFALFAL II POWER PLANT
## EL YESO RIVER HYDRAULIC AXIS
## EL YESO BRIDGE

| | | | | | | | |
|---|---|---|---|---|---|---|---|
| | | | | | | | |
| A | 13-12-07 | Information | R. Saraiva | R. Caro / A. Ugarte | E. Woolvett | R. Bennewitz / A. Lyngra | P.Alvarado |
| ISSUED | DATE | PURPOSE OF ISSUE | PREPARED BY | REVIEWED BY | APPROVED BY General Coordinator | APPROVED BY Project D. Asst D. | APPROVED BY AES GENER Project Lead |

CONSULTANTS

**REVISION**

A

**No. 020-HI-INF-015**

# TABLE OF CONTENTS


| ITEM | CONTENTS | PAGE |
|---|---|---|
| 1. | INTRODUCTION | 1 |
| 2. | PURPOSE AND SCOPES | 2 |
| 3. | CALCULATION BASES | 3 |
| 3.1 | Hydraulic Axis on Natural Channels | 3 |
| 3.2 | Flood Flows | 5 |
| 3.3 | Channel Sections | 5 |
| 3.4 | Roughness Coefficient | 7 |
| 3.5 | Border Conditions | 8 |
| 4. | RESULTS | 9 |
| 4.1 | Hydraulic Axis in a Natural (No Bridge) Situation | 9 |
| 4.2 | Hydraulic Axis in the Future (with Bridge) Situation | 13 |
| 5. | CONCLUSIONS | 14 |

ANNEX 1: Supplementary Estimate of Flood Flows for Arrangement of Bridges and Muck Disposal Sites

ANNEX 2: Hydraulic Axis, No Bridge Situation

# 1. INTRODUCTION

The works of the El Alfalfal II Power Plant envisage catching water from the upper basin of the El Volcán River through four water intakes (El Morado, Las Placas, Colina and La Engorda), and conveying it through a tunnel (El Volcán) up to an intake well located on the south bank of the El Yeso River. This intake well also receives the river flow captured downstream of the El Yeso Reservoir, which added to that captured from the basin of El Volcán River, is conveyed through a series of pressure pipes until it enters a construction window at the beginning of the power plant headrace tunnel. Figure 1.1 shows a diagram of the works of the power plant.

For the construction of the headrace tunnel, an access road to the construction window VA-4 has been planned; the road is to cross the El Yeso River by a 30 m long 5 m wide bridge (see drawing 20-CA-PLA-026).

.

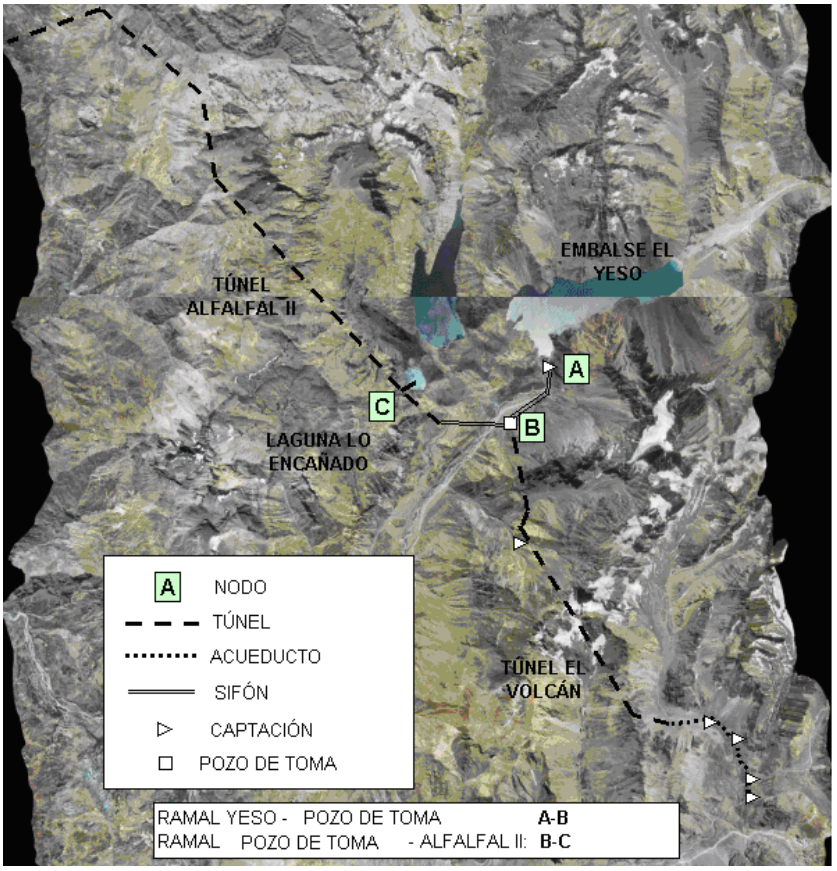


Figure 1.1: General diagram of the works of the El Alfalfal II Power Plant

## 2. PURPOSE AND SCOPES

The purpose of this report is to present the results obtained from the calculation of the El Yeso River hydraulic axis, some 4.5 km downstream of the El Yeso Reservoir, at the location envisaged for the bridge of the same name. The hydraulic levels will help to define the minimum elevation of the bridge platform, as well as the influence of the bridge on the hydraulic axis of the channel under natural conditions.

# 3. CALCULATION BASES

## 3.1 Hydraulic Axis on Natural Channels

The calculation of the hydraulic axis on a river (non-prismatic channel) is the determination of the free surface along the channel based on its characteristics, e.g. geometrical features, riverbed and river bank roughness, and flow rates.

The El Yeso River hydraulic axis has been calculated using the U.S Army Corps of Engineers' software program called HEC-RAS 3.1.3 (2005), which solves the energy balance equation (Ec. 3.1.1) by means of the standard step method.

$$h_2 + Z_2 + \frac{\alpha_2 V_2^2}{2g} = h_1 + Z_1 + \frac{\alpha_1 V_1^2}{2g} + h_e \qquad \text{(Ec.3.1.1)}$$

Where:

| | | |
|---|---|---|
| $h_i$ | : | Height in section i |
| $Z_i$ | : | Bottom level in section i |
| $\alpha_i$ | : | Coriolis coefficient in section i |
| $V_i$ | : | Velocity in section i |
| he | : | Head loss |

In this case, the water level in a section "i" is $Z_{hi}$:

$$Z_{hi} = h_i + Z_i \qquad \text{(Ec.3.1.2)}$$

The head loss ($h_e$) between two sections is the loss by friction plus the loss by contraction or expansion (singular losses). The head loss equation is as follows:

$$h_e = \langle J \rangle \cdot L + C \cdot \left| \frac{\alpha_2 V_2^2}{2g} - \frac{\alpha_1 V_1^2}{2g} \right| \qquad \text{(Ec.3.1.3)}$$

Where:

| | | |
|---|---|---|
| <J> | : | Head loss slope between the two cross sections |

| | | |
|---|---|---|
| L | : | Distance between cross sections |
| $\alpha_i$ | : | Coriolis coefficient in section i |
| $V_i$ | : | Velocity in section i |
| C | : | Contraction or expansion head loss coefficient |

Contraction and expansion coefficients depend on the nature of the transition. In general terms, transitions or geometric changes along a natural channel are gradual; therefore, no high head losses are incurred. According to the literature, an expansion coefficient of 0.3 and a contraction coefficient of 0.1 are recommended for gradual transitions. In the case of contractions caused by structures such as bridges and sewers, the recommended coefficients for expansion and contraction are 0.5 and 0.3, respectively.

For the calculation of frictional losses, the program uses the method called “Average Conveyance Equation”. It is expressed by the following equation:

$$< J > = \left( \frac{2Q}{K_1 + K_2} \right)^2 \qquad \text{(Ec.3.1.4)}$$

$$K = \frac{A \cdot R^{2/3}}{n} \qquad \text{(Ec.3.1.5)}$$

Where:

| | | |
|---|---|---|
| $K_i$ | : | Conveyance coefficient in section i |
| R: | : | Hydraulic radius |
| n | : | Manning’s roughness coefficient |

The head loss slope in each section is calculated using Manning’s equation.

$$Q = \frac{\sqrt{J}}{n} \cdot R^{2/3} \cdot A = \sqrt{J} \cdot K \qquad \text{(Ec.3.1.6)}$$

## 3.2 Flood Flows

The flow rate used for calculating the hydraulic axis is the design flow rate for the El Yeso Reservoir weir, i.e. 80 $m^3/s$.

## 3.3 Channel Sections

Based on the 1:1,000 scale topographical mapping made by Geoexploraciones (2006) for the project, twenty-two (22) cross section profiles along each channel have been obtained for the zone where the bridge will be located. The hydraulic study considered an overall length of approximately 400 m, of which 200 m are upstream and 200 m are downstream of the bridge.

Figure 3.3.1 shows the cross section profiles considered in the calculation of hydraulic axes.

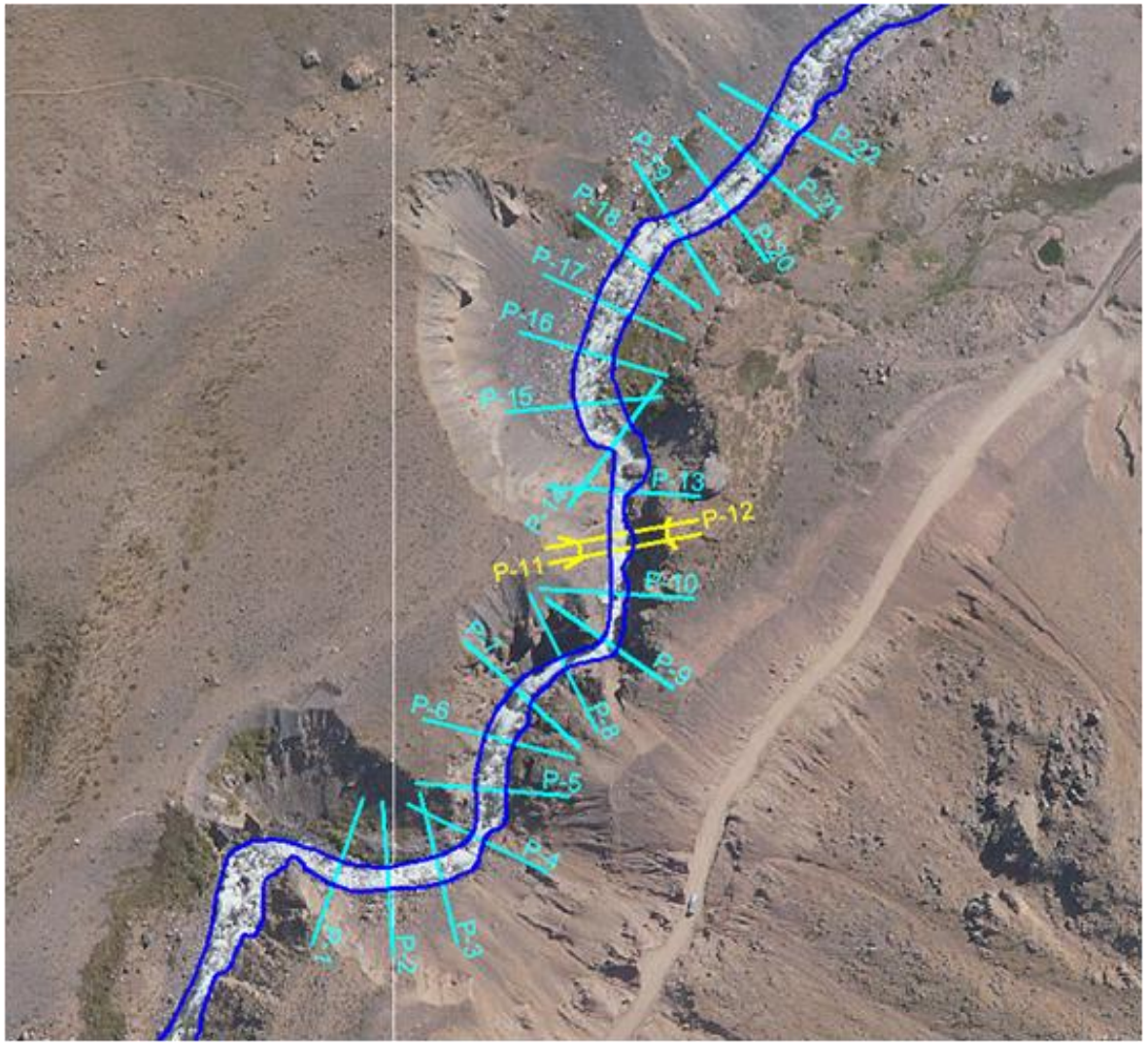


Figure 3.3.1: Location of cross section profiles for the bridge over the El Yeso River (El Yeso Bridge)

## 3.4 Roughness Coefficient

The El Yeso River in the stretch under study exhibits a granular bed with extended gross grain size characteristics, with a well-defined main channel, low presence of curves and scanty vegetation on its banks. Figures 3.4.1 and 3.4.2 are photographs of the river in the zones under study.

Cowan's method for determining the roughness coefficient was used to estimate the roughness of the main channel and of the flood zones on the river banks. The expression to determine Manning's coefficient is as follows:

$$n = (n_0 + n_0 + n_0 + n_0) \cdot m_5 \qquad \text{(Ec.3.4.1)}$$

Where:

| | | |
|---|---|---|
| $n_0$ | : | Base roughness coefficient for a straight, uniform and smooth channel |
| $n_1$ | : | Degree of irregularity in the section |
| $n_2$ | : | Variation in the cross section |
| $n_3$ | : | Effect of obstructions |
| $n_4$ | : | Presence of vegetation |
| $m_5$ | : | Correction factor for meandering |

The results obtained are shown in the following table:

Table 3.4.1: El Yeso River roughness coefficients according to Cowan's method.

| Coefficient | Right Bank | Main Channel | Left Bank |
|---|---|---|---|
| $n_0$ | 0.028 | 0.028 | 0.028 |
| $n_1$ | 0.010 | 0.005 | 0.010 |
| $n_2$ | 0.005 | 0.005 | 0.005 |
| $n_3$ | 0.010 | 0.000 | 0.010 |
| $n_4$ | 0.005 | 0.005 | 0.005 |
| $m_5$ | 1.000 | 1.000 | 1.000 |
| n | 0.058 | 0.043 | 0.058 |

Finally, a value of n=0.045 was used for the main channel and of n=0.055 for the flood plains.

## 3.5 Border Conditions

To calculate the hydraulic axis, in addition to geometrical and flow rate data, border conditions should be established according to the hydraulic controls existing in the channel under analysis.

In the event of a river runoff, the border condition is set from downstream upwards, while a torrent flow is conditioned from upstream downwards.

A mixed runoff has been assumed in this analysis, which means that two border conditions –one upstream and one downstream– are required. The condition inputted in the HEC-RAS in both cases was the normal runoff elevation, the calculation of which requires that slope data be fed into the software.

# 4. RESULTS

## 4.1 Hydraulic Axis in a Natural (No Bridge) Situation

Figure 4.1.1 shows a longitudinal profile with the results obtained from the El Yeso River hydraulic axis in the zone where the bridge will be located, for a flow rate equivalent to Tr=100 years. Detailed results are shown in Annex 2.

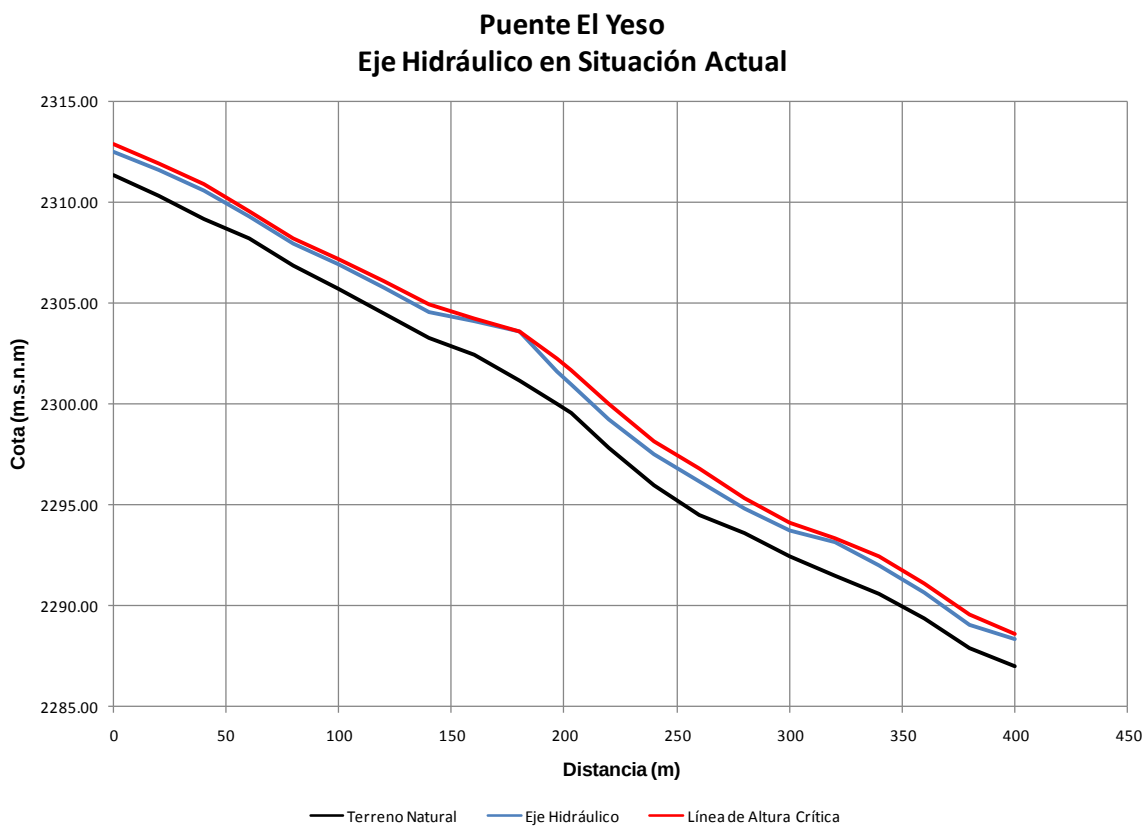


Figure 4.1.1: El Yeso River hydraulic axis. No bridge situation.

The El Yeso River runoff system in the stretch under analysis is equivalent to torrent, close to critical, conditions.

Table 4.1.1 summarizes runoff levels and elevations in the stretch under analysis. It may be seen in Figure 3.3.1 that the bridge is to be located between profiles 11 and 12, where the hydraulic axis reaches a maximum elevation of 2,301.6 masl.

According to the project's design standards, the lower beam of the bridge should be placed one meter above the maximum level of the hydraulic axis, that is, at a minimum elevation of 2,302.6 masl.

Table 4.1.1: Results for Q=80 m³/s

| Profile | X | Z H | H | Critical Z H | Critical H |
|---|---|---|---|---|---|
| | (m) | (masl) | (m) | (masl) | (m) |
| 1 | 400 | 2288.36 | 1.36 | 2288.61 | 1.61 |
| 2 | 380 | 2289.09 | 1.19 | 2289.56 | 1.66 |
| 3 | 360 | 2290.68 | 1.29 | 2291.13 | 1.74 |
| 4 | 340 | 2292.03 | 1.47 | 2292.42 | 1.86 |
| 5 | 320 | 2293.15 | 1.65 | 2293.37 | 1.87 |
| 6 | 300 | 2293.74 | 1.28 | 2294.14 | 1.68 |
| 7 | 280 | 2294.80 | 1.20 | 2295.34 | 1.74 |
| 8 | 260 | 2296.19 | 1.68 | 2296.77 | 2.26 |
| 9 | 240 | 2297.52 | 1.52 | 2298.16 | 2.16 |
| 10 | 220 | 2299.24 | 1.39 | 2299.97 | 2.12 |
| **11** | **203** | **2300.97** | **1.43** | **2301.64** | **2.10** |
| **12** | **197** | **2301.61** | **1.61** | **2302.24** | **2.24** |
| 13 | 180 | 2303.57 | 2.42 | 2303.58 | 2.43 |
| 14 | 160 | 2304.12 | 1.68 | 2304.22 | 1.78 |
| 15 | 140 | 2304.54 | 1.24 | 2304.91 | 1.61 |
| 16 | 120 | 2305.76 | 1.26 | 2306.10 | 1.60 |
| 17 | 100 | 2306.89 | 1.19 | 2307.19 | 1.49 |
| 18 | 80 | 2307.94 | 1.04 | 2308.21 | 1.31 |
| 19 | 60 | 2309.25 | 1.05 | 2309.56 | 1.36 |
| 20 | 40 | 2310.53 | 1.33 | 2310.89 | 1.69 |
| 21 | 20 | 2311.60 | 1.25 | 2311.93 | 1.58 |
| 22 | 0 | 2312.47 | 1.10 | 2312.86 | 1.49 |

Figures 4.1.2 and 4.1.3 show the results for profiles 11 and 12 corresponding to sections located immediately upstream and downstream of the bridge platform. Finally, figures 4.1.4 and 4.1.5 show the hydraulic axis in the sections located 20 m upstream and 20 m downstream of the bridge (profiles 10 and 13, respectively).

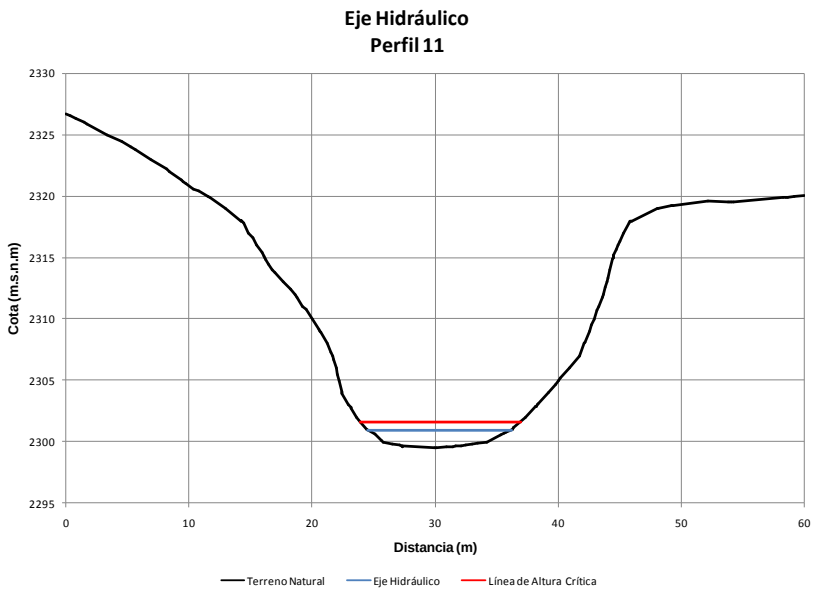


Figure 4.1.2: Results for profile 11

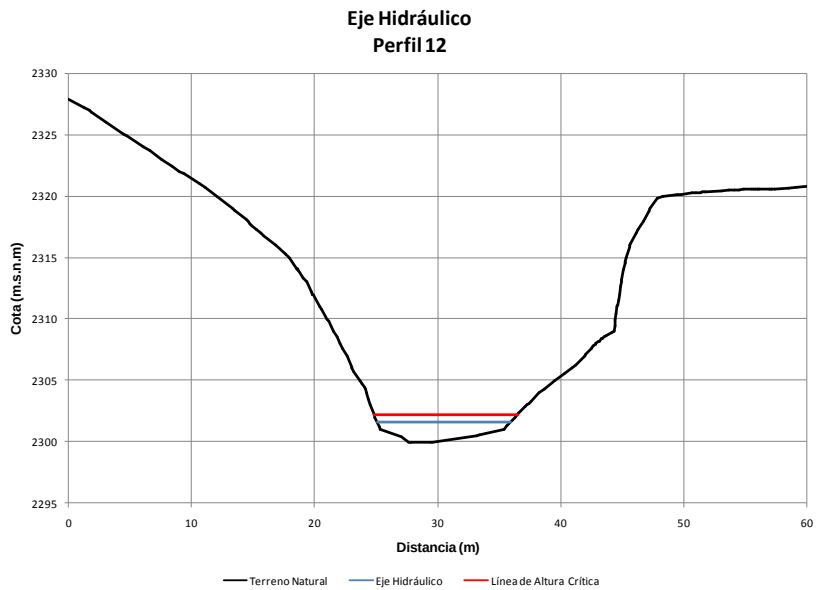


Figure 4.1.3: Results for profile 12

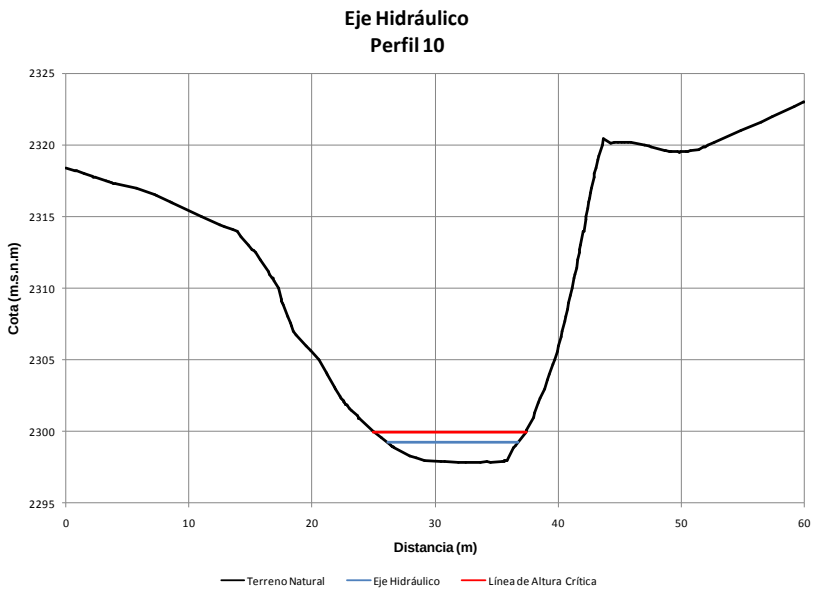


Figure 4.1.4: Results for profile 10

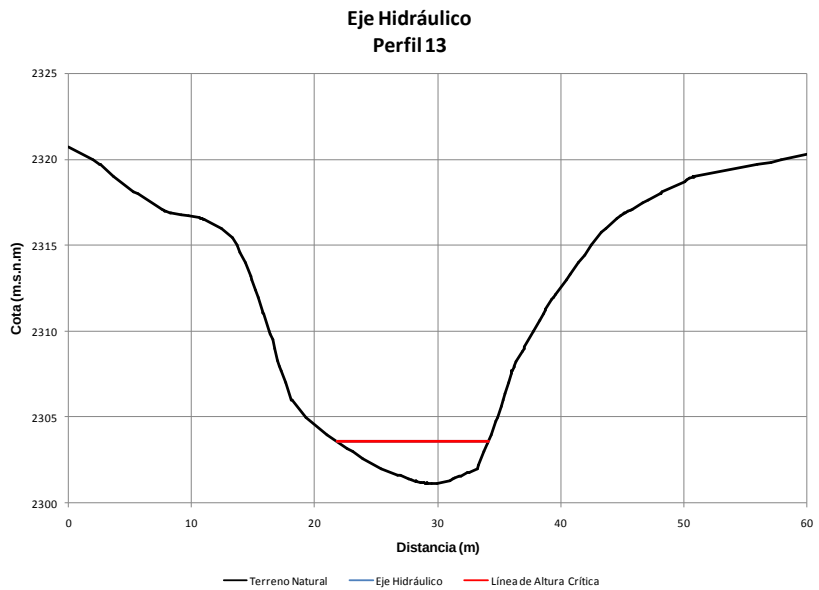


Figure 4.1.5: Results for profile 13

## 4.2 Hydraulic Axis in the Future (with Bridge) Situation

According to drawing 020-CA-PLA-26 the bridge over the El Yeso River is 30 m long and 5 m wide. The minimum elevation of the bridge platform is 2,319.6 masl, while the elevation of the lower beam is 2,317.2 masl. According to the calculations presented in the previous section, the bridge freeboard would be some 15.6 m (with respect to the lower beam). Figure 4.2.1 shows cross profile 11, including the access embankments and the bridge platform.

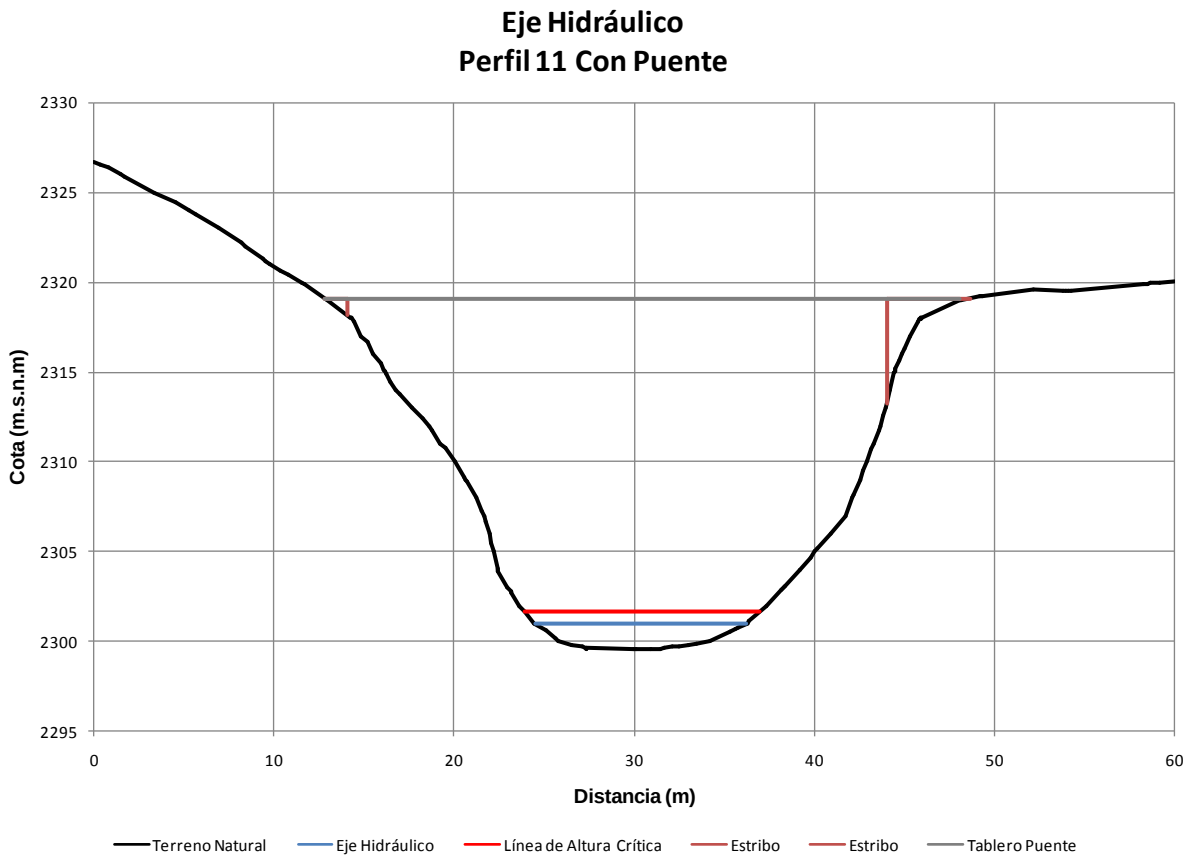


Figure 4.2.1: El Yeso River Hydraulic Axis (Profile 11)

As may be seen in the above figure, the bridge abutments will remain outside the channel, and may be built over foundation piles without obstructing the channel. Thus, the result of the hydraulic axis in the 'with bridge' situation is equal to that presented in section 4.1 of this report.

## 5. CONCLUSIONS

The results obtained from the calculation of the hydraulic axis on the El Yeso River, where the bridge of the same name is to be located, on the access road to window VA-4, make it possible to determine that the bridge does not alter the river's hydraulic axis in the event of maximum flow discharge from the reservoir.

Finally, according to the preliminary design of the bridge, the lower beam is to be placed some 15.6 m above the maximum level of the hydraulic axis. This value is above the recommended minimum, which is 1 m; therefore, the bridge would not be affected by such a contingency.

# ANNEX 1

## El Yeso River Hydraulic Axis.
## El Yeso Bridge
## (No Bridge Situation)

Table A2.1: Results of El Yeso River Hydraulic Axis, El Yeso Bridge. Current Situation.

| Perfil | X (m) | Caudal ($m^3/s$) | Z Fondo (m.s.n.m) | Z H (m.s.n.m) | H (m) | Z Energía (m.s.n.m) | Z H Crítica (m.s.n.m) | H Crítica (m) | Z E. Crítica (m.s.n.m) | J (m/m) | Velocidad (m/s) | Area Esc. ($m^2$) | Per. Mojado (m) |
|---|---|---|---|---|---|---|---|---|---|---|---|---|---|
| 1 | 400 | 80 | 2287.00 | 2288.36 | 1.36 | 2289.27 | 2288.61 | 1.61 | 2289.18 | 0.04015 | 4.25 | 18.84 | 20.24 |
| 2 | 380 | 80 | 2287.90 | 2289.09 | 1.19 | 2290.58 | 2289.56 | 1.66 | 2290.10 | 0.08522 | 5.41 | 14.80 | 19.45 |
| 3 | 360 | 80 | 2289.39 | 2290.68 | 1.29 | 2292.10 | 2291.13 | 1.74 | 2291.73 | 0.06836 | 5.29 | 15.12 | 17.39 |
| 4 | 340 | 80 | 2290.56 | 2292.03 | 1.47 | 2293.31 | 2292.42 | 1.86 | 2293.07 | 0.05285 | 5.02 | 15.93 | 16.34 |
| 5 | 320 | 80 | 2291.50 | 2293.15 | 1.65 | 2294.15 | 2293.37 | 1.87 | 2294.09 | 0.03169 | 4.43 | 18.06 | 15.25 |
| 6 | 300 | 80 | 2292.46 | 2293.74 | 1.28 | 2295.05 | 2294.14 | 1.68 | 2294.80 | 0.05403 | 5.07 | 15.76 | 16.19 |
| 7 | 280 | 80 | 2293.60 | 2294.80 | 1.20 | 2296.51 | 2295.34 | 1.74 | 2295.95 | 0.08484 | 5.81 | 13.77 | 16.21 |
| 8 | 260 | 80 | 2294.51 | 2296.19 | 1.68 | 2298.01 | 2296.77 | 2.26 | 2297.57 | 0.06417 | 5.98 | 13.37 | 12.21 |
| 9 | 240 | 80 | 2296.00 | 2297.52 | 1.52 | 2299.66 | 2298.16 | 2.16 | 2298.90 | 0.09557 | 6.49 | 12.33 | 13.44 |
| 10 | 220 | 80 | 2297.85 | 2299.24 | 1.39 | 2301.61 | 2299.97 | 2.12 | 2300.78 | 0.09251 | 6.81 | 11.74 | 11.60 |
| 11 | 203 | 80 | 2299.54 | 2300.97 | 1.43 | 2303.16 | 2301.64 | 2.10 | 2302.41 | 0.08875 | 6.55 | 12.21 | 12.39 |
| 12 | 197 | 80 | 2300.00 | 2301.61 | 1.61 | 2303.68 | 2302.24 | 2.24 | 2303.08 | 0.07625 | 6.37 | 12.55 | 11.86 |
| 13 | 180 | 80 | 2301.15 | 2303.57 | 2.42 | 2304.39 | 2303.58 | 2.43 | 2304.39 | 0.02001 | 4.02 | 19.92 | 13.79 |
| 14 | 160 | 80 | 2302.44 | 2304.12 | 1.68 | 2304.83 | 2304.22 | 1.78 | 2304.82 | 0.02433 | 3.73 | 21.46 | 19.25 |
| 15 | 140 | 80 | 2303.30 | 2304.54 | 1.24 | 2305.70 | 2304.91 | 1.61 | 2305.44 | 0.06257 | 4.77 | 16.77 | 21.08 |
| 16 | 120 | 80 | 2304.50 | 2305.76 | 1.26 | 2306.85 | 2306.10 | 1.60 | 2306.65 | 0.05201 | 4.61 | 17.35 | 19.99 |
| 17 | 100 | 80 | 2305.70 | 2306.89 | 1.19 | 2307.84 | 2307.19 | 1.49 | 2307.70 | 0.04599 | 4.31 | 18.57 | 21.60 |
| 18 | 80 | 80 | 2306.90 | 2307.94 | 1.04 | 2308.84 | 2308.21 | 1.31 | 2308.68 | 0.05393 | 4.19 | 19.08 | 26.04 |
| 19 | 60 | 80 | 2308.20 | 2309.25 | 1.05 | 2310.26 | 2309.56 | 1.36 | 2309.96 | 0.09319 | 4.46 | 17.95 | 33.69 |
| 20 | 40 | 80 | 2309.20 | 2310.53 | 1.33 | 2311.62 | 2310.89 | 1.69 | 2311.29 | 0.05032 | 4.87 | 19.69 | 33.46 |
| 21 | 20 | 80 | 2310.35 | 2311.60 | 1.25 | 2312.57 | 2311.93 | 1.58 | 2312.32 | 0.04723 | 4.71 | 20.94 | 34.83 |
| 22 | 0 | 80 | 2311.37 | 2312.47 | 1.10 | 2313.62 | 2312.86 | 1.49 | 2313.28 | 0.05708 | 4.96 | 18.62 | 29.67 |

# PROYECTO HIDROELECTRICO ALTO MAIPO

# BASIC ENGINEERING

CONTRACT AM-CO304

## ALFALFAL II POWER PLANT
## MANZANITO STREAM HYDRAULIC AXIS
## MANZANITO BRIDGE

| | | | | | | | |
|---|---|---|---|---|---|---|---|
| B | 10-01-08 | Information | R. Saraiva | R.Caro / H.Mery / A.Ugarte | E. Woolvett | R. Bennewitz / A. Lyngra | P. Alvarado |
| ISSUED | DATE | PURPOSE OF ISSUE | PREPARED BY | REVIEWED BY | APPROVED BY General Coordinator | APPROVED BY Project D. Asst D. | APPROVED BY AES GENER Project Lead |

CONSULTANTS

cade-idepe POCH Ingeniería Norconsult

**REVISION**

B

**No. 020-HI-INF-014**

# TABLE OF CONTENTS


| ITEM | CONTENTS | PAGE |
|---|---|---|
| 1. | INTRODUCTION | 1 |
| 2. | PURPOSE AND SCOPES | 2 |
| 3. | CALCULATION BASES | 3 |
| 3.1 | Hydraulic Axis on Natural Channels | 3 |
| 3.2 | Flood Flows | 5 |
| 3.3 | Channel cross sections | 5 |
| 3.4 | Roughness Coefficient | 7 |
| 3.5 | Border Conditions | 9 |
| 4. | RESULTS | 10 |
| 4.1 | Hydraulic Axis in a Natural (No Bridge) Situation | 10 |
| 4.2 | Hydraulic Axis in the Future (with Bridge) Situation | 14 |
| 5. | CONCLUSIONS | 15 |

ANNEX 1: Hydraulic Axis, No Bridge Situation

# 1. INTRODUCTION

The works of the El Alfalfal II Power Plant envisage catching water from the upper basin of the El Volcán River through four water intakes (El Morado, Las Placas, Colina and La Engorda), and conveying it through a tunnel (El Volcán) up to an intake well located on the south bank of the El Yeso River. This intake well also receives the river flow captured downstream of the El Yeso Reservoir, which added to that captured from the El Volcán River basin, is conveyed through a series of pressure pipes until it enters a construction window at the beginning of the power plant headrace tunnel. Figure 1.1 shows a diagram of the works of the power plant.

For the construction of the power plant headrace tunnel, an access road to the construction window VA-4 has been planned; the road is to cross the Manzanito Stream by a 25 m long 5 m wide bridge (see drawing 20-CA-PLA-027).

.

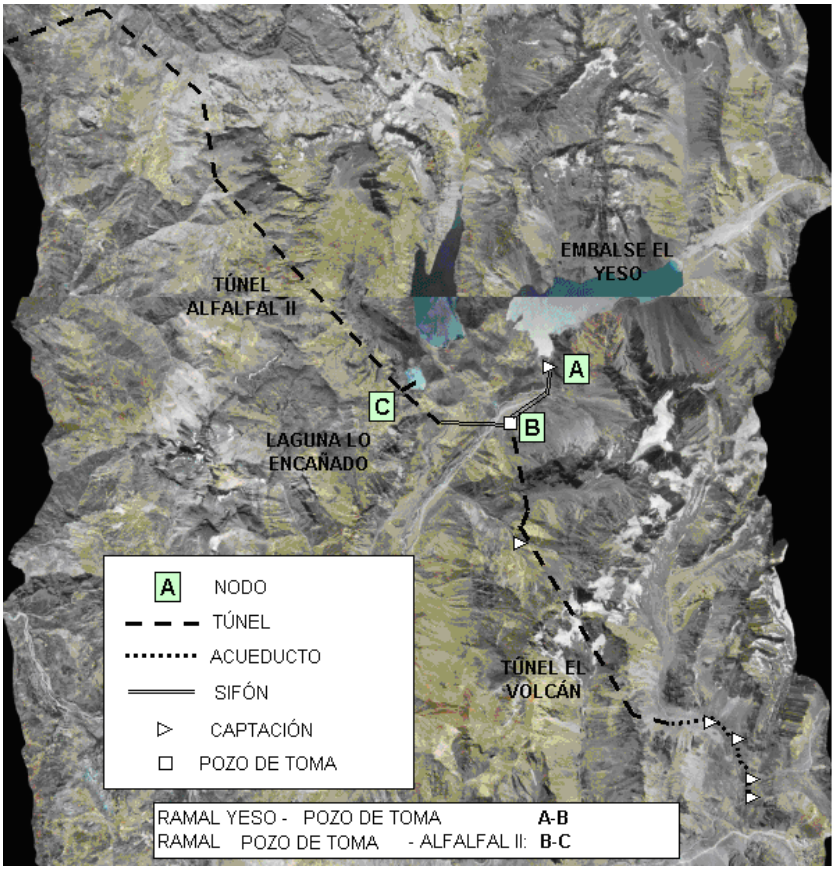


Figure 1.1: General diagram of the works of the El Alfalfal II Power Plant

## 2. PURPOSE AND SCOPES

The purpose of this report is to present the results obtained from the calculation of the Manzanito Stream hydraulic axis, some 2 km downstream of the Lo Encañado Lagoon, at the location envisaged for the Manzanito Bridge. The hydraulic levels will help to define the minimum elevation of the bridge platform, as well as the influence of the bridge on the hydraulic axis of the channel under natural conditions.

# 3. CALCULATION BASES

## 3.1 Hydraulic Axis on Natural Channels

The calculation of the hydraulic axis on a river (non-prismatic channel) is the determination of the free surface along the channel based on its characteristics, e.g. geometrical features, riverbed and river bank roughness, and flow rates.

The Manzanito Stream hydraulic axis has been calculated using the U.S Army Corps of Engineers' software program called HEC-RAS 3.1.3 (2005), which solves the energy balance equation (Ec. 3.1.1) by means of the standard step method.

$$h_2 + Z_2 + \frac{\alpha_2 V_2^2}{2g} = h_1 + Z_1 + \frac{\alpha_1 V_1^2}{2g} + h_e \qquad \text{(Ec.3.1.1)}$$

Where:

| | | |
|---|---|---|
| $h_i$ | : | Height in section i |
| $Z_i$ | : | Bottom level in section i |
| $\alpha_i$ | : | Coriolis coefficient in section i |
| $V_i$ | : | Velocity in section i |
| he | : | Head loss |

In this case, the water level in a section "i" is $Z_{hi}$:

$$Z_{hi} = h_i + Z_i \qquad \text{(Ec.3.1.2)}$$

The head loss ($h_e$) between two sections is the loss by friction plus the loss by contraction or expansion (singular losses). The head loss equation is as follows:

$$h_e = \langle J \rangle \cdot L + C \cdot \left| \frac{\alpha_2 V_2^2}{2g} - \frac{\alpha_1 V_1^2}{2g} \right| \qquad \text{(Ec.3.1.3)}$$

Where:

<J> : Head loss slope between the two cross sections

L : Distance between cross sections
$\alpha_i$ : Coriolis coefficient in section i
$V_i$ : Velocity in section i
C : Contraction or expansion head loss coefficient

Contraction and expansion coefficients depend on the nature of the transition. In general terms, transitions or geometric changes along a natural channel are gradual; therefore, no high head losses are incurred. According to the literature, an expansion coefficient of 0.3 and a contraction coefficient of 0.1 are recommended for gradual transitions. In the case of contractions caused by structures such as bridges and sewers, the recommended coefficients for expansion and contraction are 0.5 and 0.3, respectively.

For the calculation of frictional losses, the program uses the method called “Average Conveyance Equation”. It is expressed by the following equation:

$$< J > = \left( \frac{2Q}{K_1 + K_2} \right)^2 \qquad \text{(Ec.3.1.4)}$$

$$K = \frac{A \cdot R^{2/3}}{n} \qquad \text{(Ec.3.1.5)}$$

Where:

$K_i$ : Conveyance coefficient in section i
R: : Hydraulic radius
n : Manning’s roughness coefficient

The head loss slope in each section is calculated using Manning’s equation.

$$Q = \frac{\sqrt{J}}{n} \cdot R^{2/3} \cdot A = \sqrt{J} \cdot K \qquad \text{(Ec.3.1.6)}$$

## 3.2 Flood Flows

The flow rates used for calculating the hydraulic axis shown in table 3.2.1 were obtained from a water study balance. This is the worst design condition that may be expected in this channel, and has been considered appropriate in order to assess the likely impact of the bridge on the Manzanito Stream.

Table 3.2.1: Flood flows in the Manzanito Stream downstream of the Lo Encañado Lagoon

| Tr (years) | Flow Rate ($m^3/s$) |
|---|---|
| 2 | 55 |
| 5 | 65 |
| 10 | 80 |
| 25 | 95 |
| 50 | 110 |
| 100 | 130 |
| 200 | 145 |

## 3.3 Channel cross sections

Based on the 1:1,000 scale topographical mapping made by Geoexploraciones (2006) for the project, twenty-two (22) cross section profiles along each channel have been obtained for the zone where the bridge will be located. The hydraulic study considered an overall length of approximately 400 m, of which 200 m are upstream and 200 m are downstream of the bridge.

Figure 3.3.1 shows the cross section profiles considered in the calculation of hydraulic axes.

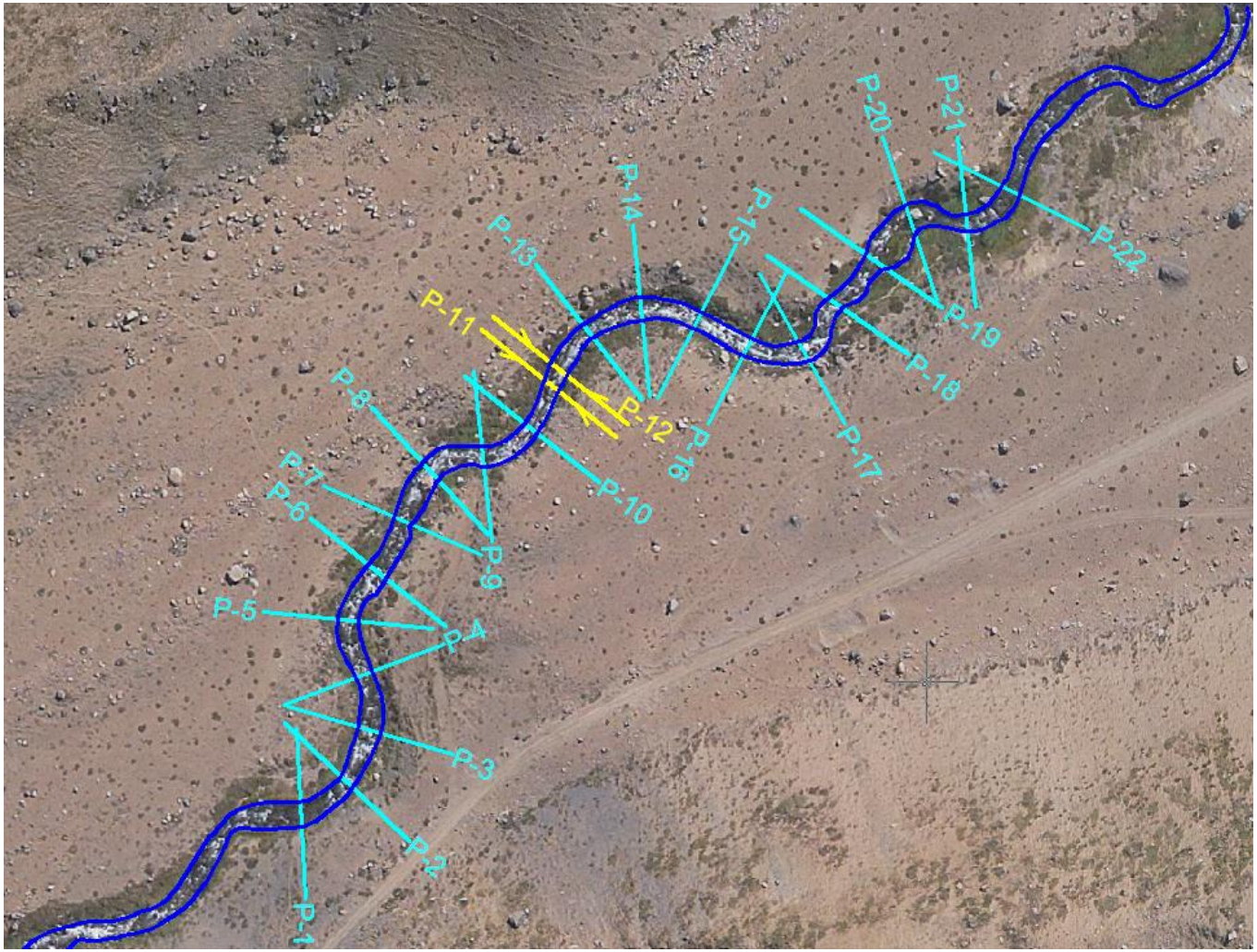


Figure 3.3.1: Location of cross section profiles for the bridge over the Manzanito Stream (Manzanito Bridge)

## 3.4 Roughness Coefficient

The Manzanito Stream in the stretch under study exhibits a granular bed with gross grain characteristics, together with the presence of boulders. Figures 3.4.1 and 3.4.2 are photographs of the river in the zone under study.

Cowan's method for determining the roughness coefficient was used to estimate the roughness of the main channel and of the flood zones on the river banks. The expression to determine Manning's coefficient is as follows:

$$n = (n_0 + n_0 + n_0 + n_0)m_5 \qquad \text{(Ec.3.4.1)}$$

Where:

- $n_0$ : Base roughness coefficient for a straight, uniform and smooth channel
- $n_1$ : Degree of irregularity in the section
- $n_2$ : Variation in the cross section
- $n_3$ : Effect of obstructions
- $n_4$ : Presence of vegetation
- $m_5$ : Correction factor for meandering

The results obtained are shown in the following table:

Table 3.4.1: Manzanito Stream roughness coefficients according to Cowan's method.

| Coefficient | Right Bank | Main Channel | Left Bank |
|---|---|---|---|
| $n_0$ | 0.028 | 0.028 | 0.028 |
| $n_1$ | 0.010 | 0.005 | 0.010 |
| $n_2$ | 0.005 | 0.005 | 0.005 |
| $n_3$ | 0.005 | 0.000 | 0.005 |
| $n_4$ | 0.005 | 0.005 | 0.005 |
| $m_5$ | 1.000 | 1.000 | 1.000 |
| n | 0.053 | 0.043 | 0.053 |

Finally, rounding up the figures, a value of n=0.045 was used for the main channel and of n=0.055 for the flood plains.

Figure 3.4.1: Estero Manzanito, a view downstream of the Lo Encañado Lagoon.

Figure 3.4.2: Manzanito Stream, at the drainage point of the Lo Encañado Lagoon.

## 3.5 Border Conditions

To calculate the hydraulic axis, in addition to geometrical and flow rate data, border conditions should be established according to the hydraulic controls existing in the channel under analysis.

In the event of a river runoff, the border condition is set from downstream upwards, while a torrent flow is conditioned from upstream downwards.

A mixed runoff has been assumed in this analysis, which means that two border conditions –one upstream and one downstream– are required. The condition inputted in the HEC-RAS in both cases was the normal runoff elevation, the calculation of which requires that slope data be fed into the software.

# 4. RESULTS

## 4.1 Hydraulic Axis in a Natural (No Bridge) Situation

Figure 4.1.1 shows a longitudinal profile with the results obtained from the Manzanito Stream hydraulic axis, in the zone where the access bridge to window VA-4will be located, for a flow rate equivalent to Tr=100 years. Detailed results are shown in Annex 1.

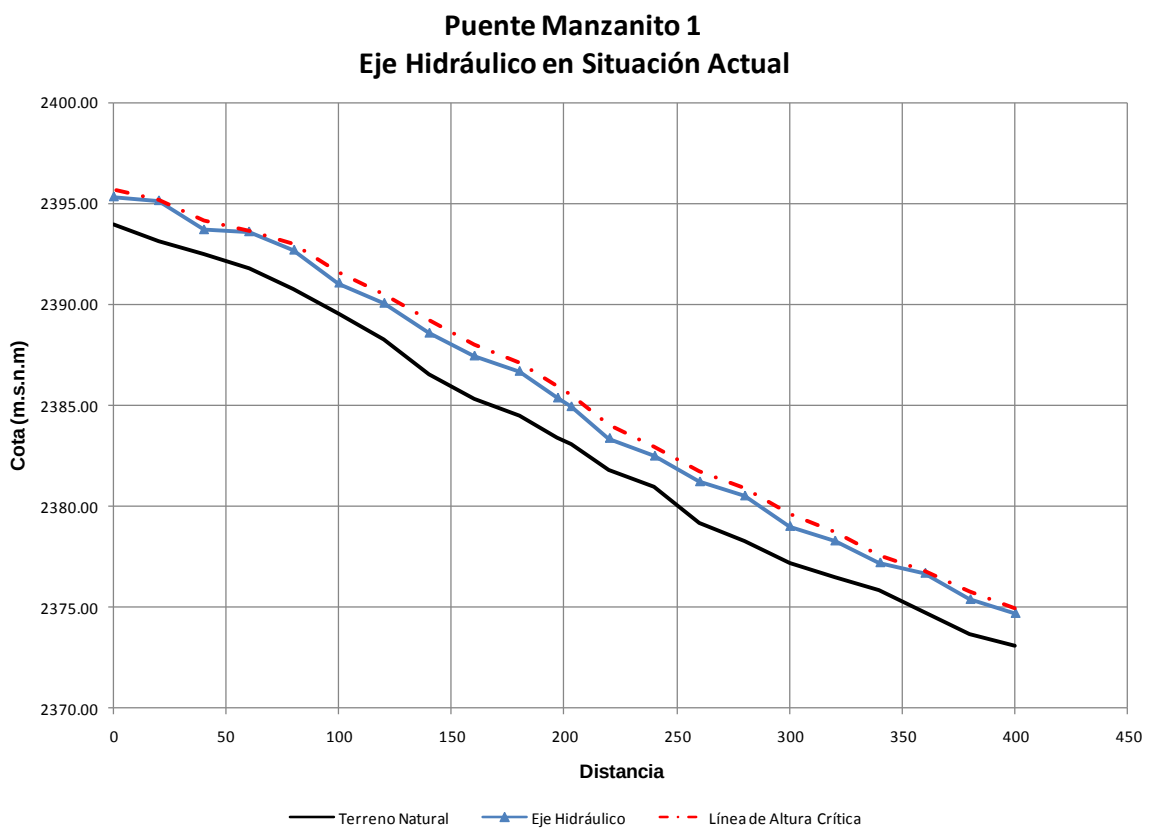


Figure 4.1.1: Manzanito Stream hydraulic axis. No bridge situation.

The Manzanito Stream runoff system in the stretch under analysis is equivalent to torrent, close to critical, conditions.

Table 4.1.1 summarizes runoff levels and elevations in the stretch under analysis. It may be seen in Figure 3.3.1 that the bridge would be located between profiles 11 and 12, where the hydraulic axis reaches a maximum elevation of 2,385.4 masl.

Pursuant to the recommendations submitted in document 020-HI-CDD-002, “Design Return Periods for Fluvial Systems,” GCAM, November 2007, the bridge platform

should be placed one meter above the maximum level of the hydraulic axis, i.e. at an elevation of 2,386.4 masl.

Table 4.1.1: Results for Tr=100 years

| Profile | X (m) | Z H (masl) | H (m) | Critical Z H (masl) | Critical H (m) |
|---|---|---|---|---|---|
| 1 | 400 | 2,374.71 | 1.61 | 2,374.98 | 1.88 |
| 2 | 380 | 2,375.40 | 1.70 | 2,375.79 | 2.09 |
| 3 | 360 | 2,376.70 | 1.93 | 2,376.85 | 2.08 |
| 4 | 340 | 2,377.22 | 1.35 | 2,377.60 | 1.73 |
| 5 | 320 | 2,378.30 | 1.80 | 2,378.76 | 2.26 |
| 6 | 300 | 2,379.02 | 1.84 | 2,379.64 | 2.46 |
| 7 | 280 | 2,380.53 | 2.23 | 2,380.93 | 2.63 |
| 8 | 260 | 2,381.23 | 2.03 | 2,381.77 | 2.57 |
| 9 | 240 | 2,382.50 | 1.52 | 2,382.96 | 1.98 |
| 10 | 220 | 2,383.38 | 1.59 | 2,384.03 | 2.24 |
| **11** | **203** | **2,384.95** | 1.87 | **2,385.51** | 2.43 |
| **12** | **197** | **2,385.38** | 1.98 | **2,385.94** | 2.54 |
| 13 | 180 | 2,386.70 | 2.16 | 2,387.10 | 2.56 |
| 14 | 160 | 2,387.46 | 2.09 | 2,388.03 | 2.66 |
| 15 | 140 | 2,388.59 | 2.02 | 2,389.22 | 2.65 |
| 16 | 120 | 2,390.07 | 1.77 | 2,390.53 | 2.23 |
| 17 | 100 | 2,391.07 | 1.47 | 2,391.59 | 1.99 |
| 18 | 80 | 2,392.70 | 1.90 | 2,392.97 | 2.17 |
| 19 | 60 | 2,393.61 | 1.81 | 2,393.62 | 1.82 |
| 20 | 40 | 2,393.71 | 1.16 | 2,394.16 | 1.61 |
| 21 | 20 | 2,395.15 | 2.01 | 2,395.16 | 2.02 |
| 22 | 0 | 2,395.34 | 1.34 | 2,395.68 | 1.68 |

Figures 4.1.2 and 4.1.3 show the results for profiles 11 and 12 corresponding to sections located immediately upstream and downstream of the bridge platform. Finally, figures 4.1.4 and 4.1.5 show the hydraulic axis in the sections located 20 m upstream and 20 m downstream of the bridge (profiles 10 and 13, respectively).

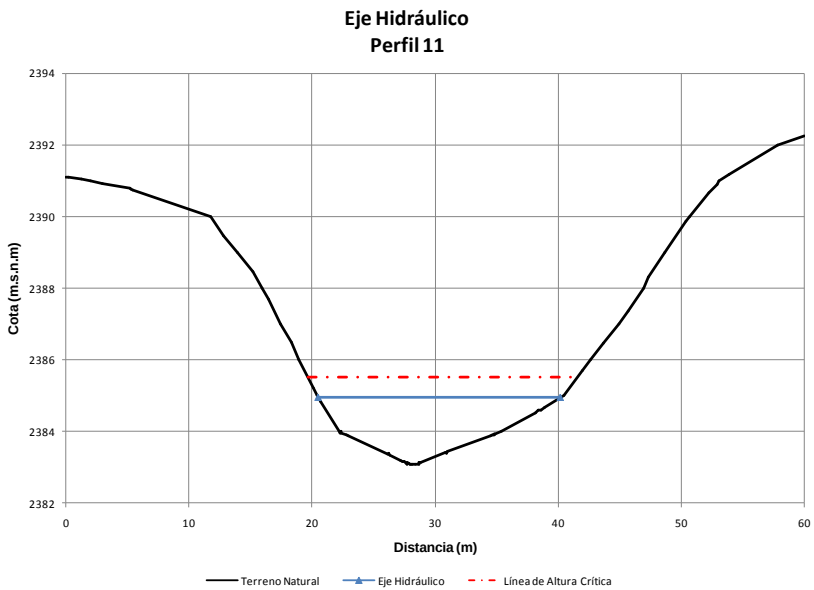


Figure 4.1.2: Results for profile 11

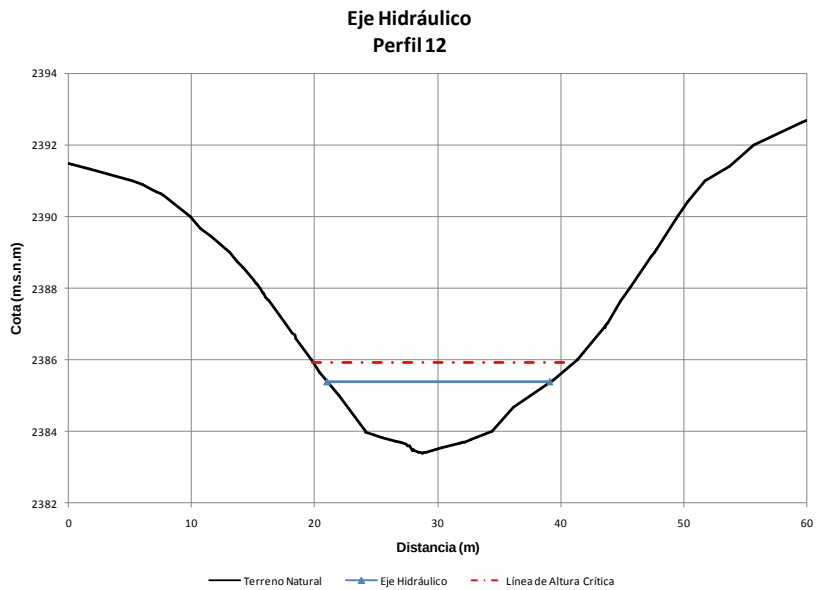


Figure 4.1.3: Results for profile 12

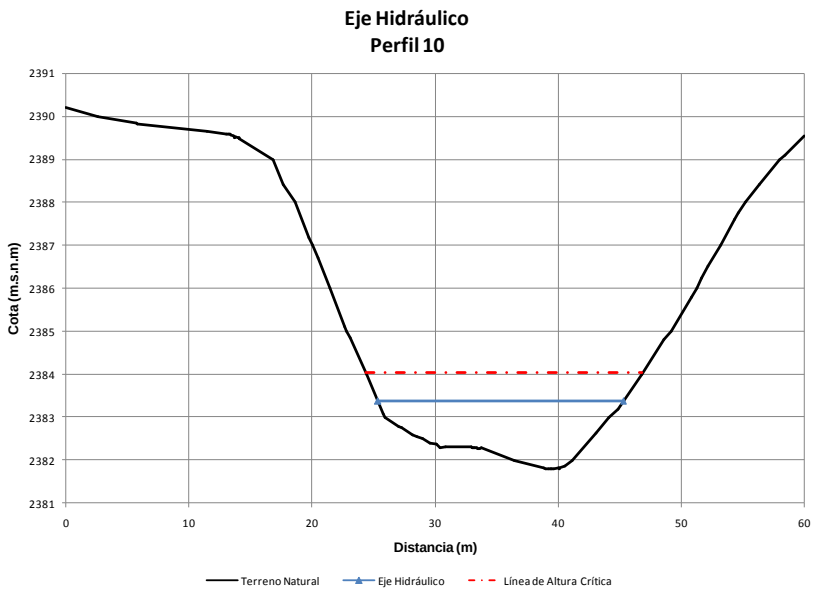


Figure 4.1.4: Results for profile 10

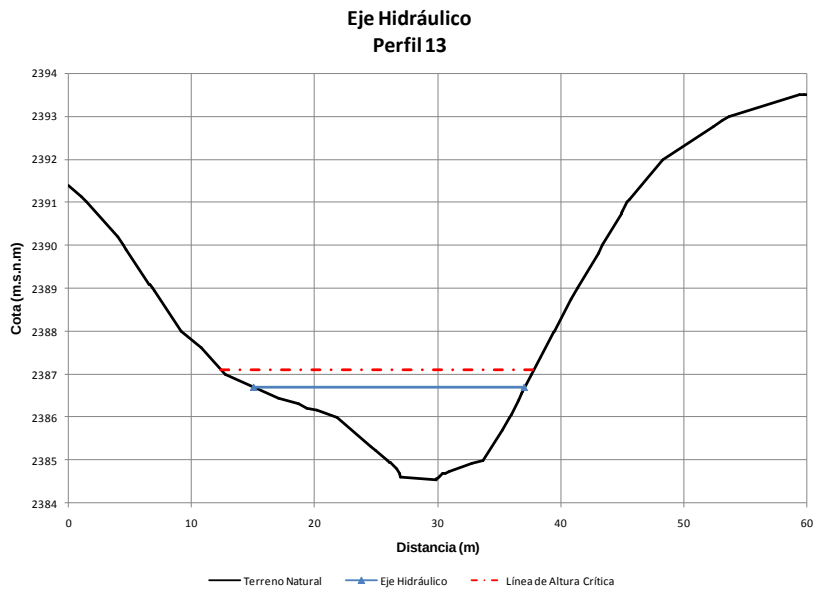


Figure 4.1.5: Results for profile 13

## 4.2 Hydraulic Axis in the Future (with Bridge) Situation

According to drawing 020-CA-PLA-27 the Manzanito Bridge is 25 m long and 5 m wide. The minimum elevation of the bridge platform is 2.389,42 masl, while the elevation of the lower beam is 2,388 masl. According to the calculations presented in the previous section, the bridge freeboard would be some 2.5 m (with respect to the lower beam). Figure 4.2.1 shows cross profile 11, including the access embankments and the bridge platform.

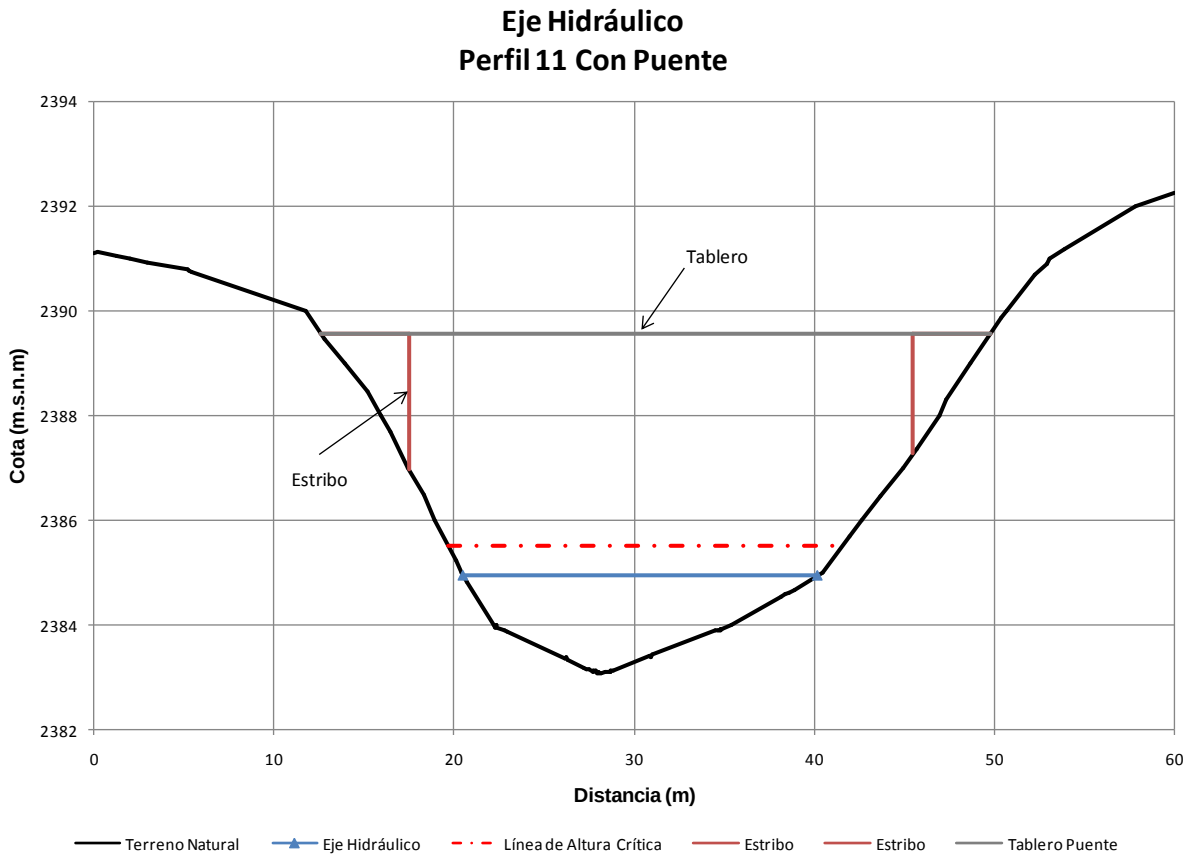


Figure 4.2.1: Manzanito Bridge Hydraulic Axis (Profile 11)

As may be seen from the above figure, the access embankments do not obstruct the channel. Thus, the result of the hydraulic axis in the 'with bridge' situation is equal to that presented in section 4.1 of this report.

## 5. CONCLUSIONS

The results obtained from the calculation of the hydraulic axis on the Manzanito Stream, where a bridge to access window VA-4 is to be located (see Table 4.1.1), make it possible to determine that the bridge does not alter the channel's hydraulic axis under natural conditions.

Finally, according to the preliminary design of the bridge, the lower beam is to be placed some 2.5 m above the hydraulic axis for a flood with a return period of 100 years (ZH=2,389.88 masl) calculated for the worst case conditions. This value is above the recommended minimum, which is 1 m; therefore, the bridge would not be affected by flooding of the stream.

# ANNEX 1

## Manzanito Stream Hydraulic Axis.
## Manzanito Bridge No. 1
## (No Bridge Situation)

Table A1.1: Results Manzanito Stream Hydraulic Axis, Manzanito Stream No. 1. Current Situation.

| Perfil | X (m) | Tr (años) | Caudal (m³/s) | Z Fondo (m.s.n.m) | Z H (m.s.n.m) | H (m) | Z Energía (m.s.n.m) | Z H Crítica (m.s.n.m) | H Crítica (m) | Z E Crítica (m.s.n.m) | J (m/m) | Velocidad (m/s) | Area Esc (m²) | Per. Mojado (m) | Radio Hidr. (m) | Ancho Sup. (m) | N º Froude |
|---|---|---|---|---|---|---|---|---|---|---|---|---|---|---|---|---|---|
| 1 | 400 | 2 | 55 | 2373.10 | 2374.26 | 1.16 | 2374.75 | 2374.35 | 1.25 | 2374.74 | 0.02973 | 3.08 | 17.84 | 24.73 | 0.72 | 24.47 | 1.15 |
| | | 5 | 65 | 2373.10 | 2374.33 | 1.23 | 2374.90 | 2374.45 | 1.35 | 2374.87 | 0.03208 | 3.35 | 19.39 | 25.10 | 0.77 | 24.83 | 1.21 |
| | | 10 | 80 | 2373.10 | 2374.41 | 1.31 | 2375.11 | 2374.58 | 1.48 | 2375.07 | 0.03502 | 3.71 | 21.57 | 25.61 | 0.84 | 25.30 | 1.28 |
| | | 25 | 95 | 2373.10 | 2374.51 | 1.41 | 2375.31 | 2374.71 | 1.61 | 2375.24 | 0.03579 | 3.97 | 23.96 | 26.16 | 0.92 | 25.81 | 1.31 |
| | | 50 | 110 | 2373.10 | 2374.59 | 1.49 | 2375.49 | 2374.83 | 1.73 | 2375.41 | 0.03627 | 4.19 | 26.26 | 26.67 | 0.98 | 26.30 | 1.34 |
| | | 100 | 130 | 2373.10 | 2374.71 | 1.61 | 2375.71 | 2374.98 | 1.88 | 2375.62 | 0.03665 | 4.45 | 29.22 | 27.32 | 1.07 | 26.91 | 1.36 |
| | | 200 | 145 | 2373.10 | 2374.79 | 1.69 | 2375.87 | 2375.09 | 1.99 | 2375.76 | 0.03667 | 4.62 | 31.41 | 27.80 | 1.13 | 27.35 | 1.38 |
| 2 | 380 | 2 | 55 | 2373.70 | 2374.75 | 1.05 | 2375.72 | 2375.07 | 1.37 | 2375.51 | 0.06192 | 4.38 | 12.54 | 17.76 | 0.71 | 17.54 | 1.66 |
| | | 5 | 65 | 2373.70 | 2374.85 | 1.15 | 2375.89 | 2375.19 | 1.49 | 2375.66 | 0.05947 | 4.53 | 14.34 | 18.74 | 0.77 | 18.49 | 1.64 |
| | | 10 | 80 | 2373.70 | 2374.99 | 1.29 | 2376.09 | 2375.36 | 1.66 | 2375.86 | 0.05445 | 4.64 | 17.24 | 20.35 | 0.85 | 20.07 | 1.60 |
| | | 25 | 95 | 2373.70 | 2375.13 | 1.43 | 2376.27 | 2375.51 | 1.81 | 2376.03 | 0.05246 | 4.72 | 20.13 | 22.53 | 0.89 | 22.22 | 1.58 |
| | | 50 | 110 | 2373.70 | 2375.25 | 1.55 | 2376.42 | 2375.63 | 1.93 | 2376.20 | 0.05082 | 4.79 | 22.94 | 24.50 | 0.94 | 24.15 | 1.57 |
| | | 100 | 130 | 2373.70 | 2375.40 | 1.70 | 2376.62 | 2375.79 | 2.09 | 2376.39 | 0.04831 | 4.89 | 26.58 | 26.53 | 1.00 | 26.15 | 1.55 |
| | | 200 | 145 | 2373.70 | 2375.50 | 1.80 | 2376.75 | 2375.90 | 2.20 | 2376.53 | 0.04677 | 4.96 | 29.22 | 27.85 | 1.05 | 27.44 | 1.54 |
| 3 | 360 | 2 | 55 | 2374.77 | 2376.06 | 1.29 | 2376.65 | 2376.22 | 1.45 | 2376.61 | 0.03297 | 3.39 | 16.22 | 21.07 | 0.77 | 20.82 | 1.23 |
| | | 5 | 65 | 2374.77 | 2376.21 | 1.44 | 2376.77 | 2376.35 | 1.58 | 2376.74 | 0.03071 | 3.31 | 19.62 | 25.01 | 0.78 | 24.71 | 1.19 |
| | | 10 | 80 | 2374.77 | 2376.39 | 1.62 | 2376.93 | 2376.49 | 1.72 | 2376.91 | 0.02951 | 3.27 | 24.44 | 30.80 | 0.79 | 30.47 | 1.17 |
| | | 25 | 95 | 2374.77 | 2376.49 | 1.72 | 2377.09 | 2376.61 | 1.84 | 2377.07 | 0.02898 | 3.41 | 27.87 | 32.58 | 0.86 | 32.22 | 1.17 |
| | | 50 | 110 | 2374.77 | 2376.59 | 1.82 | 2377.23 | 2376.72 | 1.95 | 2377.21 | 0.02894 | 3.55 | 31.00 | 34.09 | 0.91 | 33.71 | 1.18 |
| | | 100 | 130 | 2374.77 | 2376.70 | 1.93 | 2377.41 | 2376.85 | 2.08 | 2377.38 | 0.02919 | 3.73 | 34.89 | 35.87 | 0.97 | 35.47 | 1.20 |
| | | 200 | 145 | 2374.77 | 2376.78 | 2.01 | 2377.54 | 2376.94 | 2.17 | 2377.50 | 0.02960 | 3.86 | 37.57 | 37.06 | 1.01 | 36.63 | 1.22 |
| 4 | 340 | 2 | 55 | 2375.87 | 2376.91 | 1.04 | 2377.54 | 2377.11 | 1.24 | 2377.42 | 0.06149 | 3.52 | 15.65 | 30.71 | 0.51 | 30.47 | 1.57 |
| | | 5 | 65 | 2375.87 | 2376.96 | 1.09 | 2377.68 | 2377.19 | 1.32 | 2377.53 | 0.06474 | 3.76 | 17.29 | 31.90 | 0.54 | 31.65 | 1.62 |
| | | 10 | 80 | 2375.87 | 2377.03 | 1.16 | 2377.88 | 2377.31 | 1.44 | 2377.68 | 0.06882 | 4.08 | 19.62 | 33.52 | 0.59 | 33.26 | 1.70 |
| | | 25 | 95 | 2375.87 | 2377.10 | 1.23 | 2378.07 | 2377.40 | 1.53 | 2377.82 | 0.07248 | 4.38 | 21.71 | 34.80 | 0.62 | 34.53 | 1.76 |
| | | 50 | 110 | 2375.87 | 2377.15 | 1.28 | 2378.25 | 2377.49 | 1.62 | 2377.96 | 0.07577 | 4.65 | 23.67 | 35.96 | 0.66 | 35.67 | 1.82 |
| | | 100 | 130 | 2375.87 | 2377.22 | 1.35 | 2378.48 | 2377.60 | 1.73 | 2378.12 | 0.07986 | 4.98 | 26.12 | 37.34 | 0.70 | 37.04 | 1.89 |
| | | 200 | 145 | 2375.87 | 2377.27 | 1.40 | 2378.65 | 2377.69 | 1.82 | 2378.24 | 0.08276 | 5.21 | 27.85 | 38.27 | 0.73 | 37.96 | 1.94 |
| 5 | 320 | 2 | 55 | 2376.50 | 2377.76 | 1.26 | 2378.49 | 2377.95 | 1.45 | 2378.44 | 0.03615 | 3.79 | 14.50 | 17.05 | 0.85 | 16.71 | 1.30 |
| | | 5 | 65 | 2376.50 | 2377.85 | 1.35 | 2378.69 | 2378.09 | 1.59 | 2378.61 | 0.03793 | 4.05 | 16.04 | 17.69 | 0.91 | 17.32 | 1.34 |
| | | 10 | 80 | 2376.50 | 2377.97 | 1.47 | 2378.96 | 2378.26 | 1.76 | 2378.84 | 0.04034 | 4.40 | 18.17 | 18.55 | 0.98 | 18.14 | 1.40 |
| | | 25 | 95 | 2376.50 | 2378.08 | 1.58 | 2379.21 | 2378.41 | 1.91 | 2379.05 | 0.04248 | 4.71 | 20.18 | 19.38 | 1.04 | 18.94 | 1.46 |
| | | 50 | 110 | 2376.50 | 2378.18 | 1.68 | 2379.44 | 2378.58 | 2.08 | 2379.24 | 0.04458 | 4.99 | 22.05 | 20.11 | 1.10 | 19.64 | 1.50 |
| | | 100 | 130 | 2376.50 | 2378.30 | 1.80 | 2379.73 | 2378.76 | 2.26 | 2379.47 | 0.04658 | 5.31 | 24.49 | 21.03 | 1.16 | 20.52 | 1.55 |
| | | 200 | 145 | 2376.50 | 2378.38 | 1.88 | 2379.94 | 2378.88 | 2.38 | 2379.64 | 0.04802 | 5.53 | 26.21 | 21.65 | 1.21 | 21.13 | 1.59 |
| 6 | 300 | 2 | 55 | 2377.18 | 2378.41 | 1.23 | 2379.62 | 2378.79 | 1.61 | 2379.31 | 0.07044 | 4.87 | 11.30 | 15.07 | 0.75 | 14.73 | 1.77 |
| | | 5 | 65 | 2377.18 | 2378.51 | 1.33 | 2379.83 | 2378.92 | 1.74 | 2379.49 | 0.06829 | 5.09 | 12.76 | 15.53 | 0.82 | 15.15 | 1.77 |
| | | 10 | 80 | 2377.18 | 2378.64 | 1.46 | 2380.12 | 2379.11 | 1.93 | 2379.74 | 0.06606 | 5.39 | 14.83 | 16.16 | 0.92 | 15.72 | 1.77 |
| | | 25 | 95 | 2377.18 | 2378.76 | 1.58 | 2380.39 | 2379.28 | 2.10 | 2379.97 | 0.06439 | 5.65 | 16.80 | 16.74 | 1.00 | 16.24 | 1.77 |
| | | 50 | 110 | 2377.18 | 2378.88 | 1.70 | 2380.64 | 2379.45 | 2.27 | 2380.18 | 0.06317 | 5.89 | 18.69 | 17.27 | 1.08 | 16.72 | 1.78 |
| | | 100 | 130 | 2377.18 | 2379.02 | 1.84 | 2380.95 | 2379.64 | 2.46 | 2380.44 | 0.06181 | 6.15 | 21.12 | 17.97 | 1.18 | 17.36 | 1.78 |
| | | 200 | 145 | 2377.18 | 2379.12 | 1.94 | 2381.16 | 2379.78 | 2.60 | 2380.62 | 0.06113 | 6.33 | 22.91 | 18.53 | 1.24 | 17.88 | 1.78 |
| 7 | 280 | 2 | 55 | 2378.30 | 2379.81 | 1.51 | 2380.65 | 2380.03 | 1.73 | 2380.58 | 0.03693 | 4.06 | 13.56 | 14.65 | 0.93 | 14.06 | 1.32 |
| | | 5 | 65 | 2378.30 | 2379.92 | 1.62 | 2380.85 | 2380.17 | 1.87 | 2380.77 | 0.03721 | 4.27 | 15.21 | 15.29 | 1.00 | 14.65 | 1.34 |
| | | 10 | 80 | 2378.30 | 2380.08 | 1.78 | 2381.14 | 2380.37 | 2.07 | 2381.03 | 0.03749 | 4.57 | 17.52 | 16.03 | 1.09 | 15.33 | 1.36 |
| | | 25 | 95 | 2378.30 | 2380.22 | 1.92 | 2381.40 | 2380.54 | 2.24 | 2381.28 | 0.03722 | 4.81 | 19.74 | 16.61 | 1.19 | 15.83 | 1.38 |
| | | 50 | 110 | 2378.30 | 2380.35 | 2.05 | 2381.64 | 2380.71 | 2.41 | 2381.50 | 0.03690 | 5.02 | 21.89 | 17.14 | 1.28 | 16.29 | 1.38 |
| | | 100 | 130 | 2378.30 | 2380.53 | 2.23 | 2381.93 | 2380.93 | 2.63 | 2381.78 | 0.03607 | 5.25 | 24.75 | 17.84 | 1.39 | 16.89 | 1.38 |
| | | 200 | 145 | 2378.30 | 2380.65 | 2.35 | 2382.14 | 2381.07 | 2.77 | 2381.97 | 0.03557 | 5.40 | 26.84 | 18.34 | 1.46 | 17.33 | 1.39 |
| 8 | 260 | 2 | 55 | 2379.20 | 2380.57 | 1.37 | 2381.68 | 2380.93 | 1.73 | 2381.43 | 0.06350 | 4.66 | 11.81 | 15.56 | 0.76 | 15.15 | 1.68 |
| | | 5 | 65 | 2379.20 | 2380.68 | 1.48 | 2381.86 | 2381.06 | 1.86 | 2381.61 | 0.06012 | 4.81 | 13.52 | 16.30 | 0.83 | 15.85 | 1.66 |
| | | 10 | 80 | 2379.20 | 2380.83 | 1.63 | 2382.12 | 2381.24 | 2.04 | 2381.85 | 0.05643 | 5.03 | 15.91 | 17.12 | 0.93 | 16.62 | 1.64 |
| | | 25 | 95 | 2379.20 | 2380.96 | 1.76 | 2382.35 | 2381.41 | 2.21 | 2382.07 | 0.05400 | 5.23 | 18.18 | 17.86 | 1.02 | 17.31 | 1.63 |
| | | 50 | 110 | 2379.20 | 2381.09 | 1.89 | 2382.58 | 2381.57 | 2.37 | 2382.27 | 0.05284 | 5.41 | 20.32 | 18.62 | 1.09 | 18.03 | 1.63 |
| | | 100 | 130 | 2379.20 | 2381.23 | 2.03 | 2382.86 | 2381.77 | 2.57 | 2382.51 | 0.05187 | 5.65 | 23.00 | 19.50 | 1.18 | 18.84 | 1.63 |
| | | 200 | 145 | 2379.20 | 2381.33 | 2.13 | 2383.06 | 2381.90 | 2.70 | 2382.68 | 0.05147 | 5.82 | 24.91 | 20.07 | 1.24 | 19.38 | 1.64 |

Table A1.1: Results Manzanito Stream Hydraulic Axis, Manzanito Stream No. 1. Current Situation. (Continued)

| Perfil | X (m) | Tr (años) | Caudal ($m^3/s$) | Z Fondo (m.s.n.m) | Z H (m.s.n.m) | H (m) | Z Energía (m.s.n.m) | Z H Crítica (m.s.n.m) | H Crítica (m) | Z E Crítica (m.s.n.m) | J (m/m) | Velocidad (m/s) | Area Esc ($m^2$) | Per. Mojado (m) | Radio Hidr. (m) | Ancho Sup. (m) | N º Froude |
|---|---|---|---|---|---|---|---|---|---|---|---|---|---|---|---|---|---|
| 9 | 240 | 2 | 55 | 2380.98 | 2382.07 | 1.09 | 2382.76 | 2382.25 | 1.27 | 2382.69 | 0.04331 | 3.68 | 14.95 | 21.06 | 0.71 | 20.76 | 1.38 |
| | | 5 | 65 | 2380.98 | 2382.14 | 1.16 | 2382.93 | 2382.37 | 1.39 | 2382.84 | 0.04488 | 3.94 | 16.49 | 21.52 | 0.77 | 21.20 | 1.43 |
| | | 10 | 80 | 2380.98 | 2382.24 | 1.26 | 2383.18 | 2382.52 | 1.54 | 2383.05 | 0.04724 | 4.31 | 18.58 | 22.08 | 0.84 | 21.72 | 1.49 |
| | | 25 | 95 | 2380.98 | 2382.33 | 1.35 | 2383.42 | 2382.66 | 1.68 | 2383.24 | 0.04955 | 4.64 | 20.49 | 22.57 | 0.91 | 22.18 | 1.54 |
| | | 50 | 110 | 2380.98 | 2382.41 | 1.43 | 2383.65 | 2382.78 | 1.80 | 2383.42 | 0.05171 | 4.94 | 22.26 | 23.03 | 0.97 | 22.60 | 1.59 |
| | | 100 | 130 | 2380.98 | 2382.50 | 1.52 | 2383.94 | 2382.96 | 1.98 | 2383.64 | 0.05421 | 5.31 | 24.50 | 23.59 | 1.04 | 23.13 | 1.65 |
| | | 200 | 145 | 2380.98 | 2382.57 | 1.59 | 2384.14 | 2383.08 | 2.10 | 2383.79 | 0.05582 | 5.55 | 26.10 | 23.98 | 1.09 | 23.49 | 1.68 |
| 10 | 220 | 2 | 55 | 2381.79 | 2382.89 | 1.10 | 2384.14 | 2383.28 | 1.49 | 2383.74 | 0.09193 | 4.96 | 11.08 | 17.52 | 0.63 | 17.26 | 1.98 |
| | | 5 | 65 | 2381.79 | 2382.97 | 1.18 | 2384.35 | 2383.40 | 1.61 | 2383.90 | 0.09130 | 5.22 | 12.46 | 18.20 | 0.68 | 17.92 | 2.00 |
| | | 10 | 80 | 2381.79 | 2383.07 | 1.28 | 2384.65 | 2383.56 | 1.77 | 2384.13 | 0.09036 | 5.56 | 14.39 | 18.95 | 0.76 | 18.64 | 2.02 |
| | | 25 | 95 | 2381.79 | 2383.17 | 1.38 | 2384.91 | 2383.71 | 1.92 | 2384.33 | 0.08860 | 5.85 | 16.24 | 19.53 | 0.83 | 19.17 | 2.03 |
| | | 50 | 110 | 2381.79 | 2383.26 | 1.47 | 2385.17 | 2383.85 | 2.06 | 2384.53 | 0.08683 | 6.11 | 17.99 | 19.93 | 0.90 | 19.54 | 2.03 |
| | | 100 | 130 | 2381.79 | 2383.38 | 1.59 | 2385.47 | 2384.03 | 2.24 | 2384.77 | 0.08409 | 6.41 | 20.28 | 20.44 | 0.99 | 19.98 | 2.03 |
| | | 200 | 145 | 2381.79 | 2383.46 | 1.67 | 2385.69 | 2384.15 | 2.36 | 2384.94 | 0.08243 | 6.61 | 21.93 | 20.80 | 1.05 | 20.30 | 2.03 |
| 11 | 203 | 2 | 55 | 2383.08 | 2384.39 | 1.31 | 2385.48 | 2384.74 | 1.66 | 2385.22 | 0.06685 | 4.64 | 11.85 | 16.34 | 0.73 | 15.92 | 1.72 |
| | | 5 | 65 | 2383.08 | 2384.47 | 1.39 | 2385.70 | 2384.86 | 1.78 | 2385.39 | 0.06819 | 4.92 | 13.22 | 16.96 | 0.78 | 16.51 | 1.75 |
| | | 10 | 80 | 2383.08 | 2384.59 | 1.51 | 2386.00 | 2385.04 | 1.96 | 2385.62 | 0.06850 | 5.26 | 15.21 | 17.70 | 0.86 | 17.20 | 1.78 |
| | | 25 | 95 | 2383.08 | 2384.70 | 1.62 | 2386.26 | 2385.19 | 2.11 | 2385.83 | 0.06909 | 5.53 | 17.17 | 18.62 | 0.92 | 18.09 | 1.81 |
| | | 50 | 110 | 2383.08 | 2384.81 | 1.73 | 2386.49 | 2385.33 | 2.25 | 2386.03 | 0.06778 | 5.74 | 19.16 | 19.37 | 0.99 | 18.80 | 1.82 |
| | | 100 | 130 | 2383.08 | 2384.95 | 1.87 | 2386.75 | 2385.51 | 2.43 | 2386.27 | 0.06522 | 5.95 | 21.83 | 20.31 | 1.07 | 19.69 | 1.80 |
| | | 200 | 145 | 2383.08 | 2385.04 | 1.96 | 2386.94 | 2385.64 | 2.56 | 2386.45 | 0.06360 | 6.11 | 23.73 | 20.85 | 1.14 | 20.18 | 1.80 |
| 12 | 197 | 2 | 55 | 2383.40 | 2384.65 | 1.25 | 2385.96 | 2385.08 | 1.68 | 2385.60 | 0.07133 | 5.07 | 10.86 | 13.77 | 0.79 | 13.40 | 1.80 |
| | | 5 | 65 | 2383.40 | 2384.77 | 1.37 | 2386.16 | 2385.23 | 1.83 | 2385.79 | 0.06770 | 5.22 | 12.45 | 14.51 | 0.86 | 14.10 | 1.77 |
| | | 10 | 80 | 2383.40 | 2384.93 | 1.53 | 2386.41 | 2385.41 | 2.01 | 2386.03 | 0.06321 | 5.40 | 14.83 | 15.62 | 0.95 | 15.16 | 1.74 |
| | | 25 | 95 | 2383.40 | 2385.07 | 1.67 | 2386.65 | 2385.59 | 2.19 | 2386.26 | 0.06039 | 5.56 | 17.07 | 16.60 | 1.03 | 16.09 | 1.72 |
| | | 50 | 110 | 2383.40 | 2385.21 | 1.81 | 2386.86 | 2385.75 | 2.35 | 2386.46 | 0.05789 | 5.70 | 19.29 | 17.52 | 1.10 | 16.97 | 1.71 |
| | | 100 | 130 | 2383.40 | 2385.38 | 1.98 | 2387.12 | 2385.94 | 2.54 | 2386.71 | 0.05488 | 5.85 | 22.23 | 18.67 | 1.19 | 18.06 | 1.68 |
| | | 200 | 145 | 2383.40 | 2385.49 | 2.09 | 2387.30 | 2386.07 | 2.67 | 2386.89 | 0.05334 | 5.96 | 24.32 | 19.43 | 1.25 | 18.78 | 1.67 |
| 13 | 180 | 2 | 55 | 2384.54 | 2386.01 | 1.47 | 2386.89 | 2386.29 | 1.75 | 2386.78 | 0.04029 | 4.16 | 13.23 | 14.70 | 0.90 | 14.23 | 1.38 |
| | | 5 | 65 | 2384.54 | 2386.13 | 1.59 | 2387.09 | 2386.44 | 1.90 | 2386.96 | 0.04224 | 4.36 | 14.93 | 16.03 | 0.93 | 15.52 | 1.42 |
| | | 10 | 80 | 2384.54 | 2386.27 | 1.73 | 2387.36 | 2386.62 | 2.08 | 2387.18 | 0.04603 | 4.64 | 17.23 | 17.94 | 0.96 | 17.38 | 1.49 |
| | | 25 | 95 | 2384.54 | 2386.39 | 1.85 | 2387.60 | 2386.79 | 2.25 | 2387.38 | 0.04775 | 4.86 | 19.56 | 19.55 | 1.00 | 18.95 | 1.53 |
| | | 50 | 110 | 2384.54 | 2386.52 | 1.98 | 2387.79 | 2386.93 | 2.39 | 2387.56 | 0.04748 | 5.00 | 22.01 | 20.99 | 1.05 | 20.36 | 1.53 |
| | | 100 | 130 | 2384.54 | 2386.70 | 2.16 | 2387.99 | 2387.10 | 2.56 | 2387.79 | 0.04332 | 5.03 | 25.82 | 22.74 | 1.14 | 22.03 | 1.48 |
| | | 200 | 145 | 2384.54 | 2386.79 | 2.25 | 2388.16 | 2387.21 | 2.67 | 2387.94 | 0.04360 | 5.18 | 27.97 | 23.69 | 1.18 | 22.96 | 1.50 |
| 14 | 160 | 2 | 55 | 2385.37 | 2386.74 | 1.37 | 2387.92 | 2387.13 | 1.76 | 2387.69 | 0.05562 | 4.81 | 11.44 | 13.01 | 0.88 | 12.47 | 1.60 |
| | | 5 | 65 | 2385.37 | 2386.85 | 1.48 | 2388.17 | 2387.33 | 1.96 | 2387.88 | 0.05620 | 5.08 | 12.78 | 13.48 | 0.95 | 12.90 | 1.63 |
| | | 10 | 80 | 2385.37 | 2387.00 | 1.63 | 2388.50 | 2387.56 | 2.19 | 2388.11 | 0.05611 | 5.42 | 14.77 | 14.15 | 1.04 | 13.49 | 1.65 |
| | | 25 | 95 | 2385.37 | 2387.15 | 1.78 | 2388.77 | 2387.72 | 2.35 | 2388.30 | 0.05748 | 5.63 | 16.86 | 15.51 | 1.09 | 14.79 | 1.68 |
| | | 50 | 110 | 2385.37 | 2387.29 | 1.92 | 2388.98 | 2387.87 | 2.50 | 2388.47 | 0.06049 | 5.76 | 19.08 | 17.62 | 1.08 | 16.85 | 1.73 |
| | | 100 | 130 | 2385.37 | 2387.46 | 2.09 | 2389.20 | 2388.03 | 2.66 | 2388.68 | 0.06844 | 5.85 | 22.23 | 22.03 | 1.01 | 21.20 | 1.82 |
| | | 200 | 145 | 2385.37 | 2387.54 | 2.17 | 2389.40 | 2388.14 | 2.77 | 2388.83 | 0.07039 | 6.05 | 23.95 | 23.02 | 1.04 | 22.16 | 1.86 |
| 15 | 140 | 2 | 55 | 2386.57 | 2387.85 | 1.28 | 2389.18 | 2388.29 | 1.72 | 2388.84 | 0.06677 | 5.11 | 10.76 | 12.82 | 0.84 | 12.34 | 1.75 |
| | | 5 | 65 | 2386.57 | 2387.97 | 1.40 | 2389.40 | 2388.44 | 1.87 | 2389.04 | 0.06419 | 5.29 | 12.29 | 13.51 | 0.91 | 12.99 | 1.73 |
| | | 10 | 80 | 2386.57 | 2388.14 | 1.57 | 2389.69 | 2388.65 | 2.08 | 2389.30 | 0.06144 | 5.51 | 14.53 | 14.53 | 1.00 | 13.88 | 1.72 |
| | | 25 | 95 | 2386.57 | 2388.29 | 1.72 | 2389.94 | 2388.84 | 2.27 | 2389.54 | 0.05923 | 5.70 | 16.67 | 15.41 | 1.08 | 14.71 | 1.71 |
| | | 50 | 110 | 2386.57 | 2388.43 | 1.86 | 2390.18 | 2389.01 | 2.44 | 2389.76 | 0.05749 | 5.87 | 18.75 | 16.22 | 1.16 | 15.47 | 1.70 |
| | | 100 | 130 | 2386.57 | 2388.59 | 2.02 | 2390.48 | 2389.22 | 2.65 | 2390.01 | 0.05603 | 6.08 | 21.38 | 17.21 | 1.24 | 16.40 | 1.70 |
| | | 200 | 145 | 2386.57 | 2388.71 | 2.14 | 2390.68 | 2389.36 | 2.79 | 2390.19 | 0.05547 | 6.23 | 23.28 | 17.93 | 1.30 | 17.08 | 1.70 |
| 16 | 120 | 2 | 55 | 2388.30 | 2389.49 | 1.19 | 2390.36 | 2389.75 | 1.45 | 2390.23 | 0.04831 | 4.13 | 13.33 | 17.16 | 0.78 | 16.89 | 1.48 |
| | | 5 | 65 | 2388.30 | 2389.58 | 1.28 | 2390.55 | 2389.87 | 1.57 | 2390.40 | 0.04846 | 4.36 | 14.91 | 17.74 | 0.84 | 17.43 | 1.50 |
| | | 10 | 80 | 2388.30 | 2389.71 | 1.41 | 2390.81 | 2390.05 | 1.75 | 2390.63 | 0.04829 | 4.64 | 17.23 | 18.57 | 0.93 | 18.22 | 1.52 |
| | | 25 | 95 | 2388.30 | 2389.84 | 1.54 | 2391.05 | 2390.21 | 1.91 | 2390.84 | 0.04781 | 4.88 | 19.47 | 19.35 | 1.01 | 18.95 | 1.54 |
| | | 50 | 110 | 2388.30 | 2389.94 | 1.64 | 2391.27 | 2390.35 | 2.05 | 2391.04 | 0.04779 | 5.10 | 21.57 | 20.05 | 1.08 | 19.61 | 1.55 |
| | | 100 | 130 | 2388.30 | 2390.07 | 1.77 | 2391.55 | 2390.53 | 2.23 | 2391.29 | 0.04771 | 5.38 | 24.17 | 20.72 | 1.17 | 20.22 | 1.57 |
| | | 200 | 145 | 2388.30 | 2390.16 | 1.86 | 2391.75 | 2390.65 | 2.35 | 2391.46 | 0.04760 | 5.58 | 26.01 | 21.09 | 1.23 | 20.54 | 1.58 |

Table A1.1: Results Manzanito Stream Hydraulic Axis, Manzanito Stream No. 1. Current Situation. (Continued)

| Perfil | X (m) | Tr (años) | Caudal ($m^3/s$) | Z Fondo (m.s.n.m) | Z H (m.s.n.m) | H (m) | Z Energía (m.s.n.m) | Z H Crítica (m.s.n.m) | H Crítica (m) | Z E Crítica (m.s.n.m) | J (m/m) | Velocidad (m/s) | Area Esc ($m^2$) | Per. Mojado (m) | Radio Hidr. (m) | Ancho Sup. (m) | N º Froude |
|---|---|---|---|---|---|---|---|---|---|---|---|---|---|---|---|---|---|
| 17 | 100 | 2 | 55 | 2389.60 | 2390.57 | 0.97 | 2391.62 | 2390.90 | 1.30 | 2391.33 | 0.07693 | 4.54 | 12.11 | 19.13 | 0.63 | 18.95 | 1.81 |
| | | 5 | 65 | 2389.60 | 2390.65 | 1.05 | 2391.81 | 2391.02 | 1.42 | 2391.48 | 0.07606 | 4.77 | 13.62 | 19.81 | 0.69 | 19.61 | 1.83 |
| | | 10 | 80 | 2389.60 | 2390.76 | 1.16 | 2392.06 | 2391.17 | 1.57 | 2391.69 | 0.07446 | 5.05 | 15.84 | 20.82 | 0.76 | 20.59 | 1.84 |
| | | 25 | 95 | 2389.60 | 2390.86 | 1.26 | 2392.28 | 2391.30 | 1.70 | 2391.88 | 0.07298 | 5.29 | 17.96 | 21.72 | 0.83 | 21.46 | 1.85 |
| | | 50 | 110 | 2389.60 | 2390.95 | 1.35 | 2392.49 | 2391.43 | 1.83 | 2392.06 | 0.07116 | 5.48 | 20.06 | 22.53 | 0.89 | 22.25 | 1.84 |
| | | 100 | 130 | 2389.60 | 2391.07 | 1.47 | 2392.73 | 2391.59 | 1.99 | 2392.29 | 0.06790 | 5.71 | 22.77 | 23.25 | 0.98 | 22.92 | 1.83 |
| | | 200 | 145 | 2389.60 | 2391.16 | 1.56 | 2392.91 | 2391.71 | 2.11 | 2392.45 | 0.06519 | 5.85 | 24.77 | 23.63 | 1.05 | 23.26 | 1.81 |
| 18 | 80 | 2 | 55 | 2390.80 | 2392.03 | 1.23 | 2392.76 | 2392.20 | 1.40 | 2392.68 | 0.04187 | 3.79 | 14.51 | 19.06 | 0.76 | 18.82 | 1.38 |
| | | 5 | 65 | 2390.80 | 2392.14 | 1.34 | 2392.92 | 2392.32 | 1.52 | 2392.84 | 0.03987 | 3.91 | 16.60 | 20.04 | 0.83 | 19.76 | 1.36 |
| | | 10 | 80 | 2390.80 | 2392.29 | 1.49 | 2393.13 | 2392.52 | 1.72 | 2393.05 | 0.03765 | 4.07 | 19.63 | 21.37 | 0.92 | 21.05 | 1.35 |
| | | 25 | 95 | 2390.80 | 2392.43 | 1.63 | 2393.32 | 2392.67 | 1.87 | 2393.24 | 0.03537 | 4.19 | 22.70 | 22.64 | 1.00 | 22.28 | 1.32 |
| | | 50 | 110 | 2390.80 | 2392.55 | 1.75 | 2393.50 | 2392.81 | 2.01 | 2393.42 | 0.03405 | 4.30 | 25.56 | 23.77 | 1.08 | 23.37 | 1.31 |
| | | 100 | 130 | 2390.80 | 2392.70 | 1.90 | 2393.72 | 2392.97 | 2.17 | 2393.63 | 0.03309 | 4.46 | 29.13 | 25.11 | 1.16 | 24.66 | 1.31 |
| | | 200 | 145 | 2390.80 | 2392.81 | 2.01 | 2393.87 | 2393.09 | 2.29 | 2393.78 | 0.03244 | 4.57 | 31.75 | 26.06 | 1.22 | 25.58 | 1.31 |
| 19 | 60 | 2 | 55 | 2391.80 | 2392.99 | 1.19 | 2393.38 | 2392.99 | 1.19 | 2393.38 | 0.02124 | 2.76 | 19.94 | 25.38 | 0.79 | 25.01 | 0.99 |
| | | 5 | 65 | 2391.80 | 2393.09 | 1.29 | 2393.51 | 2393.09 | 1.29 | 2393.51 | 0.02076 | 2.90 | 22.42 | 26.01 | 0.86 | 25.59 | 0.99 |
| | | 10 | 80 | 2391.80 | 2393.22 | 1.42 | 2393.71 | 2393.22 | 1.42 | 2393.71 | 0.02024 | 3.08 | 25.95 | 26.95 | 0.96 | 26.48 | 0.99 |
| | | 25 | 95 | 2391.80 | 2393.34 | 1.54 | 2393.88 | 2393.34 | 1.54 | 2393.88 | 0.02043 | 3.27 | 29.03 | 27.76 | 1.05 | 27.24 | 1.01 |
| | | 50 | 110 | 2391.80 | 2393.45 | 1.65 | 2394.05 | 2393.47 | 1.67 | 2394.05 | 0.02013 | 3.42 | 32.21 | 28.57 | 1.13 | 28.01 | 1.02 |
| | | 100 | 130 | 2391.80 | 2393.61 | 1.81 | 2394.25 | 2393.62 | 1.82 | 2394.25 | 0.01918 | 3.54 | 36.69 | 29.70 | 1.24 | 29.07 | 1.01 |
| | | 200 | 145 | 2391.80 | 2393.72 | 1.92 | 2394.39 | 2393.73 | 1.93 | 2394.39 | 0.01870 | 3.64 | 39.88 | 30.47 | 1.31 | 29.81 | 1.00 |
| 20 | 40 | 2 | 55 | 2392.55 | 2393.31 | 0.76 | 2394.15 | 2393.58 | 1.03 | 2393.94 | 0.07643 | 4.05 | 13.57 | 25.31 | 0.54 | 25.07 | 1.76 |
| | | 5 | 65 | 2392.55 | 2393.37 | 0.82 | 2394.31 | 2393.67 | 1.12 | 2394.07 | 0.07604 | 4.29 | 15.16 | 25.90 | 0.59 | 25.65 | 1.78 |
| | | 10 | 80 | 2392.55 | 2393.46 | 0.91 | 2394.53 | 2393.81 | 1.26 | 2394.24 | 0.07482 | 4.58 | 17.47 | 26.73 | 0.65 | 26.46 | 1.80 |
| | | 25 | 95 | 2392.55 | 2393.54 | 0.99 | 2394.73 | 2393.93 | 1.38 | 2394.39 | 0.07417 | 4.84 | 19.64 | 27.50 | 0.71 | 27.21 | 1.82 |
| | | 50 | 110 | 2392.55 | 2393.62 | 1.07 | 2394.91 | 2394.03 | 1.48 | 2394.54 | 0.07440 | 5.04 | 21.83 | 28.79 | 0.76 | 28.49 | 1.84 |
| | | 100 | 130 | 2392.55 | 2393.71 | 1.16 | 2395.14 | 2394.16 | 1.61 | 2394.72 | 0.07532 | 5.29 | 24.58 | 30.43 | 0.81 | 30.12 | 1.87 |
| | | 200 | 145 | 2392.55 | 2393.78 | 1.23 | 2395.29 | 2394.25 | 1.70 | 2394.84 | 0.07546 | 5.45 | 26.62 | 31.57 | 0.84 | 31.24 | 1.88 |
| 21 | 20 | 2 | 55 | 2393.14 | 2394.46 | 1.32 | 2394.89 | 2394.46 | 1.32 | 2394.89 | 0.02066 | 2.91 | 18.89 | 21.70 | 0.87 | 21.36 | 0.99 |
| | | 5 | 65 | 2393.14 | 2394.57 | 1.43 | 2395.04 | 2394.57 | 1.43 | 2395.04 | 0.02008 | 3.06 | 21.27 | 22.26 | 0.96 | 21.87 | 0.99 |
| | | 10 | 80 | 2393.14 | 2394.72 | 1.58 | 2395.26 | 2394.72 | 1.58 | 2395.26 | 0.01966 | 3.25 | 24.60 | 23.07 | 1.07 | 22.61 | 1.00 |
| | | 25 | 95 | 2393.14 | 2394.86 | 1.72 | 2395.45 | 2394.87 | 1.73 | 2395.45 | 0.01902 | 3.40 | 27.96 | 23.95 | 1.17 | 23.44 | 0.99 |
| | | 50 | 110 | 2393.14 | 2394.99 | 1.85 | 2395.63 | 2395.00 | 1.86 | 2395.63 | 0.01879 | 3.54 | 31.03 | 24.72 | 1.26 | 24.17 | 1.00 |
| | | 100 | 130 | 2393.14 | 2395.15 | 2.01 | 2395.86 | 2395.16 | 2.02 | 2395.86 | 0.01839 | 3.72 | 34.90 | 25.40 | 1.37 | 24.77 | 1.00 |
| | | 200 | 145 | 2393.14 | 2395.25 | 2.11 | 2396.02 | 2395.28 | 2.14 | 2396.02 | 0.01852 | 3.87 | 37.46 | 25.86 | 1.45 | 25.18 | 1.01 |
| 22 | 0 | 2 | 55 | 2394.00 | 2394.86 | 0.86 | 2395.50 | 2395.04 | 1.04 | 2395.44 | 0.04256 | 3.56 | 15.46 | 22.60 | 0.68 | 22.42 | 1.37 |
| | | 5 | 65 | 2394.00 | 2394.94 | 0.94 | 2395.65 | 2395.13 | 1.13 | 2395.58 | 0.04256 | 3.75 | 17.35 | 23.49 | 0.74 | 23.29 | 1.39 |
| | | 10 | 80 | 2394.00 | 2395.05 | 1.05 | 2395.87 | 2395.27 | 1.27 | 2395.78 | 0.04254 | 4.01 | 19.93 | 24.33 | 0.82 | 24.09 | 1.41 |
| | | 25 | 95 | 2394.00 | 2395.14 | 1.14 | 2396.07 | 2395.41 | 1.41 | 2395.96 | 0.04261 | 4.27 | 22.23 | 24.71 | 0.90 | 24.42 | 1.43 |
| | | 50 | 110 | 2394.00 | 2395.23 | 1.23 | 2396.27 | 2395.53 | 1.53 | 2396.13 | 0.04260 | 4.51 | 24.41 | 25.08 | 0.97 | 24.74 | 1.45 |
| | | 100 | 130 | 2394.00 | 2395.34 | 1.34 | 2396.51 | 2395.68 | 1.68 | 2396.35 | 0.04261 | 4.78 | 27.19 | 25.55 | 1.06 | 25.15 | 1.47 |
| | | 200 | 145 | 2394.00 | 2395.42 | 1.42 | 2396.68 | 2395.79 | 1.79 | 2396.50 | 0.04254 | 4.96 | 29.22 | 25.93 | 1.13 | 25.50 | 1.48 |

# ALTO MAIPO HYDROLECTRIC PROJECT

# BASIC ENGINEERING

AM-CO304 CONTRACT

## HYDRAULIC AXIS STUDIES

## MAIPO RIVER AT THE DISCHARGE AREA OF LAS LAJAS POWER PLANT

| | | | | | | | |
|---|---|---|---|---|---|---|---|
| B | 04-12-07 | Approval and Comment | A. Ugarte | H. Mery | E. Woolvett | R. Bennewitz / A. Lyngra | P. Alvarado |
| A | 05-11-07 | Internal Coordination | A. Ugarte | H. Mery | E. Woolvett | R. Bennewitz / A. Lyngra | |
| ISSUING | DATE | PURPOSE OF ISSUING | PREPARED | REVISED | General Coordinator APROVED | D. Project D. Attached APROVED | Project . AES GENER APPROVED |

CONSULTANTS

cade-idepe POCH Ingeniería Norconsult

**REVISE**

B

**N°: 020- HI-EST-001**

## INDEX

**ITEM** **CONTENT** **PAGE**


1. INTRODUCTION..... 1

2. MAIPO RIVER FLOWS IN FLOWS..... 4

3. HYDRAULIC AXIS CALCULATION..... 5

3.1 Calculation Method. Theoretical Definition of the Problem..... 5

3.2 Hydraulic axis calculation.....6

3.2.1 Topographic background.....7

3.2.2 Determination of roughness coefficient.....7

3.2.3 Experimental values of n.....9

3.3 Hydraulic axis calculation.....10

# 1. INTRODUCTION

Las Lajas power plant generates water resources from the discharges of the Alfalfal and Alfalfal II power plants, besides of the contribution of the intermediate basin of the Colorado River. After generating its waters, this power plant gives them out to a discharge tunnel which has a length of 13.14 Km and which discharges its waters to the Maipo River approximately at elevation 817, at a section located downstream the flow meter station "Maipo at El Manzano" of DGA. The discharge zone can be seen in Figure 4 and in the plane 630-CI-PLA-049 rev A shows the discharge works.

Upstream the discharge, there is an old precinct which was destined for the extraction of sand, a sand deposit which is currently abandoned, a place where it is thought for muck disposals from the excavations of the discharge tunnel of the power plant.

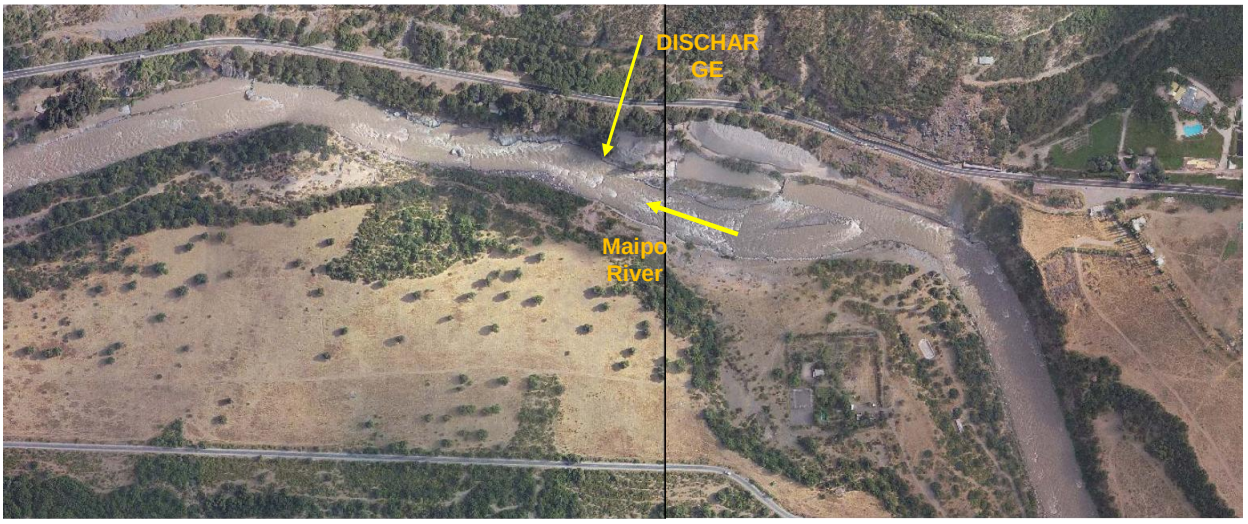


Figure 1. Discharge area of Las Lajas Power Plant

In this report the calculation done to determine the hydraulic axis levels of Maipo river in floods are presented, at the area where the discharge zone and the river protections of the muck disposal which is contemplated to be built in the location stated in Figure 4.

The photographs of Figure 2 and 3 are seen in the previously described area, which the position of the flow meter station of DGA and the facilities for sand extraction can be seen, which are abandoned today.

Figure 2. Upstream of discharge zone at Maipo river view

Figure 2. Downstream of discharge zone at Maipo river view

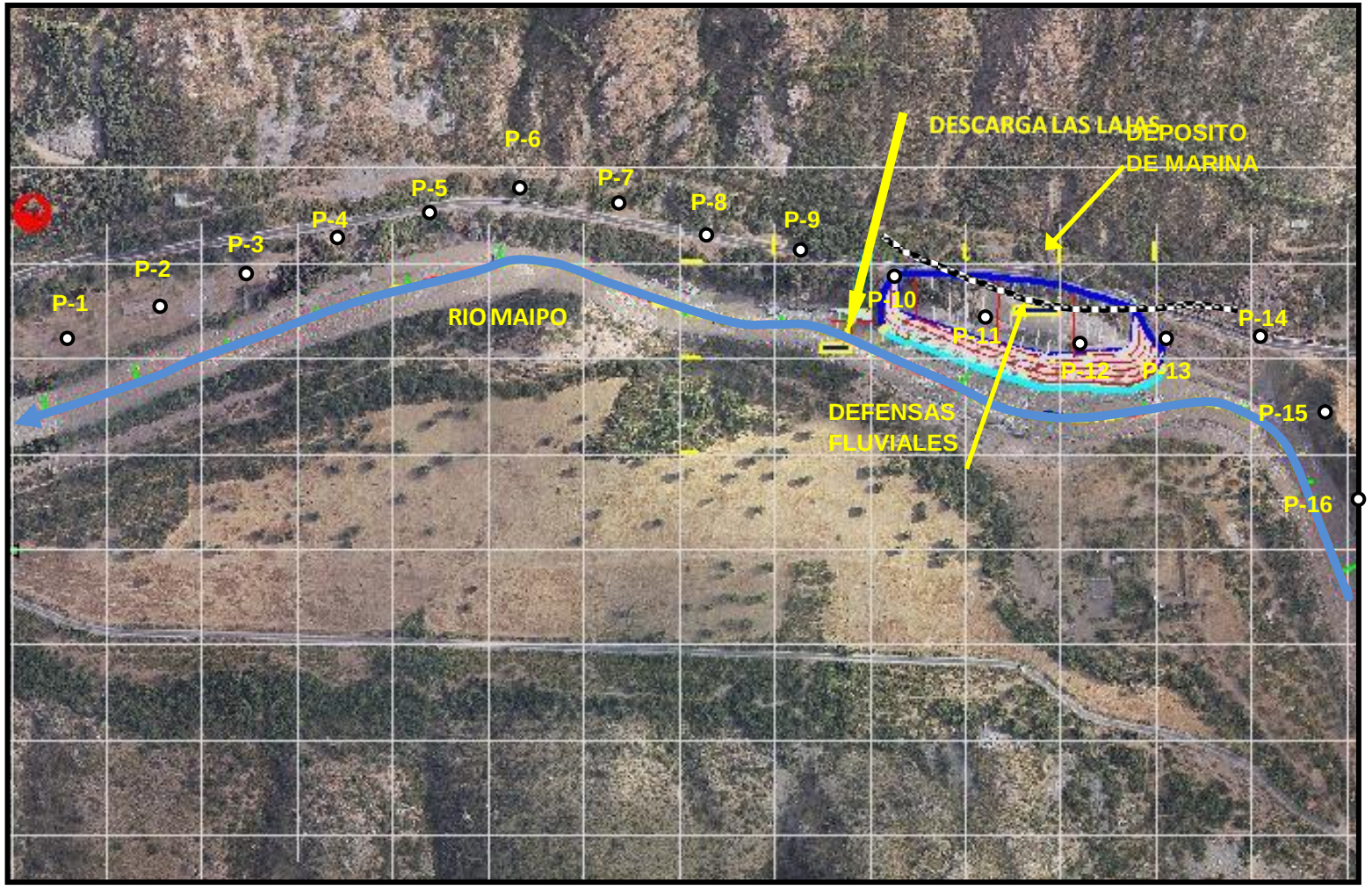


Figure 4. Location of Profiles Maipo River Discharge Zone

## 2. MAIPO RIVER FLOWS IN FLOODS

The results of the hydrological studies developed for the project have been used for this study. The results are presented in Table 1 and graphically in Figure 5.

TABLE 1
Design Flood Flows
Las Lajas Power Plant
Discharge

| **T (years)** | **Flow ($m^3/s$)** |
|---|---|
| 2 | 370 |
| 5 | 530 |
| 10 | 650 |
| 25 | 640 |
| 50 | 1300 |
| 100 | 1780 |

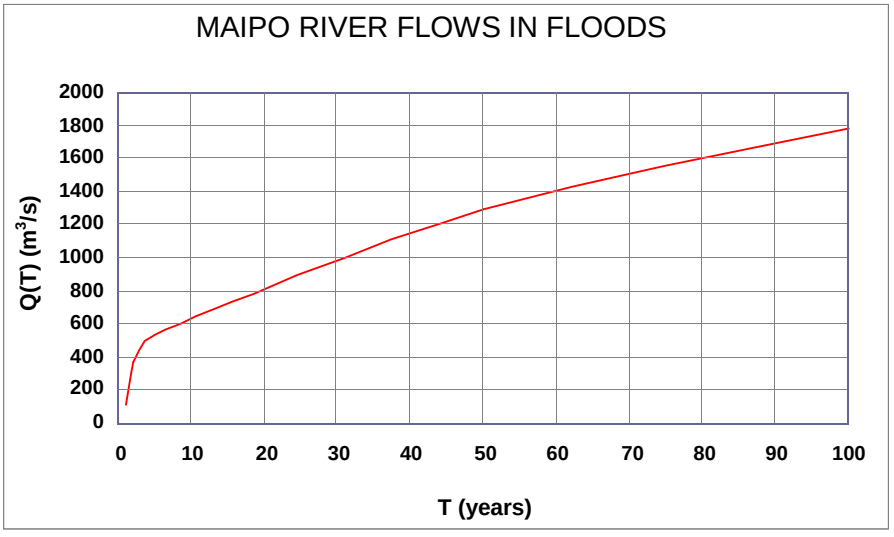


Figure 5

# 3. HYDRAULIC AXIS CALCULATION

## 3.1 Calculation Method. Theoretical Definition of the Problem

In order to calculate the hydraulic axis, the elevation of the free surface along the river should be defined. Its calculation involves the use of a set of variables which are not always known and relations which can hardly be simplified. In the case of natural waterways, the task is even more complex, since involves the calculation of frequently irregular sections.

One of the most widely known and used methodologies is the standard step (Standard Step Method), in which the water levels are calculated from a section to another solving the energy equation in an iterative way:

$$h_2 + Z_2 + \frac{\alpha_2 V_2^2}{2g} = h_1 + Z_1 + \frac{\alpha_1 V_1^2}{2g} + h_e \qquad (1)$$

With:

| | | |
|---|---|---|
| $h_1$, $h_2$ | = | Depth of water in each one of the adjoining transversal sections. |
| $Z_1$, $Z_2$ | = | Bottom elevation of two adjoining transversal sections. |
| $V_1$, $V_2$ | = | Average speeds in the transversal sections. |
| $\alpha_1$, $\alpha_2$ | = | Distribution coefficient of speeds of Coriolis. |
| g | = | Acceleration of universal gravitation. |
| $h_e$ | = | Load loss. |

In this case, the water levels in an "i" section is $Z_{ehi}$:

$$Z_{ehi} \square h_i \;\; Z_i$$

The load loss ($h_e$) between two sections is assessed as frictional loss plus the loss by contraction or expansion (singular losses). The equation for the load loss is the following:

$$h_e = \langle J \rangle \cdot L + C \cdot \left| \frac{\alpha_2 V_2^2}{2g} - \frac{\alpha_1 V_1^2}{2g} \right| \qquad (2)$$

$$\cdot L \quad C \cdot \quad \frac{\square_2 V_2}{} - \frac{\square_1 V_1}{}$$

Where: L = Distance between consecutive transversal sections.

<J> = Slope of the load loss between two transversal sections.

C = Load loss coefficient by contraction or expansion

The contraction and expansion coefficients depend on the transition nature. In general, along a natural flow, the transitions or geometric changes are gradual, therefore there are no great load losses. According to the literature, it is recommended for gradual transitions, an expansion coefficient of 0.3 and contraction of 0.1.

The calculation is done with HEC-RAS program. This program counts with different alternatives to calculate the frictional load losses between two consecutive sections. For this determination it is considered the method called "Average Conveyance Equation" (Average Hydraulic Conductivity Coefficient). Its expressions are the following:

$$< J > = \left( \frac{2Q}{K_1 + K_2} \right)^2 \quad con \quad K = \frac{A \cdot R^{2/3}}{n} \qquad (3)$$

The load loss slope in each section is calculated according Manning's traditional equation.

$$Q = \frac{\sqrt{J}}{n} \cdot R^{2/3} \cdot A = \sqrt{J} \cdot K \qquad (4)$$

3.2 Hydraulic axis calculation

In order to calculate the hydraulic axis in natural flows, through the use of the equations described with singularities and simple or mixed regimens, the program HEC-RAS version 3.1.3 (May 2005) has been used, whose use has been standardized in United States and it has been generalized for our country as well.

The general procedure taken for defining the stated hydraulic axis, consists of:

- Obtaining basic data: transversal sections, distance between them.
- Determination of roughness coefficients.
- Theoretical definition of the problem to be studied: determination of type of run-off.

In order to determine the hydraulic axis is necessary to have a series of basic background which are described next:

### 3.2.1 Topographic Background

Form the topographic survey on, with the Transported Laser system, the data from 16 transversal profiles in the area of study were obtained, and these have been numbered from downstream to upstream and separated in 100 m each one. The location of these profiles can be seen in Figure 4. In this case, a total length of 1.500 m was considered for the hydraulic analysis with 900 m located downstream the discharge and 600 m upstream, tranche were the river protection area is located described in chapter 1.

Over the base of this background the profile shape was determined, out of which the transversal sections used in the calculations were obtained.

### 3.2.2 Theoretical determination of roughness coefficient

An important subject in the hydraulic study of the Maipo river is the definition of the roughness coefficient in the waterway in its different tranches. According to the available background and the Photographs of Figures 2 and 3, the waterway in the discharge, at El Manzano area, presents a granular, coarse and extended river bed, with a well-defined main flow, with little vegetation at the banks.

In this case, Manning's roughness coefficients have been estimated from the background obtained in field and from specialized literature.

First of all, the roughness coefficient associated to main flow and to the flood areas at the river bank were estimated using Cowan's method, which considers the following expression for determining n:

$$n = (n_0 + n_1 + n_2 + n_3 + n_4) \cdot m_5$$

Where:

$n_0$ : Roughness coefficient base

$n_1$ : Irregularity degree of the section

$n_2$ : Variation of the section

$n_3$ : Obstruction effects

$n_4$ : Vegetation density

$m_5$ : Frequency of meanders

The obtained results are presented in the following chart:

Table 2. Maipo River Roughness Coefficient. Cowan's Method.

| TRANCHE | $n_0$ | $n_1$ | $n_2$ | $n_3$ | $n_4$ | $m_5$ | n |
|---|---|---|---|---|---|---|---|
| Main Flow | 0.028 | 0.005 | 0.000 | 0.010 | 0.000 | 1.000 | 0.043 |
| Left Bank | 0.028 | 0.010 | 0.005 | 0.010 | 0.005 | 1.000 | 0.058 |
| Right Bank | 0.028 | 0.010 | 0.005 | 0.010 | 0.005 | 1.000 | 0.058 |

As second method, the values of n for the main flow were determined using the equation proposed by A. Ugarte and M. Madrid, published in the "Engineering 94. Proceeding of the 1994 Conference, Volume 1, American Society of Civil Engineers". According to this publication, the following specific equation can be used to determine Manning's coefficient in granular river beds:

$$n = \frac{(10 \cdot D_{50\%})^{1/6}}{21} \quad (1)$$

$$n = \frac{(3{,}4 \cdot D_{84\%})^{1/6}}{21} \quad (2)$$

For the hydraulic study of the Maipo river, a granulometric analysis with the river bed material has been counted with the following characteristic diameters:

$$D_{84\%} = 241{,}91 \text{ mm}$$
$$D_{50\%} = 79{,}91 \text{ mm}$$

With these values, the coefficient value n = 0.046 can be calculated; this value which corresponds to the roughness of the main flow is practically equal to the one obtained with Cowan's method; besides is concordant with the values mentioned in the book "Roughness Characteristics of Natural Channels" U.S. Geological Survey Water-Supply Paper 1849.

### 3.2.3 Experimental values of n

These Manning's coefficient calculations must be compared with the values determined with in-field measures, which are obtained from Manuel Madrid's work, UTFSM 1992. The values for Maipo river at San Alfonso and at El Manzano are presented in the following chart.

Table 3. Experimental values of n in the Maipo river

| Flow | Q | A | V | P | L | Rh | F N° | J | $D_{50\%}$ | $D_{84\%}$ | $n_{exp}$ | $Rh/D_{84\%}$ | $n_{50\%}$ | $n_{84\%}$ |
|---|---|---|---|---|---|---|---|---|---|---|---|---|---|---|
| | $m^3/s$ | $m^2$ | m/s | m | m | m | | m/m | mm | mm | | | Eq. 1 | Eq. 2 |
| Maipo River at El Manzano | 367.33 | 105.24 | 3.49 | 51.11 | 49.10 | 2.06 | 0762 | 0.00820 | 79.91 | 241.91 | 0.0420 | 8.51 | 0.0459 | 0.0458 |
| | 348.49 | 105.49 | 3.30 | 49.02 | 47.40 | 2.15 | 0707 | 0.00820 | 79.91 | 241.91 | 0.0457 | 8.90 | 0.0459 | 0.0458 |
| | 207.00 | 67.81 | 3.05 | 45.33 | 44.17 | 1.50 | 0787 | 0.00800 | 79.91 | 241.91 | 0.0383 | 6.18 | 0.0459 | 0.0458 |
| | 183.00 | 62.23 | 2.94 | 46.28 | 44.20 | 1.34 | 0792 | 0.00812 | 79.91 | 241.91 | 0.0373 | 5.56 | 0.0459 | 0.0458 |
| | 112.00 | 48.77 | 2.30 | 44.46 | 43.70 | 1.10 | 0694 | 0.00730 | 79.91 | 241.91 | 0.0396 | 4.53 | 0.0459 | 0.0458 |
| Maipo in San Alfonso | 229.41 | 62.15 | 3.69 | 36.10 | 32.70 | 1.72 | 0.86 | 0.01540 | 100.42 | 303.51 | 0.0483 | 5.67 | 0.0477 | 0.0475 |
| | 195.00 | 59.61 | 3.27 | 33.28 | 30.10 | 1.79 | 0.74 | 0.01080 | 100.42 | 303.51 | 0.0469 | 5.90 | 0.0477 | 0.0475 |
| | 126.82 | 47.19 | 2.69 | 32.62 | 30.30 | 1.45 | 0.69 | 0.01000 | 100.42 | 303.51 | 0.0476 | 4.77 | 0.0477 | 0.0475 |
| | 66.50 | 31.07 | 2.14 | 30.70 | 28.20 | 1.01 | 0.65 | 0.01080 | 100.42 | 303.51 | 0.0489 | 3.33 | 0.0477 | 0.0475 |

In this chart, the values of n calculated with the expressions based on the granulometry of the flow have been included. When reviewing these results, some discrepancies are observed for Maipo at El Manzano, especially for the flows lower to 200 $m^3/s$, which may be explained by the influence of other factors, such as the relation $R_h/D_{sed}$.

Over the base of these results and those obtained in the previous point, the following values for n have been adopted:

- Main Flow: n minimum = 0.040; n maximum = 0.045;
- Flood plains: n = 0.055

## 3.3 Hydraulic axis calculation

Over the calculation method previously described, and from the 16 topographic profiles taken, the calculation of the hydraulic axis in the area of study was carried out, with the flows determined in chapter 2. The calculation was done for T = 2 to 100 years range of return period. Two situations were analyzed in this study:

- Current Situation (SA): It considers Maipo river without protection works.
- Situation with project (CP): It considers the river protections in the right bank of the flow, between profiles 10 and 13.

In order to define the edge condition for the beginning of the calculation, a preliminary analysis was carried out, where the run-off of Maipo river in the project zone was confirmed which is practically of river or subcritical, but very near to the crisis. Because of the above it was supposed that in the downstream section, profile 1, there is "pseudo-normal" run-off, with i = 0.0045, which corresponds to the bottom slope of the flow in that area; the calculation mode used corresponded to the mixed regime mode, that is to say, that it can alternatively have torrent or river according to the condition of the flow.

The results obtained are presented in Table 4 (SA) and in Table 5 (CP), and graphically in Figure 6.

Together with the above, the hydraulic axis for a n = 0.040 in the main flow was calculated, for the two situations considered, whose results are presented in Tables 6 and 7.

When analyzing the result in both situations considered, the run-off of the river from profiles 1 to 6, and also between profiles 14 to 16 can be seen. On the contrary between profiles 7 to 13 there are run-off near to the crisis, a water ledge under profile 14, in SA and a water ledge under profile 10 for the situation with defenses in the waterway.

When comparing both cases, is observed that in the tranches located downstream of the river protections (P1-P9), the hydraulic axis of Maipo river is not altered with the inclusion of these works; in the tranche located upstream the protections, the alterations are minor, reaching an average of difference of heights lower to 10% and speed changes of 0.6 m/s for the T = 100 years case.

In the case of the area corresponding to the river defenses (P10-P13), the differences of level are in average lower to 1 m and the maximum variations of speed on the order of 2.5 m/s, specially due to the appearance or disappearance of hydraulic ledges which are produced in this tranche, both in the current situation as with the project.

The level changes mentioned before, can be seen in the chart of Figure 6 and in transversal profiles included in Annexes 1 and 2.

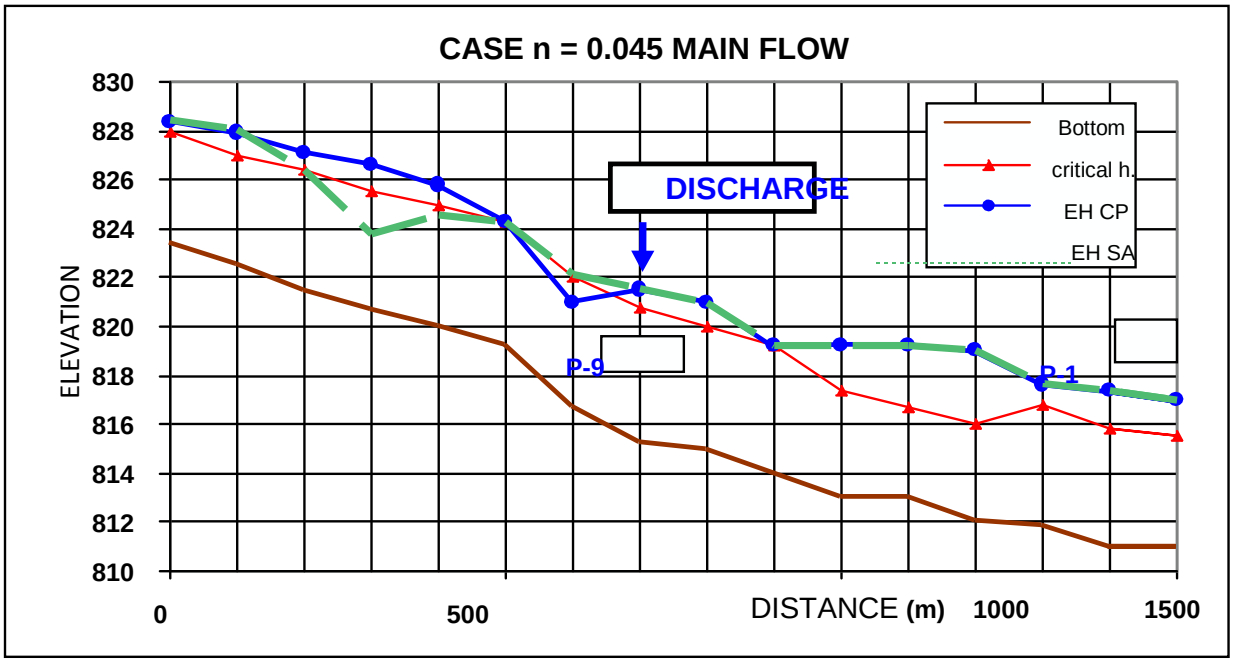


Figure 6. Maipo River Hydraulic Axis T = 100 Years

Together with the above, in Figures of Annexes 1 and 2 the transversal profiles of the flow are presented, with the water levels corresponding to the flood of T = 100 years of return period.

Table 4. Current Situation Hydraulic Axis ($n_{main\ flow}$ = 0.045)

| PROFILE | x | T | Total Q | bottom Z | H | EH ELEVATION | POWER C. | J | $V_{C.MAIN}$ | A | A. SUP | Froude N° |
|---|---|---|---|---|---|---|---|---|---|---|---|---|
| | | years | (m3/s) | (m) | (m) | (m) | (m) | (m/m) | (m/s) | ($m^2$) | (m) | |
| 16 | 0 | 100 | 1780 | 823.39 | 4.99 | 828.38 | 829.99 | 0.0086130 | 5.63 | 320.22 | 73.21 | 0.84 |
| | | 50 | 1300 | 823.39 | 4.21 | 827.60 | 828.85 | 0.0085440 | 4.95 | 263.98 | 71.37 | 0.81 |
| | | 5 | 530 | 823.39 | 2.57 | 825.96 | 826.59 | 0.0088890 | 3.54 | 149.92 | 66.94 | 0.75 |
| | | 2 | 370 | 823.39 | 2.08 | 825.47 | 825.97 | 0.0093010 | 3.14 | 117.99 | 65.50 | 0.75 |
| 15 | 100 | 100 | 1780 | 822.57 | 5.43 | 828.00 | 829.16 | 0.0056730 | 4.80 | 377.94 | 83.83 | 0.69 |
| | | 50 | 1300 | 822.57 | 4.56 | 827.13 | 828.06 | 0.0057880 | 4.27 | 307.16 | 79.76 | 0.67 |
| | | 5 | 530 | 822.57 | 2.78 | 825.35 | 825.83 | 0.0059480 | 3.07 | 172.71 | 70.76 | 0.63 |
| | | 2 | 370 | 822.57 | 2.25 | 824.82 | 825.20 | 0.0060620 | 2.72 | 136.13 | 68.08 | 0.61 |
| 14 | 200 | 100 | 1780 | 821.50 | 4.83 | 826.33 | 828.30 | 0.0115850 | 6.27 | 294.73 | 79.03 | 0.96 |
| | | 50 | 1300 | 821.50 | 4.00 | 825.50 | 827.16 | 0.0128050 | 5.72 | 231.77 | 73.36 | 0.98 |
| | | 5 | 530 | 821.50 | 2.40 | 823.90 | 824.86 | 0.0162450 | 4.33 | 122.51 | 63.82 | 1.00 |
| | | 2 | 370 | 821.50 | 2.02 | 823.52 | 824.24 | 0.0156660 | 3.76 | 98.38 | 61.74 | 0.95 |
| 13 | 300 | 100 | 1780 | 820.64 | 3.07 | 823.71 | 826.46 | 0.0295850 | 7.36 | 242.36 | 91.41 | 1.43 |
| | | 50 | 1300 | 820.64 | 2.67 | 823.31 | 825.33 | 0.0267050 | 6.30 | 206.61 | 90.59 | 1.32 |
| | | 5 | 530 | 820.64 | 2.07 | 822.71 | 823.32 | 0.0116900 | 3.47 | 152.57 | 87.12 | 0.84 |
| | | 2 | 370 | 820.64 | 1.70 | 822.34 | 822.81 | 0.0117810 | 3.06 | 120.79 | 83.93 | 0.82 |
| 12 | 400 | 100 | 1780 | 820.00 | 4.61 | 824.55 | 825.34 | 0.0044490 | 3.93 | 454.95 | 106.84 | 0.60 |
| | | 50 | 1300 | 820.00 | 3.64 | 823.58 | 824.27 | 0.0054550 | 3.69 | 352.70 | 103.96 | 0.64 |
| | | 5 | 530 | 820.00 | 2.24 | 822.18 | 822.50 | 0.0050200 | 2.54 | 208.98 | 100.76 | 0.56 |
| | | 2 | 370 | 820.00 | 1.88 | 821.82 | 822.05 | 0.0045190 | 2.14 | 173.13 | 100.00 | 0.52 |
| 11 | 500 | 100 | 1780 | 819.27 | 4.94 | 824.21 | 824.91 | 0.0036920 | 3.70 | 489.00 | 114.82 | 0.55 |
| | | 50 | 1300 | 819.27 | 3.80 | 823.07 | 823.73 | 0.0051930 | 3.62 | 361.36 | 109.13 | 0.62 |
| | | 5 | 530 | 819.27 | 1.85 | 821.12 | 821.71 | 0.0133050 | 3.39 | 156.43 | 102.16 | 0.87 |
| | | 2 | 370 | 819.27 | 1.47 | 820.74 | 821.24 | 0.0165760 | 3.15 | 117.37 | 100.94 | 0.93 |
| 10 | 600 | 100 | 1780 | 816.67 | 5.38 | 822.05 | 824.17 | 0.0108940 | 6.48 | 280.00 | 63.97 | 0.94 |
| | | 50 | 1300 | 816.67 | 4.54 | 821.21 | 822.90 | 0.0111760 | 5.76 | 227.33 | 60.96 | 0.93 |
| | | 5 | 530 | 816.67 | 2.74 | 819.41 | 820.35 | 0.0130850 | 4.29 | 123.44 | 55.00 | 0.91 |
| | | 2 | 370 | 816.67 | 2.22 | 818.89 | 819.66 | 0.0146100 | 3.89 | 95.03 | 53.56 | 0.93 |
| 9 | 700 | 100 | 1780 | 815.26 | 6.22 | 821.48 | 823.14 | 0.0074680 | 5.73 | 316.28 | 66.85 | 0.79 |
| | | 50 | 1300 | 815.26 | 5.30 | 820.56 | 821.87 | 0.0075510 | 5.07 | 257.38 | 61.83 | 0.77 |
| | | 5 | 530 | 815.26 | 3.42 | 818.68 | 819.33 | 0.0070590 | 3.58 | 148.19 | 54.73 | 0.69 |
| | | 2 | 370 | 815.26 | 2.84 | 818.10 | 818.60 | 0.0070040 | 3.16 | 117.18 | 52.07 | 0.67 |
| 8 | 800 | 100 | 1780 | 814.92 | 6.03 | 820.95 | 822.39 | 0.0063400 | 5.32 | 339.46 | 68.06 | 0.73 |
| | | 50 | 1300 | 814.92 | 5.02 | 819.94 | 821.12 | 0.0067910 | 4.80 | 272.48 | 65.14 | 0.73 |
| | | 5 | 530 | 814.92 | 3.04 | 817.96 | 818.60 | 0.0074160 | 3.54 | 149.74 | 57.94 | 0.70 |
| | | 2 | 370 | 814.92 | 2.47 | 817.39 | 817.89 | 0.0072560 | 3.14 | 117.71 | 53.65 | 0.68 |
| 7 | 900 | 100 | 1780 | 814.00 | 5.16 | 819.16 | 821.46 | 0.0117130 | 6.74 | 269.71 | 60.56 | 0.98 |
| | | 50 | 1300 | 814.00 | 4.23 | 818.23 | 820.13 | 0.0127920 | 6.12 | 214.67 | 57.88 | 0.98 |
| | | 5 | 530 | 814.00 | 2.41 | 816.41 | 817.51 | 0.0159140 | 4.64 | 114.20 | 51.89 | 1.00 |
| | | 2 | 370 | 814.00 | 1.90 | 815.90 | 816.79 | 0.0169380 | 4.18 | 88.57 | 49.52 | 1.00 |
| 6 | 1000 | 100 | 1780 | 813.00 | 6.19 | 819.19 | 820.14 | 0.0037110 | 4.35 | 414.71 | 73.62 | 0.57 |
| | | 50 | 1300 | 813.00 | 5.11 | 818.11 | 818.88 | 0.0038630 | 3.88 | 336.70 | 71.64 | 0.56 |
| | | 5 | 530 | 813.00 | 3.00 | 816.00 | 816.40 | 0.0040900 | 2.79 | 190.08 | 67.22 | 0.53 |
| | | 2 | 370 | 813.00 | 2.44 | 815.44 | 815.74 | 0.0040280 | 2.43 | 152.54 | 66.20 | 0.51 |
| 5 | 1100 | 100 | 1780 | 813.00 | 6.21 | 819.21 | 819.75 | 0.0020450 | 3.28 | 553.28 | 98.91 | 0.43 |
| | | 50 | 1300 | 813.00 | 5.04 | 818.04 | 818.49 | 0.0022710 | 2.99 | 439.56 | 95.97 | 0.43 |
| | | 5 | 530 | 813.00 | 2.70 | 815.70 | 815.99 | 0.0034250 | 2.37 | 223.32 | 89.38 | 0.48 |
| | | 2 | 370 | 813.00 | 2.05 | 815.05 | 815.30 | 0.0043990 | 2.24 | 165.39 | 87.67 | 0.52 |
| 4 | 1200 | 100 | 1780 | 812.00 | 6.98 | 818.98 | 819.55 | 0.0019000 | 3.37 | 540.69 | 89.54 | 0.41 |
| | | 50 | 1300 | 812.00 | 5.83 | 817.83 | 818.29 | 0.0019020 | 2.98 | 441.38 | 84.42 | 0.40 |
| | | 5 | 530 | 812.00 | 3.50 | 815.50 | 815.72 | 0.0018690 | 2.09 | 253.87 | 76.61 | 0.37 |
| | | 2 | 370 | 812.00 | 2.84 | 814.84 | 815.01 | 0.0018360 | 1.82 | 203.58 | 75.06 | 0.35 |
| 3 | 1300 | 100 | 1780 | 811.83 | 5.77 | 817.60 | 819.13 | 0.0066410 | 5.50 | 330.69 | 66.27 | 0.75 |
| | | 50 | 1300 | 811.83 | 4.88 | 816.71 | 817.89 | 0.0064690 | 4.82 | 272.85 | 63.70 | 0.72 |
| | | 5 | 530 | 811.83 | 2.94 | 814.77 | 815.37 | 0.0067380 | 3.43 | 154.34 | 58.01 | 0.67 |
| | | 2 | 370 | 811.83 | 2.34 | 814.17 | 814.65 | 0.0071130 | 3.07 | 120.56 | 56.15 | 0.67 |
| 2 | 1400 | 100 | 1780 | 811.00 | 6.32 | 817.32 | 818.48 | 0.0045270 | 4.79 | 381.34 | 77.05 | 0.62 |
| | | 50 | 1300 | 811.00 | 5.42 | 816.42 | 817.28 | 0.0041690 | 4.13 | 318.18 | 67.24 | 0.58 |
| | | 5 | 530 | 811.00 | 3.46 | 814.46 | 814.84 | 0.0033550 | 2.73 | 194.35 | 60.27 | 0.48 |
| | | 2 | 370 | 811.00 | 2.87 | 813.87 | 814.15 | 0.0030620 | 2.32 | 159.19 | 59.00 | 0.45 |
| 1 | 1500 | 100 | 1780 | 811.00 | 5.93 | 816.93 | 818.00 | 0.0045010 | 4.62 | 408.57 | 106.60 | 0.62 |
| | | 50 | 1300 | 811.00 | 5.00 | 816.00 | 816.85 | 0.0045020 | 4.10 | 323.16 | 78.61 | 0.60 |
| | | 5 | 530 | 811.00 | 3.02 | 814.02 | 814.45 | 0.0045070 | 2.90 | 182.66 | 65.65 | 0.56 |
| | | 2 | 370 | 811.00 | 2.44 | 813.44 | 813.77 | 0.0045000 | 2.54 | 145.39 | 63.86 | 0.54 |

Table 5. Hydraulic Axis Situation with Project ($n_{main\ flow}$ = 0.045)

| PROFILE | x | T | Total Q | bottom Z | H | EH ELEVATION | POWER C. | J | $V_{C.MAIN}$ | A | A. SUP | Froude N° |
|---|---|---|---|---|---|---|---|---|---|---|---|---|
| | | years | (m3/s) | (m) | (m) | (m) | (m) | (m/m) | (m/s) | ($m^2$) | (m) | |
| 16 | 0 | 100 | 1780 | 823.39 | 4.94 | 828.33 | 829.97 | 0.008947 | 5.69 | 316.43 | 73.09 | 0.86 |
| | | 50 | 1300 | 823.39 | 4.16 | 827.55 | 828.83 | 0.008925 | 5.02 | 260.44 | 71.26 | 0.83 |
| | | 5 | 530 | 823.39 | 2.55 | 825.94 | 826.58 | 0.009161 | 3.57 | 148.51 | 66.87 | 0.76 |
| | | 2 | 370 | 823.39 | 2.08 | 825.47 | 825.97 | 0.009347 | 3.14 | 117.81 | 65.49 | 0.75 |
| 15 | 100 | 100 | 1780 | 822.57 | 5.33 | 827.90 | 829.11 | 0.006083 | 4.90 | 369.51 | 83.34 | 0.73 |
| | | 50 | 1300 | 822.57 | 4.44 | 827.01 | 827.99 | 0.006419 | 4.40 | 297.31 | 79.14 | 0.72 |
| | | 5 | 530 | 822.57 | 2.64 | 825.21 | 825.75 | 0.007080 | 3.25 | 163.21 | 70.04 | 0.68 |
| | | 2 | 370 | 822.57 | 2.15 | 824.72 | 825.14 | 0.007109 | 2.86 | 129.44 | 67.68 | 0.66 |
| 14 | 200 | 100 | 1780 | 821.50 | 5.58 | 827.08 | 828.46 | 0.006610 | 5.27 | 356.42 | 84.36 | 0.78 |
| | | 50 | 1300 | 821.50 | 4.63 | 826.13 | 827.29 | 0.007255 | 4.81 | 279.35 | 77.70 | 0.78 |
| | | 5 | 530 | 821.50 | 2.80 | 824.30 | 824.95 | 0.008752 | 3.57 | 148.44 | 66.01 | 0.76 |
| | | 2 | 370 | 821.50 | 2.31 | 823.81 | 824.32 | 0.009135 | 3.16 | 116.99 | 63.35 | 0.74 |
| 13 | 300 | 100 | 1780 | 820.64 | 5.92 | 826.56 | 827.84 | 0.005316 | 5.07 | 360.56 | 72.21 | 0.71 |
| | | 50 | 1300 | 820.64 | 4.95 | 825.59 | 826.62 | 0.005539 | 4.55 | 291.48 | 69.55 | 0.70 |
| | | 5 | 530 | 820.64 | 3.00 | 823.64 | 824.20 | 0.006118 | 3.31 | 161.31 | 64.32 | 0.66 |
| | | 2 | 370 | 820.64 | 2.47 | 823.11 | 823.54 | 0.006384 | 2.91 | 127.63 | 62.66 | 0.65 |
| 12 | 400 | 100 | 1780 | 820.00 | 5.74 | 825.74 | 827.22 | 0.006302 | 5.46 | 333.53 | 67.49 | 0.77 |
| | | 50 | 1300 | 820.00 | 4.89 | 824.89 | 826.03 | 0.006016 | 4.77 | 277.11 | 65.03 | 0.73 |
| | | 5 | 530 | 820.00 | 3.09 | 823.09 | 823.62 | 0.005298 | 3.23 | 164.73 | 60.07 | 0.62 |
| | | 2 | 370 | 820.00 | 2.57 | 822.57 | 822.96 | 0.005014 | 2.77 | 134.16 | 58.56 | 0.58 |
| 11 | 500 | 100 | 1780 | 819.27 | 4.99 | 824.26 | 826.34 | 0.011227 | 6.46 | 282.53 | 68.51 | 0.99 |
| | | 50 | 1300 | 819.27 | 4.15 | 823.42 | 825.14 | 0.012089 | 5.86 | 225.87 | 66.18 | 1.00 |
| | | 5 | 530 | 819.27 | 2.47 | 821.74 | 822.73 | 0.015236 | 4.43 | 119.97 | 59.80 | 1.00 |
| | | 2 | 370 | 819.27 | 2.02 | 821.29 | 822.09 | 0.016529 | 3.96 | 93.66 | 58.27 | 1.00 |
| 10 | 600 | 100 | 1780 | 816.67 | 4.29 | 820.96 | 824.58 | 0.024796 | 8.48 | 211.92 | 59.06 | 1.42 |
| | | 50 | 1300 | 816.67 | 3.55 | 820.22 | 823.25 | 0.027698 | 7.76 | 168.66 | 57.19 | 1.43 |
| | | 5 | 530 | 816.67 | 2.16 | 818.83 | 820.53 | 0.032041 | 5.79 | 91.99 | 53.39 | 1.40 |
| | | 2 | 370 | 816.67 | 1.81 | 818.48 | 819.78 | 0.032490 | 5.07 | 73.20 | 52.16 | 1.36 |
| 9 | 700 | 100 | 1780 | 815.26 | 6.22 | 821.48 | 823.14 | 0.007468 | 5.73 | 316.28 | 66.85 | 0.83 |
| | | 50 | 1300 | 815.26 | 5.30 | 820.56 | 821.87 | 0.007551 | 5.07 | 257.38 | 61.83 | 0.79 |
| | | 5 | 530 | 815.26 | 3.42 | 818.68 | 819.33 | 0.007059 | 3.58 | 148.19 | 54.73 | 0.69 |
| | | 2 | 370 | 815.26 | 2.84 | 818.10 | 818.60 | 0.007004 | 3.16 | 117.18 | 52.07 | 0.67 |
| 8 | 800 | 100 | 1780 | 814.92 | 6.03 | 820.95 | 822.39 | 0.006340 | 5.32 | 339.46 | 68.06 | 0.75 |
| | | 50 | 1300 | 814.92 | 5.02 | 819.94 | 821.12 | 0.006791 | 4.80 | 272.48 | 65.14 | 0.75 |
| | | 5 | 530 | 814.92 | 3.04 | 817.96 | 818.60 | 0.007416 | 3.54 | 149.74 | 57.94 | 0.70 |
| | | 2 | 370 | 814.92 | 2.47 | 817.39 | 817.89 | 0.007256 | 3.14 | 117.71 | 53.65 | 0.68 |
| 7 | 900 | 100 | 1780 | 814.00 | 5.16 | 819.16 | 821.46 | 0.011713 | 6.74 | 269.71 | 60.56 | 1.00 |
| | | 50 | 1300 | 814.00 | 4.23 | 818.23 | 820.13 | 0.012792 | 6.12 | 214.67 | 57.88 | 1.00 |
| | | 5 | 530 | 814.00 | 2.41 | 816.41 | 817.51 | 0.015914 | 4.64 | 114.20 | 51.89 | 1.00 |
| | | 2 | 370 | 814.00 | 1.90 | 815.90 | 816.79 | 0.016938 | 4.18 | 88.57 | 49.52 | 1.00 |
| 6 | 1000 | 100 | 1780 | 813.00 | 6.19 | 819.19 | 820.14 | 0.003711 | 4.35 | 414.71 | 73.62 | 0.58 |
| | | 50 | 1300 | 813.00 | 5.11 | 818.11 | 818.88 | 0.003863 | 3.88 | 336.70 | 71.64 | 0.57 |
| | | 5 | 530 | 813.00 | 3.00 | 816.00 | 816.40 | 0.004090 | 2.79 | 190.08 | 67.22 | 0.53 |
| | | 2 | 370 | 813.00 | 2.44 | 815.44 | 815.74 | 0.004028 | 2.43 | 152.54 | 66.20 | 0.51 |
| 5 | 1100 | 100 | 1780 | 813.00 | 6.21 | 819.21 | 819.75 | 0.002045 | 3.28 | 553.28 | 98.91 | 0.43 |
| | | 50 | 1300 | 813.00 | 5.04 | 818.04 | 818.49 | 0.002271 | 2.99 | 439.56 | 95.97 | 0.44 |
| | | 5 | 530 | 813.00 | 2.70 | 815.70 | 815.99 | 0.003425 | 2.37 | 223.32 | 89.38 | 0.48 |
| | | 2 | 370 | 813.00 | 2.05 | 815.05 | 815.30 | 0.004399 | 2.24 | 165.39 | 87.67 | 0.52 |
| 4 | 1200 | 100 | 1780 | 812.00 | 6.98 | 818.98 | 819.55 | 0.001900 | 3.37 | 540.69 | 89.54 | 0.43 |
| | | 50 | 1300 | 812.00 | 5.83 | 817.83 | 818.29 | 0.001902 | 2.98 | 441.38 | 84.42 | 0.41 |
| | | 5 | 530 | 812.00 | 3.50 | 815.50 | 815.72 | 0.001869 | 2.09 | 253.87 | 76.61 | 0.37 |
| | | 2 | 370 | 812.00 | 2.84 | 814.84 | 815.01 | 0.001836 | 1.82 | 203.58 | 75.06 | 0.35 |
| 3 | 1300 | 100 | 1780 | 811.83 | 5.77 | 817.60 | 819.13 | 0.006641 | 5.50 | 330.69 | 66.27 | 0.77 |
| | | 50 | 1300 | 811.83 | 4.88 | 816.71 | 817.89 | 0.006469 | 4.82 | 272.85 | 63.70 | 0.74 |
| | | 5 | 530 | 811.83 | 2.94 | 814.77 | 815.37 | 0.006738 | 3.43 | 154.34 | 58.01 | 0.67 |
| | | 2 | 370 | 811.83 | 2.34 | 814.17 | 814.65 | 0.007112 | 3.07 | 120.57 | 56.15 | 0.67 |
| 2 | 1400 | 100 | 1780 | 811.00 | 6.32 | 817.32 | 818.48 | 0.004527 | 4.79 | 381.34 | 77.05 | 0.67 |
| | | 50 | 1300 | 811.00 | 5.42 | 816.42 | 817.28 | 0.004169 | 4.13 | 318.18 | 67.24 | 0.60 |
| | | 5 | 530 | 811.00 | 3.46 | 814.46 | 814.84 | 0.003355 | 2.73 | 194.35 | 60.27 | 0.49 |
| | | 2 | 370 | 811.00 | 2.87 | 813.87 | 814.15 | 0.003061 | 2.32 | 159.19 | 59.00 | 0.45 |
| 1 | 1500 | 100 | 1780 | 811.00 | 5.93 | 816.93 | 818.00 | 0.004501 | 4.62 | 408.57 | 106.60 | 0.71 |
| | | 50 | 1300 | 811.00 | 5.00 | 816.00 | 816.85 | 0.004502 | 4.10 | 323.16 | 78.61 | 0.63 |
| | | 5 | 530 | 811.00 | 3.02 | 814.02 | 814.45 | 0.004507 | 2.90 | 182.66 | 65.65 | 0.56 |
| | | 2 | 370 | 811.00 | 2.44 | 813.44 | 813.77 | 0.004500 | 2.54 | 145.39 | 63.86 | 0.54 |

Table 6. Current Situation Hydraulic Axis ($n_{main\ flow}$ = 0.040)

| PROFILE | x | T | Total Q | bottom Z | H | EH ELEVATION | POWER C. | J | $V_{C.MAIN}$ | A | A. SUP | Froude N° |
|---|---|---|---|---|---|---|---|---|---|---|---|---|
| | | years | (m3/s) | (m) | (m) | (m) | (m) | (m/m) | (m/s) | ($m^2$) | (m) | |
| 16 | 0 | 100 | 1780 | 823.39 | 4.63 | 828.02 | 829.92 | 0.0089710 | 6.12 | 293.80 | 72.40 | 0.95 |
| | | 50 | 1300 | 823.39 | 3.91 | 827.30 | 828.77 | 0.0088880 | 5.38 | 242.51 | 70.71 | 0.91 |
| | | 5 | 530 | 823.39 | 2.37 | 825.76 | 826.52 | 0.0093780 | 3.87 | 136.89 | 66.34 | 0.86 |
| | | 2 | 370 | 823.39 | 1.93 | 825.32 | 825.92 | 0.0097870 | 3.43 | 107.92 | 65.06 | 0.85 |
| 15 | 100 | 100 | 1780 | 822.57 | 5.20 | 827.77 | 829.06 | 0.0052520 | 5.04 | 359.24 | 82.78 | 0.74 |
| | | 50 | 1300 | 822.57 | 4.36 | 826.93 | 827.96 | 0.0054240 | 4.49 | 291.14 | 78.72 | 0.73 |
| | | 5 | 530 | 822.57 | 2.61 | 825.18 | 825.73 | 0.0058610 | 3.30 | 160.76 | 69.86 | 0.69 |
| | | 2 | 370 | 822.57 | 2.13 | 824.70 | 825.12 | 0.0058450 | 2.89 | 127.81 | 67.59 | 0.67 |
| 14 | 200 | 100 | 1780 | 821.50 | 4.82 | 826.32 | 828.31 | 0.0092070 | 6.28 | 294.55 | 79.02 | 0.97 |
| | | 50 | 1300 | 821.50 | 3.98 | 825.48 | 827.16 | 0.0103650 | 5.76 | 230.08 | 73.22 | 0.99 |
| | | 5 | 530 | 821.50 | 2.40 | 823.90 | 824.86 | 0.0128360 | 4.33 | 122.51 | 63.82 | 1.00 |
| | | 2 | 370 | 821.50 | 1.97 | 823.47 | 824.24 | 0.0136330 | 3.88 | 95.39 | 61.48 | 0.99 |
| 13 | 300 | 100 | 1780 | 820.64 | 2.89 | 823.53 | 826.68 | 0.0290950 | 7.86 | 226.78 | 91.01 | 1.58 |
| | | 50 | 1300 | 820.64 | 2.50 | 823.14 | 825.50 | 0.0273980 | 6.81 | 190.93 | 90.19 | 1.49 |
| | | 5 | 530 | 820.64 | 1.70 | 822.34 | 823.31 | 0.0188130 | 4.37 | 121.38 | 83.99 | 1.16 |
| | | 2 | 370 | 820.64 | 1.54 | 822.18 | 822.78 | 0.0131970 | 3.42 | 108.10 | 82.70 | 0.96 |
| 12 | 400 | 100 | 1780 | 820.00 | 4.43 | 824.37 | 825.23 | 0.0040540 | 4.11 | 435.43 | 106.18 | 0.64 |
| | | 50 | 1300 | 820.00 | 3.45 | 823.39 | 824.17 | 0.0051920 | 3.90 | 333.36 | 103.55 | 0.69 |
| | | 5 | 530 | 820.00 | 2.16 | 822.10 | 822.45 | 0.0044730 | 2.63 | 201.42 | 100.60 | 0.59 |
| | | 2 | 370 | 820.00 | 1.79 | 821.73 | 821.99 | 0.0042210 | 2.25 | 164.49 | 99.82 | 0.56 |
| 11 | 500 | 100 | 1780 | 819.27 | 4.83 | 824.10 | 824.83 | 0.0031810 | 3.80 | 476.07 | 113.03 | 0.57 |
| | | 50 | 1300 | 819.27 | 3.67 | 822.94 | 823.66 | 0.0046410 | 3.76 | 347.91 | 108.64 | 0.66 |
| | | 5 | 530 | 819.27 | 1.72 | 820.99 | 821.69 | 0.0139240 | 3.69 | 143.50 | 101.73 | 0.99 |
| | | 2 | 370 | 819.27 | 1.42 | 820.69 | 821.24 | 0.0150190 | 3.29 | 112.57 | 100.79 | 0.99 |
| 10 | 600 | 100 | 1780 | 816.67 | 5.27 | 821.94 | 824.17 | 0.0093420 | 6.64 | 272.83 | 63.54 | 0.98 |
| | | 50 | 1300 | 816.67 | 4.37 | 821.04 | 822.89 | 0.0102240 | 6.03 | 217.14 | 60.28 | 0.99 |
| | | 5 | 530 | 816.67 | 2.62 | 819.29 | 820.34 | 0.0123960 | 4.55 | 116.57 | 54.69 | 0.99 |
| | | 2 | 370 | 816.67 | 2.05 | 818.72 | 819.66 | 0.0157640 | 4.30 | 86.14 | 53.01 | 1.08 |
| 9 | 700 | 100 | 1780 | 815.26 | 5.15 | 820.41 | 823.05 | 0.0126080 | 7.20 | 247.91 | 61.08 | 1.12 |
| | | 50 | 1300 | 815.26 | 4.99 | 820.25 | 821.77 | 0.0076040 | 5.46 | 238.62 | 60.32 | 0.86 |
| | | 5 | 530 | 815.26 | 3.21 | 818.47 | 819.23 | 0.0070790 | 3.86 | 137.13 | 54.00 | 0.77 |
| | | 2 | 370 | 815.26 | 2.67 | 817.93 | 818.52 | 0.0069750 | 3.41 | 108.51 | 51.16 | 0.75 |
| 8 | 800 | 100 | 1780 | 814.92 | 5.75 | 820.67 | 822.28 | 0.0060110 | 5.63 | 320.42 | 67.13 | 0.80 |
| | | 50 | 1300 | 814.92 | 4.75 | 819.67 | 821.01 | 0.0066540 | 5.12 | 254.88 | 64.32 | 0.81 |
| | | 5 | 530 | 814.92 | 2.82 | 817.74 | 818.50 | 0.0075820 | 3.87 | 136.93 | 56.26 | 0.79 |
| | | 2 | 370 | 814.92 | 2.28 | 817.20 | 817.80 | 0.0074590 | 3.44 | 107.57 | 52.23 | 0.76 |
| 7 | 900 | 100 | 1780 | 814.00 | 5.15 | 819.15 | 821.47 | 0.0093280 | 6.76 | 269.20 | 60.54 | 0.98 |
| | | 50 | 1300 | 814.00 | 4.22 | 818.22 | 820.14 | 0.0101770 | 6.13 | 214.27 | 57.86 | 0.99 |
| | | 5 | 530 | 814.00 | 2.41 | 816.41 | 817.51 | 0.0125740 | 4.64 | 114.20 | 51.89 | 1.00 |
| | | 2 | 370 | 814.00 | 1.90 | 815.90 | 816.79 | 0.0133830 | 4.18 | 88.57 | 49.52 | 1.00 |
| 6 | 1000 | 100 | 1780 | 813.00 | 5.91 | 818.91 | 819.97 | 0.0034370 | 4.56 | 394.66 | 73.07 | 0.61 |
| | | 50 | 1300 | 813.00 | 4.85 | 817.85 | 818.71 | 0.0036740 | 4.11 | 317.98 | 71.09 | 0.61 |
| | | 5 | 530 | 813.00 | 2.82 | 815.82 | 816.27 | 0.0040150 | 2.98 | 177.57 | 66.89 | 0.58 |
| | | 2 | 370 | 813.00 | 2.29 | 815.29 | 815.63 | 0.0039310 | 2.59 | 142.82 | 65.91 | 0.56 |
| 5 | 1100 | 100 | 1780 | 813.00 | 6.00 | 819.00 | 819.58 | 0.0018260 | 3.40 | 532.56 | 98.44 | 0.45 |
| | | 50 | 1300 | 813.00 | 4.83 | 817.83 | 818.33 | 0.0020850 | 3.12 | 419.54 | 95.36 | 0.47 |
| | | 5 | 530 | 813.00 | 2.53 | 815.53 | 815.86 | 0.0034000 | 2.55 | 207.98 | 88.87 | 0.53 |
| | | 2 | 370 | 813.00 | 1.90 | 814.90 | 815.20 | 0.0045360 | 2.43 | 152.19 | 87.03 | 0.59 |
| 4 | 1200 | 100 | 1780 | 812.00 | 6.80 | 818.80 | 819.41 | 0.0016470 | 3.47 | 524.87 | 88.87 | 0.43 |
| | | 50 | 1300 | 812.00 | 5.65 | 817.65 | 818.14 | 0.0016790 | 3.08 | 426.22 | 83.77 | 0.42 |
| | | 5 | 530 | 812.00 | 3.36 | 815.36 | 815.60 | 0.0016940 | 2.18 | 243.11 | 76.29 | 0.39 |
| | | 2 | 370 | 812.00 | 2.72 | 814.72 | 814.91 | 0.0016710 | 1.90 | 194.77 | 74.79 | 0.38 |
| 3 | 1300 | 100 | 1780 | 811.83 | 5.32 | 817.15 | 818.99 | 0.0070330 | 6.01 | 301.19 | 64.97 | 0.86 |
| | | 50 | 1300 | 811.83 | 4.50 | 816.33 | 817.74 | 0.0068530 | 5.27 | 248.81 | 62.62 | 0.82 |
| | | 5 | 530 | 811.83 | 2.69 | 814.52 | 815.25 | 0.0071690 | 3.78 | 140.29 | 57.25 | 0.77 |
| | | 2 | 370 | 811.83 | 2.14 | 813.97 | 814.55 | 0.0076960 | 3.39 | 109.13 | 55.50 | 0.77 |
| 2 | 1400 | 100 | 1780 | 811.00 | 5.97 | 816.97 | 818.28 | 0.0043880 | 5.10 | 355.64 | 69.88 | 0.68 |
| | | 50 | 1300 | 811.00 | 5.11 | 816.11 | 817.10 | 0.0040520 | 4.39 | 297.87 | 65.72 | 0.64 |
| | | 5 | 530 | 811.00 | 3.27 | 814.27 | 814.70 | 0.0031990 | 2.90 | 183.07 | 59.91 | 0.53 |
| | | 2 | 370 | 811.00 | 2.72 | 813.72 | 814.03 | 0.0029070 | 2.46 | 150.12 | 58.56 | 0.49 |
| 1 | 1500 | 100 | 1780 | 811.00 | 5.57 | 816.57 | 817.82 | 0.0045070 | 4.98 | 372.51 | 94.46 | 0.69 |
| | | 50 | 1300 | 811.00 | 4.68 | 815.68 | 816.67 | 0.0045000 | 4.40 | 299.01 | 75.98 | 0.67 |
| | | 5 | 530 | 811.00 | 2.82 | 813.82 | 814.31 | 0.0045020 | 3.13 | 169.55 | 65.10 | 0.62 |
| | | 2 | 370 | 811.00 | 2.28 | 813.28 | 813.66 | 0.0045060 | 2.74 | 134.89 | 63.31 | 0.60 |

Table 7. Hydraulic Axis Situation with Project ($n_{main\ flow}$ = 0.040)

| PROFILE | x | T | Total Q | bottom Z | H | EH ELEVATION | POWER C. | J | $V_{C.MAIN}$ | A | A. SUP | Froude N° |
|---|---|---|---|---|---|---|---|---|---|---|---|---|
| | | years | (m3/s) | (m) | (m) | (m) | (m) | (m/m) | (m/s) | ($m^2$) | (m) | |
| 16 | 0 | 100 | 1780 | 823.39 | 4.57 | 827.96 | 829.91 | 0.009422 | 6.21 | 289.34 | 72.20 | 0.98 |
| | | 50 | 1300 | 823.39 | 3.86 | 827.25 | 828.77 | 0.009293 | 5.45 | 239.21 | 70.61 | 0.94 |
| | | 5 | 530 | 823.39 | 2.36 | 825.75 | 826.52 | 0.009479 | 3.88 | 136.43 | 66.32 | 0.87 |
| | | 2 | 370 | 823.39 | 1.94 | 825.33 | 825.92 | 0.009676 | 3.42 | 108.31 | 65.08 | 0.85 |
| 15 | 100 | 100 | 1780 | 822.57 | 5.08 | 827.65 | 829.01 | 0.005728 | 5.17 | 349.36 | 82.23 | 0.79 |
| | | 50 | 1300 | 822.57 | 4.23 | 826.80 | 827.90 | 0.006059 | 4.64 | 281.22 | 78.08 | 0.78 |
| | | 5 | 530 | 822.57 | 2.51 | 825.08 | 825.68 | 0.006723 | 3.45 | 153.76 | 69.32 | 0.74 |
| | | 2 | 370 | 822.57 | 2.04 | 824.61 | 825.08 | 0.006829 | 3.04 | 121.69 | 67.22 | 0.72 |
| 14 | 200 | 100 | 1780 | 821.50 | 5.25 | 826.75 | 828.37 | 0.006643 | 5.68 | 328.95 | 81.87 | 0.86 |
| | | 50 | 1300 | 821.50 | 4.33 | 825.83 | 827.20 | 0.007478 | 5.22 | 256.03 | 75.53 | 0.88 |
| | | 5 | 530 | 821.50 | 2.62 | 824.12 | 824.89 | 0.009087 | 3.88 | 136.55 | 65.02 | 0.86 |
| | | 2 | 370 | 821.50 | 2.16 | 823.66 | 824.27 | 0.009379 | 3.44 | 107.53 | 62.54 | 0.84 |
| 13 | 300 | 100 | 1780 | 820.64 | 5.67 | 826.31 | 827.74 | 0.005029 | 5.37 | 342.15 | 71.51 | 0.76 |
| | | 50 | 1300 | 820.64 | 4.69 | 825.33 | 826.51 | 0.005420 | 4.87 | 273.57 | 68.87 | 0.76 |
| | | 5 | 530 | 820.64 | 2.83 | 823.47 | 824.11 | 0.006176 | 3.57 | 149.93 | 63.81 | 0.74 |
| | | 2 | 370 | 820.64 | 2.32 | 822.96 | 823.46 | 0.006523 | 3.15 | 118.02 | 61.72 | 0.72 |
| 12 | 400 | 100 | 1780 | 820.00 | 5.45 | 825.45 | 827.13 | 0.006100 | 5.83 | 314.09 | 66.64 | 0.83 |
| | | 50 | 1300 | 820.00 | 4.65 | 824.65 | 825.93 | 0.005772 | 5.07 | 261.68 | 64.37 | 0.79 |
| | | 5 | 530 | 820.00 | 2.93 | 822.93 | 823.53 | 0.005121 | 3.44 | 155.25 | 59.62 | 0.68 |
| | | 2 | 370 | 820.00 | 2.44 | 822.44 | 822.88 | 0.004863 | 2.96 | 126.08 | 58.15 | 0.64 |
| 11 | 500 | 100 | 1780 | 819.27 | 4.99 | 824.26 | 826.36 | 0.008978 | 6.51 | 282.86 | 68.52 | 0.99 |
| | | 50 | 1300 | 819.27 | 4.15 | 823.42 | 825.15 | 0.009680 | 5.90 | 225.83 | 66.18 | 1.00 |
| | | 5 | 530 | 819.27 | 2.47 | 821.74 | 822.74 | 0.012135 | 4.45 | 119.97 | 59.80 | 1.00 |
| | | 2 | 370 | 819.27 | 2.02 | 821.29 | 822.09 | 0.013140 | 3.97 | 93.69 | 58.27 | 0.99 |
| 10 | 600 | 100 | 1780 | 816.67 | 4.12 | 820.79 | 824.80 | 0.023213 | 8.95 | 201.62 | 58.57 | 1.52 |
| | | 50 | 1300 | 816.67 | 3.38 | 820.05 | 823.47 | 0.026647 | 8.25 | 159.14 | 56.81 | 1.56 |
| | | 5 | 530 | 816.67 | 2.01 | 818.68 | 820.73 | 0.034173 | 6.36 | 83.85 | 52.86 | 1.60 |
| | | 2 | 370 | 816.67 | 1.66 | 818.33 | 819.95 | 0.036446 | 5.66 | 65.72 | 51.66 | 1.59 |
| 9 | 700 | 100 | 1780 | 815.26 | 5.85 | 821.11 | 823.04 | 0.007527 | 6.17 | 292.14 | 64.60 | 0.92 |
| | | 50 | 1300 | 815.26 | 4.99 | 820.25 | 821.77 | 0.007604 | 5.46 | 238.62 | 60.32 | 0.87 |
| | | 5 | 530 | 815.26 | 3.21 | 818.47 | 819.23 | 0.007079 | 3.86 | 137.13 | 54.00 | 0.77 |
| | | 2 | 370 | 815.26 | 2.67 | 817.93 | 818.52 | 0.006975 | 3.41 | 108.51 | 51.16 | 0.75 |
| 8 | 800 | 100 | 1780 | 814.92 | 5.75 | 820.67 | 822.28 | 0.006011 | 5.63 | 320.42 | 67.13 | 0.81 |
| | | 50 | 1300 | 814.92 | 4.75 | 819.67 | 821.01 | 0.006654 | 5.12 | 254.88 | 64.32 | 0.82 |
| | | 5 | 530 | 814.92 | 2.82 | 817.74 | 818.50 | 0.007582 | 3.87 | 136.93 | 56.26 | 0.79 |
| | | 2 | 370 | 814.92 | 2.28 | 817.20 | 817.80 | 0.007459 | 3.44 | 107.57 | 52.23 | 0.77 |
| 7 | 900 | 100 | 1780 | 814.00 | 5.15 | 819.15 | 821.47 | 0.009328 | 6.76 | 269.20 | 60.54 | 1.00 |
| | | 50 | 1300 | 814.00 | 4.22 | 818.22 | 820.14 | 0.010177 | 6.13 | 214.27 | 57.86 | 1.01 |
| | | 5 | 530 | 814.00 | 2.41 | 816.41 | 817.51 | 0.012574 | 4.64 | 114.20 | 51.89 | 1.00 |
| | | 2 | 370 | 814.00 | 1.90 | 815.90 | 816.79 | 0.013383 | 4.18 | 88.57 | 49.52 | 1.00 |
| 6 | 1000 | 100 | 1780 | 813.00 | 5.91 | 818.91 | 819.97 | 0.003437 | 4.56 | 394.66 | 73.07 | 0.62 |
| | | 50 | 1300 | 813.00 | 4.85 | 817.85 | 818.71 | 0.003674 | 4.11 | 317.98 | 71.09 | 0.62 |
| | | 5 | 530 | 813.00 | 2.82 | 815.82 | 816.27 | 0.004015 | 2.98 | 177.57 | 66.89 | 0.59 |
| | | 2 | 370 | 813.00 | 2.29 | 815.29 | 815.63 | 0.003931 | 2.59 | 142.82 | 65.91 | 0.56 |
| 5 | 1100 | 100 | 1780 | 813.00 | 6.00 | 819.00 | 819.58 | 0.001826 | 3.40 | 532.56 | 98.44 | 0.46 |
| | | 50 | 1300 | 813.00 | 4.83 | 817.83 | 818.33 | 0.002085 | 3.12 | 419.54 | 95.36 | 0.47 |
| | | 5 | 530 | 813.00 | 2.53 | 815.53 | 815.86 | 0.003400 | 2.55 | 207.98 | 88.87 | 0.53 |
| | | 2 | 370 | 813.00 | 1.90 | 814.90 | 815.20 | 0.004536 | 2.43 | 152.19 | 87.03 | 0.59 |
| 4 | 1200 | 100 | 1780 | 812.00 | 6.80 | 818.80 | 819.41 | 0.001647 | 3.47 | 524.87 | 88.87 | 0.45 |
| | | 50 | 1300 | 812.00 | 5.65 | 817.65 | 818.14 | 0.001679 | 3.08 | 426.22 | 83.77 | 0.43 |
| | | 5 | 530 | 812.00 | 3.36 | 815.36 | 815.60 | 0.001694 | 2.18 | 243.11 | 76.29 | 0.39 |
| | | 2 | 370 | 812.00 | 2.72 | 814.72 | 814.91 | 0.001671 | 1.90 | 194.77 | 74.79 | 0.38 |
| 3 | 1300 | 100 | 1780 | 811.83 | 5.32 | 817.15 | 818.99 | 0.007033 | 6.01 | 301.19 | 64.97 | 0.88 |
| | | 50 | 1300 | 811.83 | 4.50 | 816.33 | 817.74 | 0.006853 | 5.27 | 248.81 | 62.62 | 0.84 |
| | | 5 | 530 | 811.83 | 2.69 | 814.52 | 815.25 | 0.007169 | 3.78 | 140.29 | 57.25 | 0.77 |
| | | 2 | 370 | 811.83 | 2.14 | 813.97 | 814.55 | 0.007696 | 3.39 | 109.13 | 55.50 | 0.77 |
| 2 | 1400 | 100 | 1780 | 811.00 | 5.97 | 816.97 | 818.28 | 0.004388 | 5.10 | 355.64 | 69.88 | 0.71 |
| | | 50 | 1300 | 811.00 | 5.11 | 816.11 | 817.10 | 0.004052 | 4.39 | 297.87 | 65.72 | 0.65 |
| | | 5 | 530 | 811.00 | 3.27 | 814.27 | 814.70 | 0.003199 | 2.90 | 183.07 | 59.91 | 0.53 |
| | | 2 | 370 | 811.00 | 2.72 | 813.72 | 814.03 | 0.002907 | 2.46 | 150.12 | 58.56 | 0.49 |
| 1 | 1500 | 100 | 1780 | 811.00 | 5.57 | 816.57 | 817.82 | 0.004507 | 4.98 | 372.51 | 94.46 | 0.77 |
| | | 50 | 1300 | 811.00 | 4.68 | 815.68 | 816.67 | 0.004500 | 4.40 | 299.01 | 75.98 | 0.70 |
| | | 5 | 530 | 811.00 | 2.82 | 813.82 | 814.31 | 0.004502 | 3.13 | 169.55 | 65.10 | 0.62 |
| | | 2 | 370 | 811.00 | 2.28 | 813.28 | 813.66 | 0.004506 | 2.74 | 134.89 | 63.31 | 0.60 |

# ANNEX 1

## MAIPO RIVER TRANSVERSAL PROFILES

## DISCHARGE ZONE LAS LAJAS POWER

## PLANT SITUATION WITHOUT PROJECT
## ($n_{Main\ Flow}$ = 0.045)

PROFILE N° 1

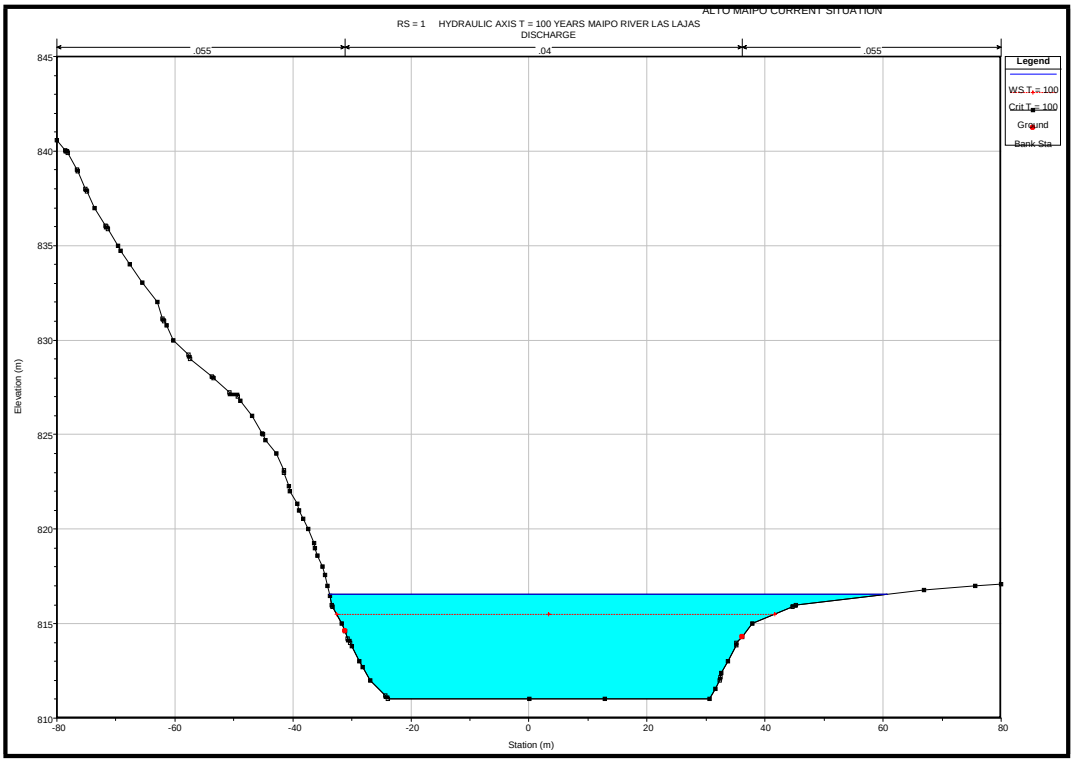


PROFILE N° 2

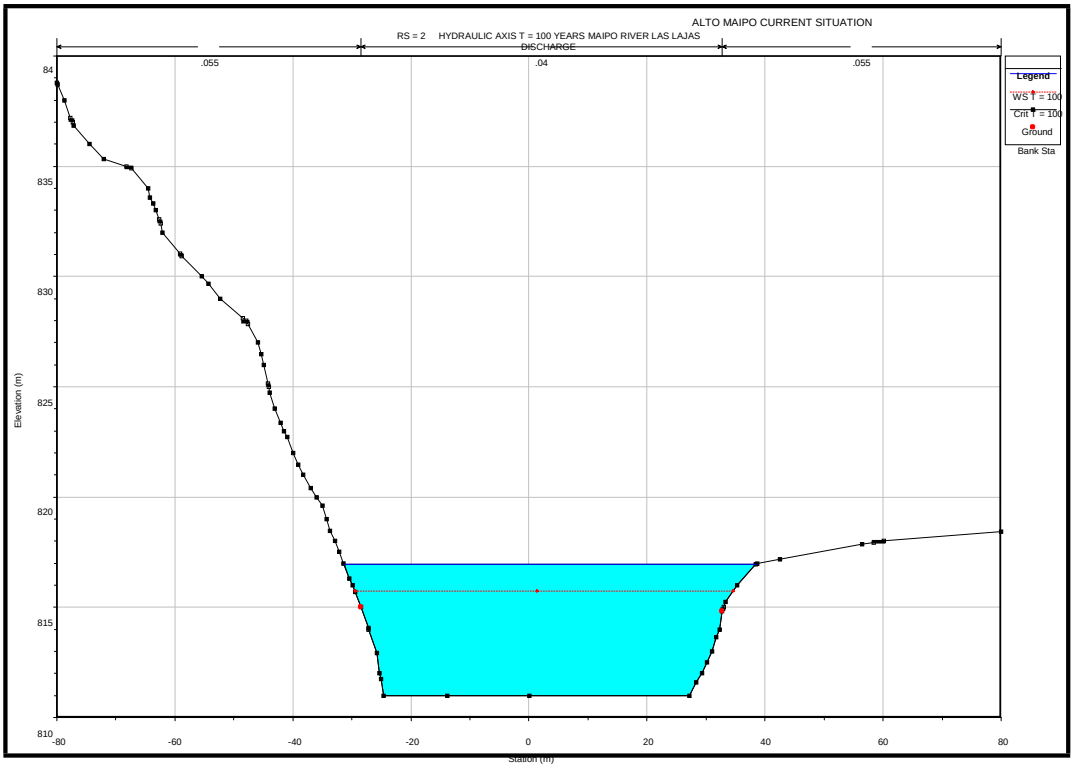

PROFILE N° 3

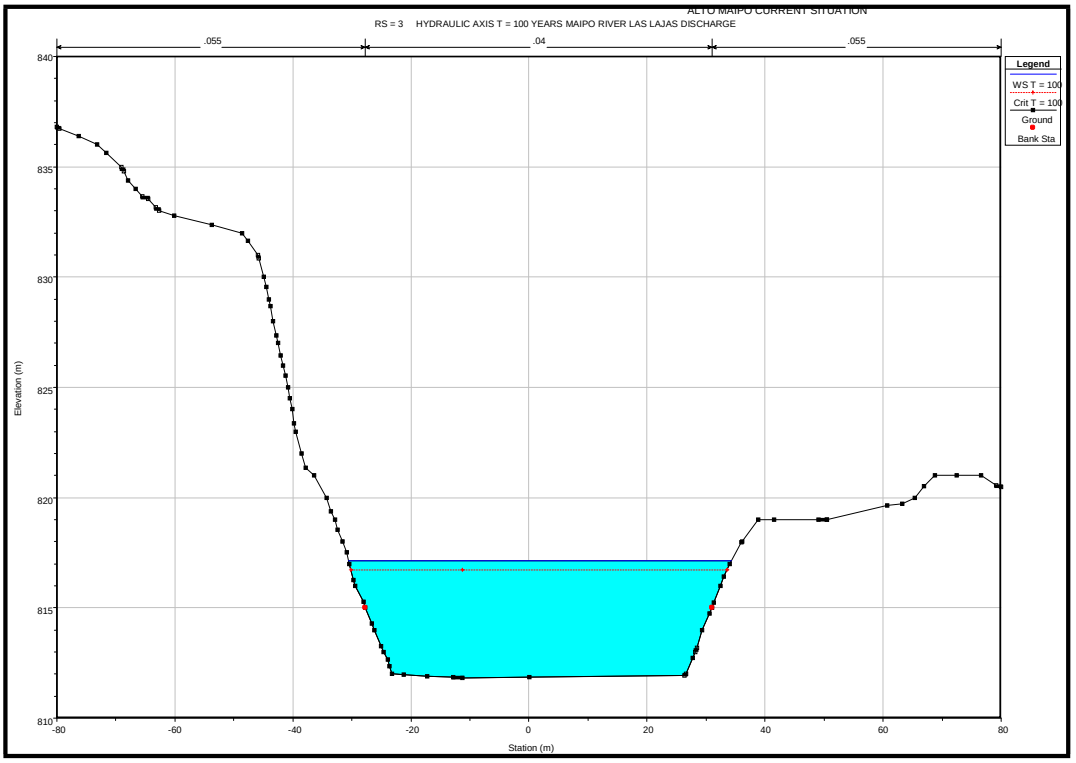


PROFILE N° 4

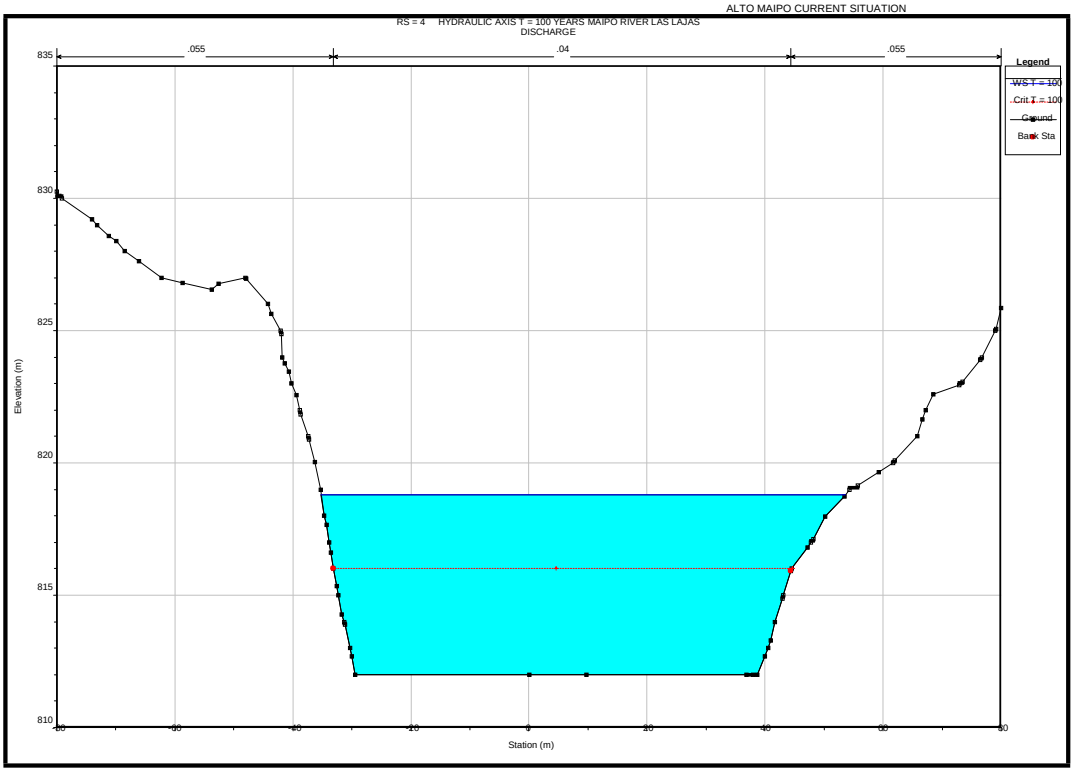

PROFILE N° 5

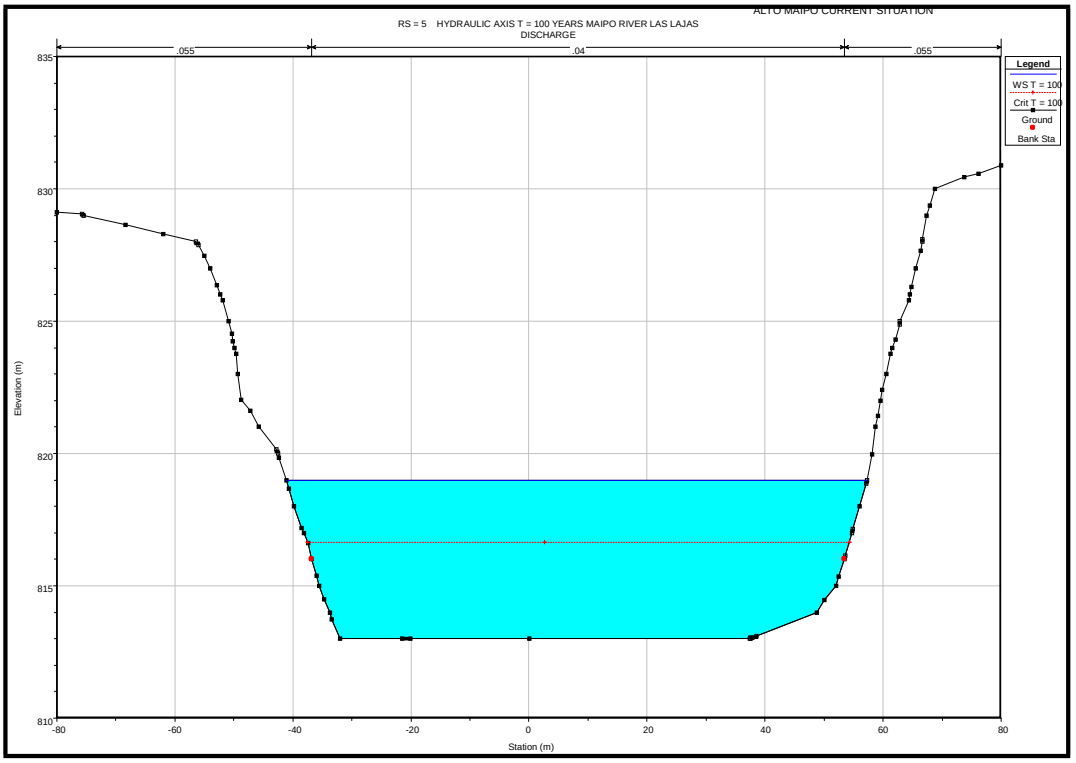


PROFILE N°
6

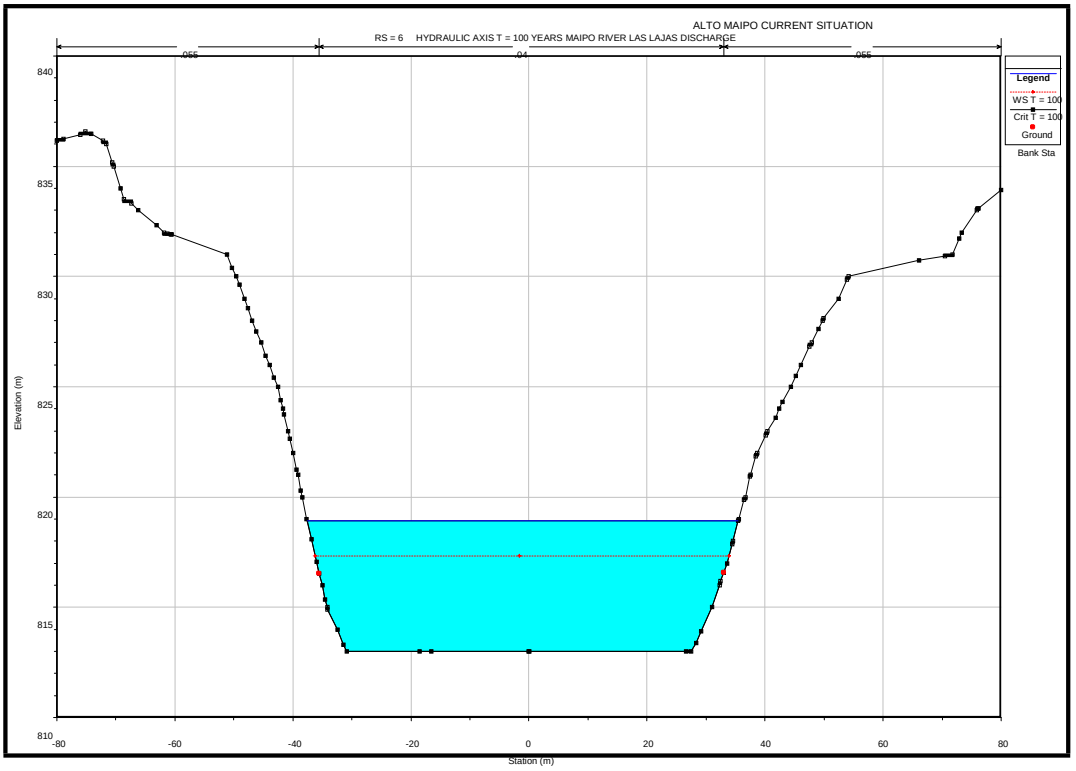

PROFILE N° 7

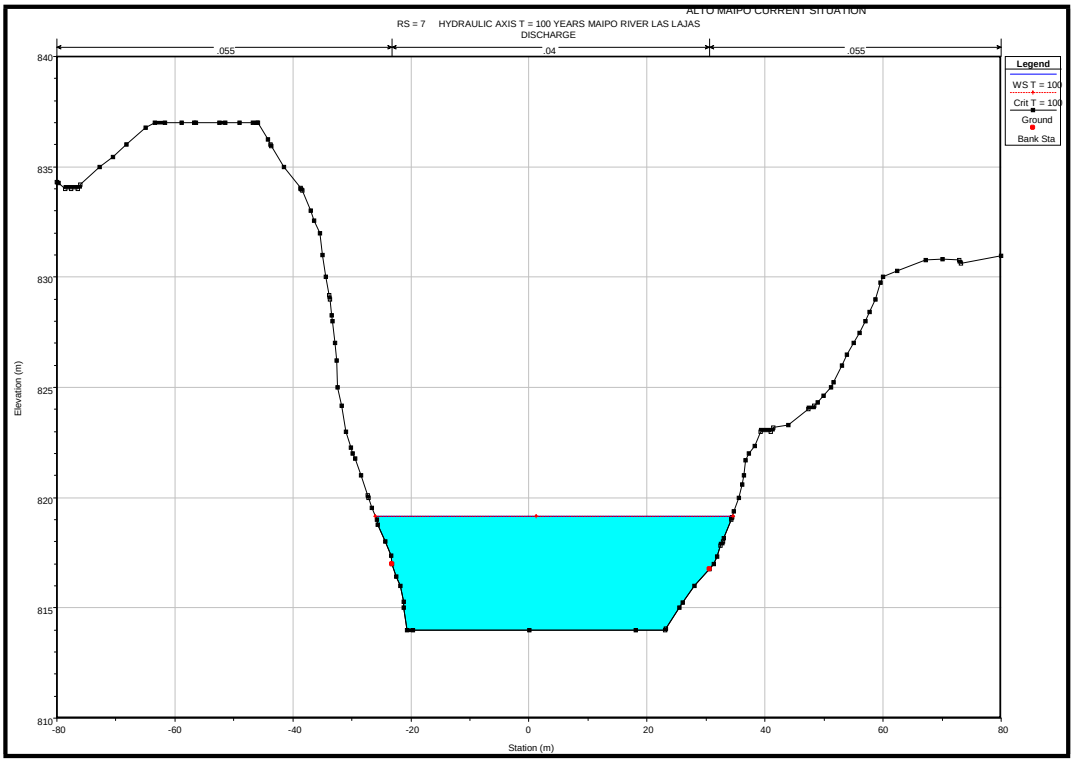


PROFILE N°
8

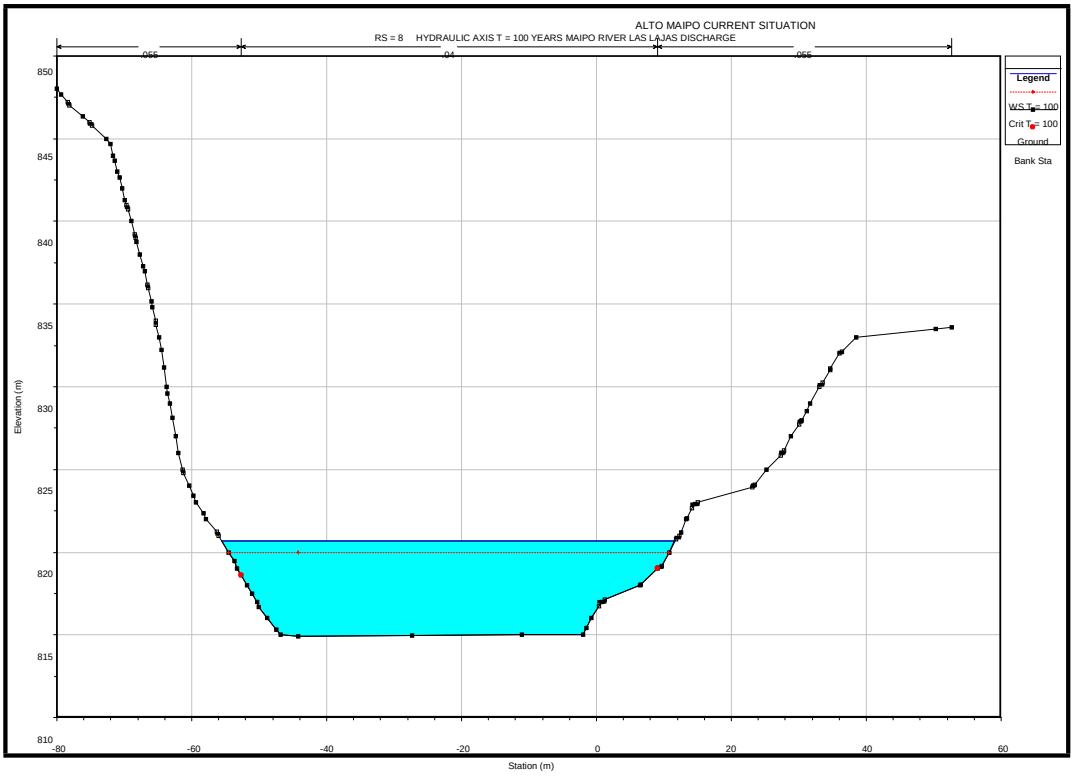

PROFILE N° 9

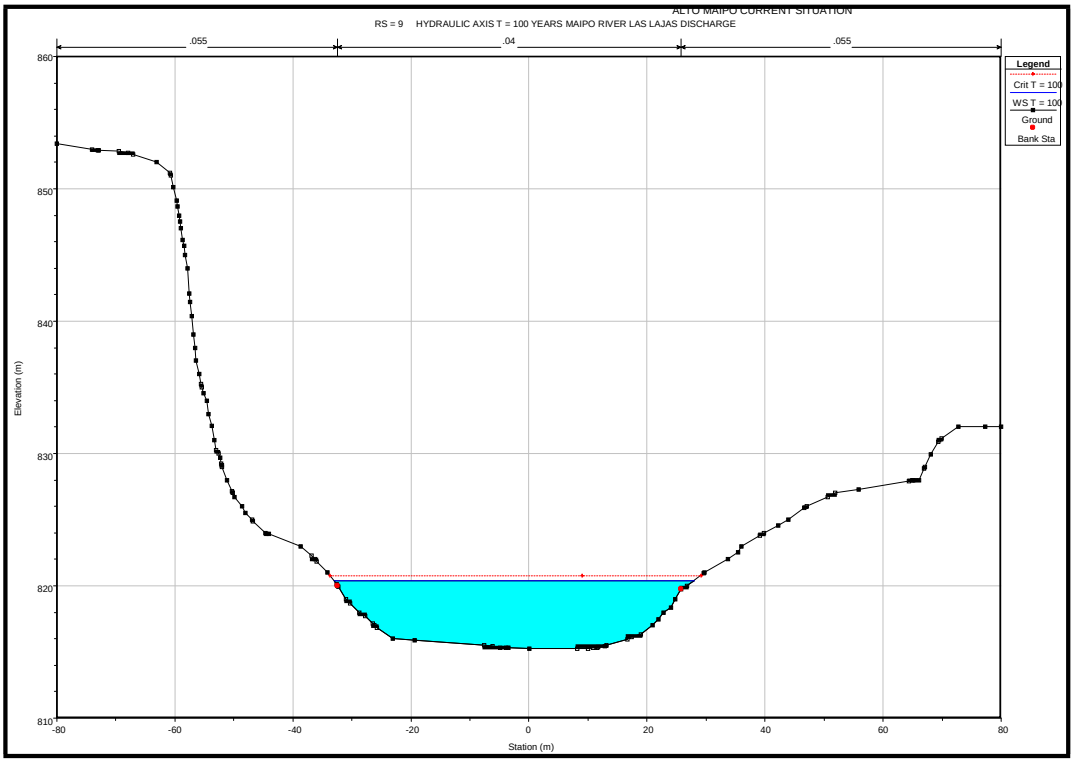


PROFILE N° 10

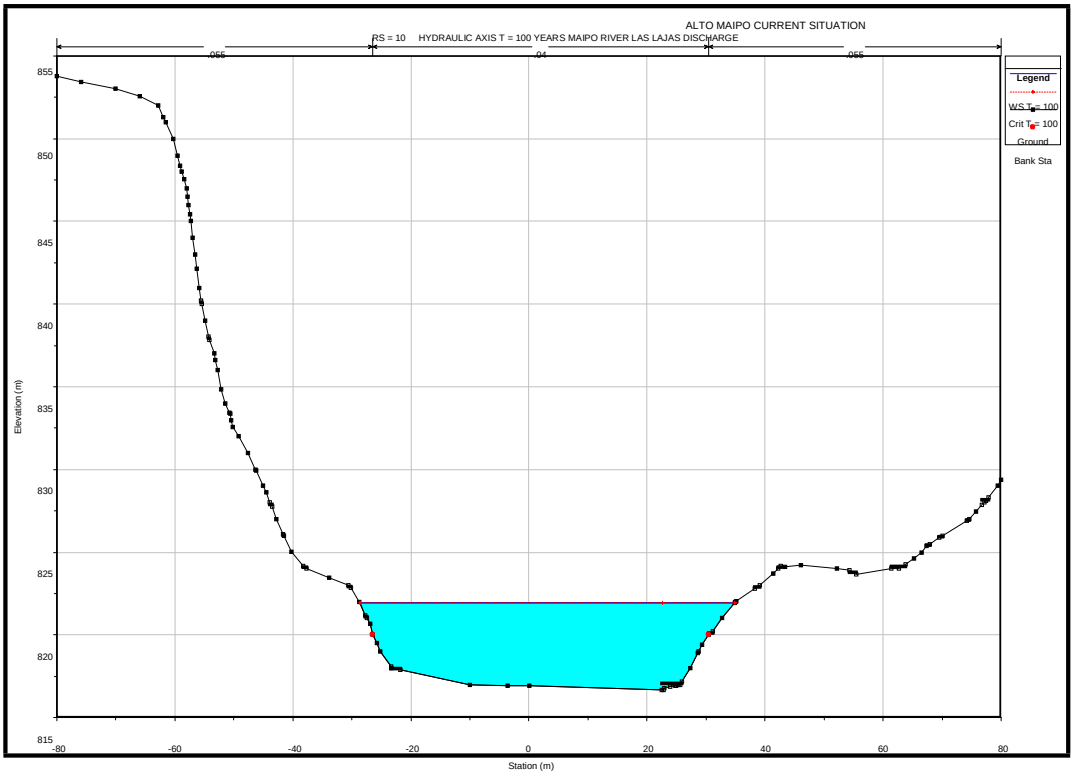

PROFILE N° 11

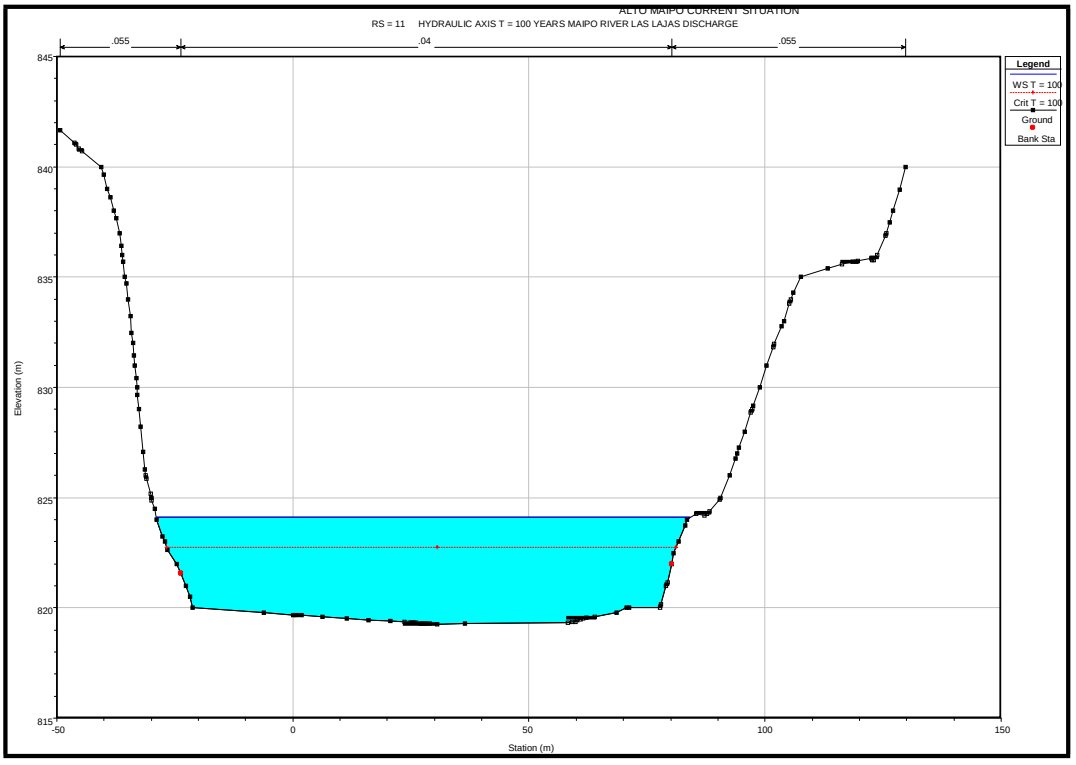


PROFILE N° 12

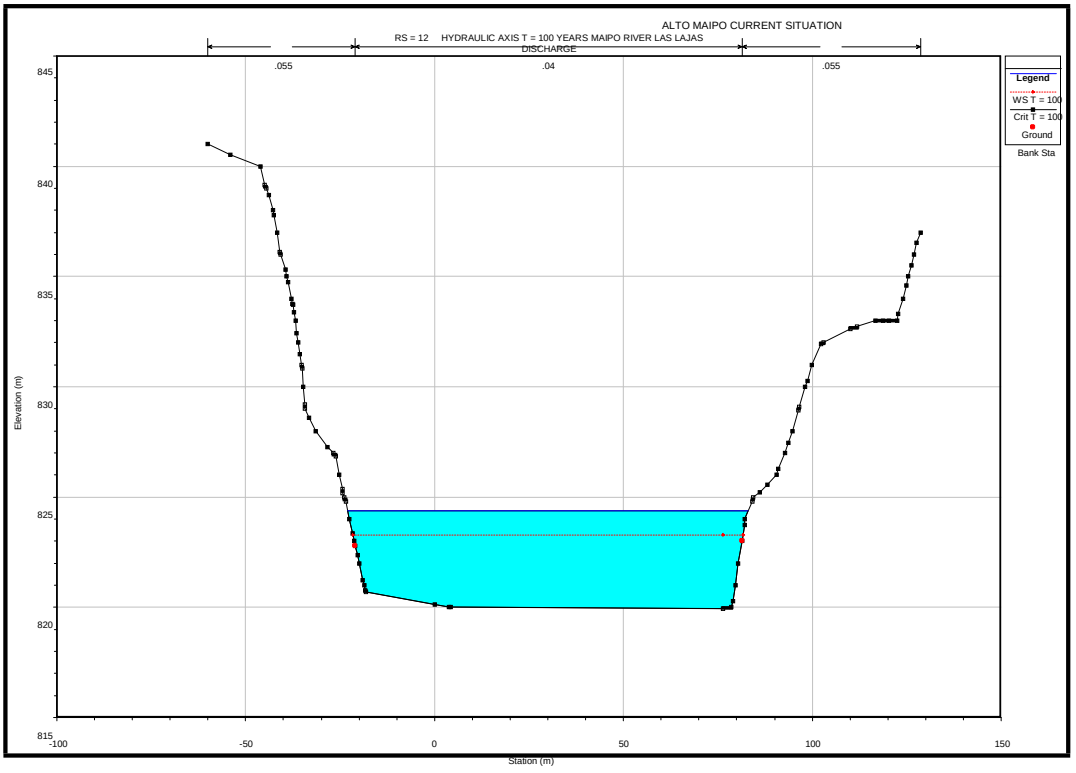

PROFILE N° 13

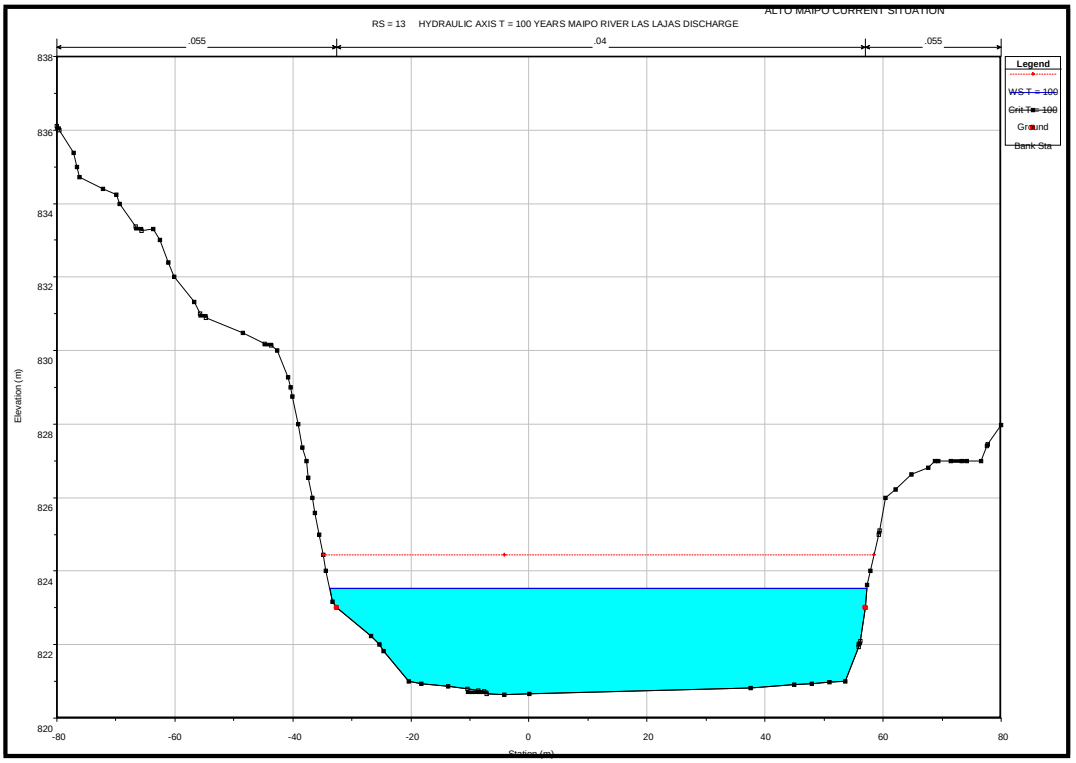


PROFILE N° 14

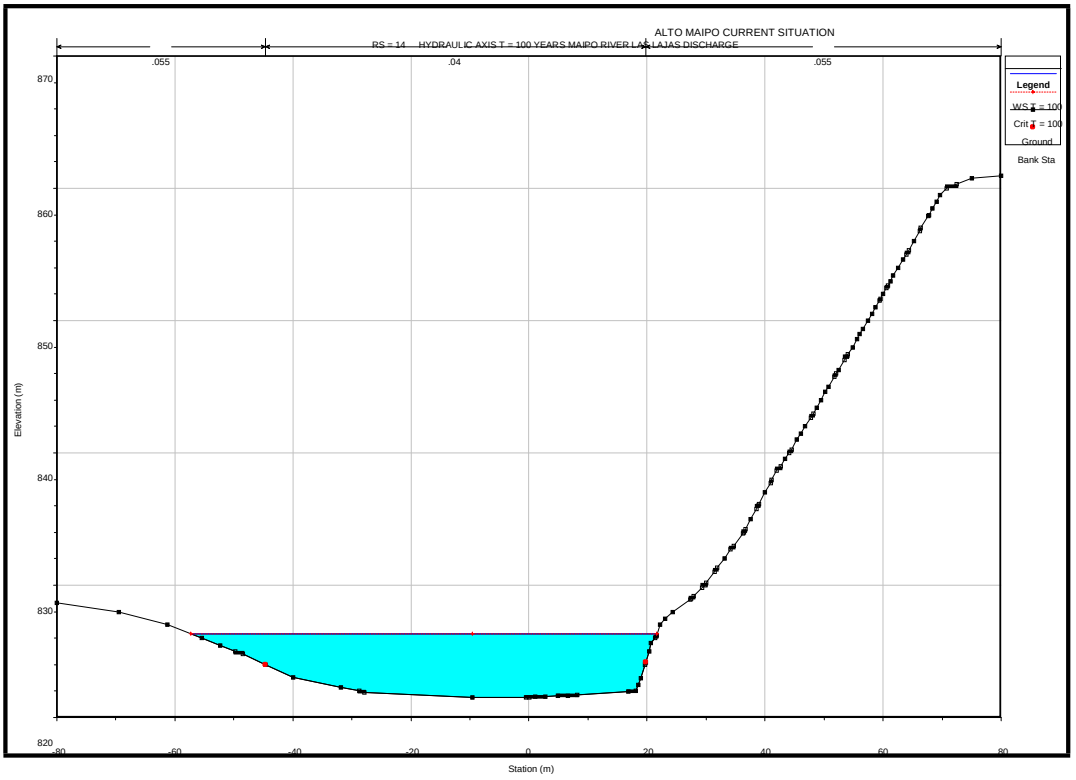

PROFILE N° 15

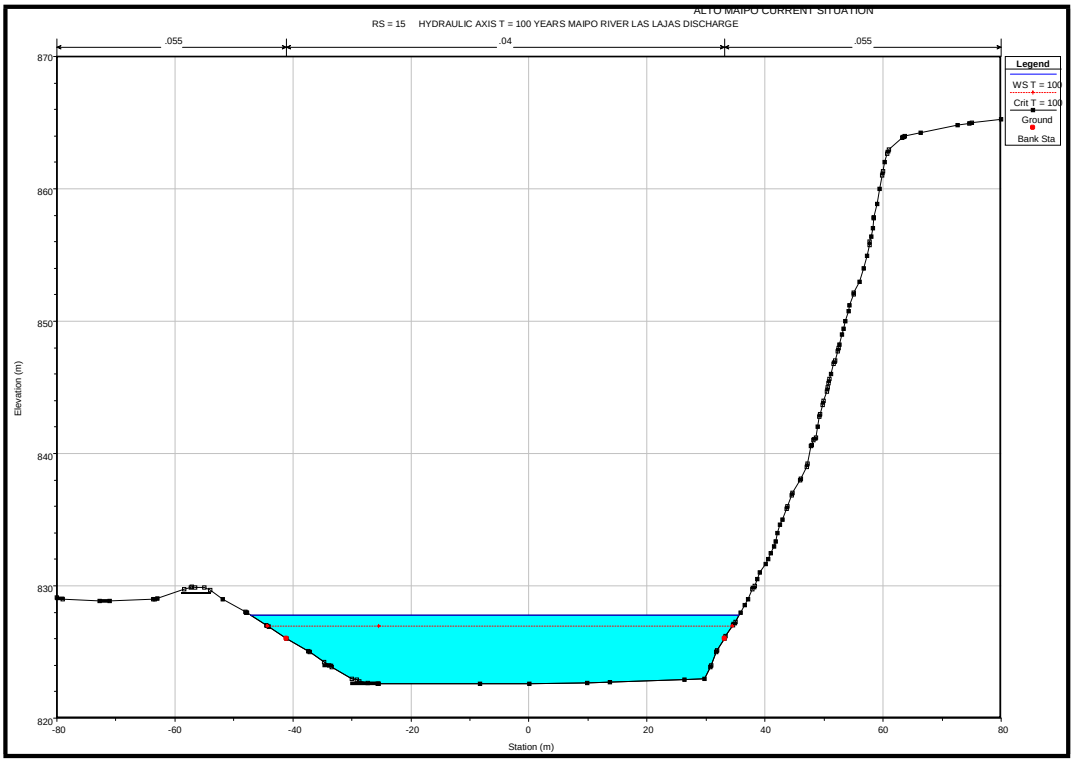


PROFILE N° 16

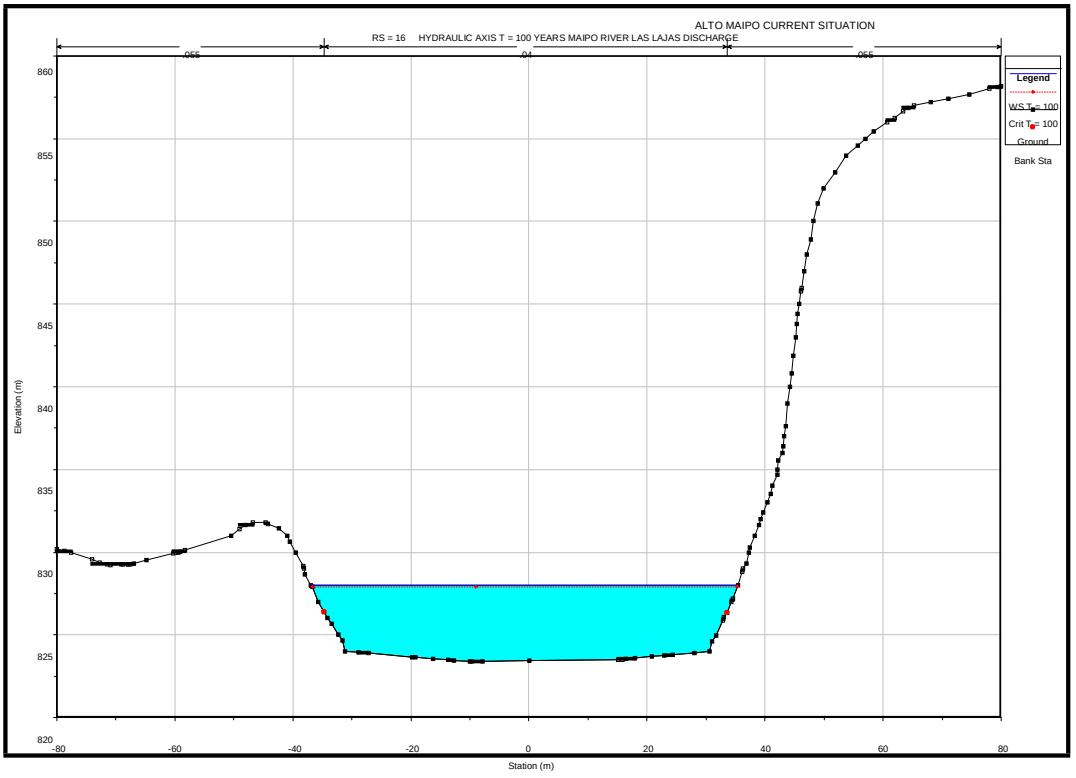

# ANNEX 2

# MAIPO RIVER TRANSVERSAL PROFILES

# DISCHARGE ZONE LAS LAJAS POWER

# PLANT SITUATION WITH PROJECT
# ($n_{Main\ Flow}$ = 0,045)

PROFILE N° 1

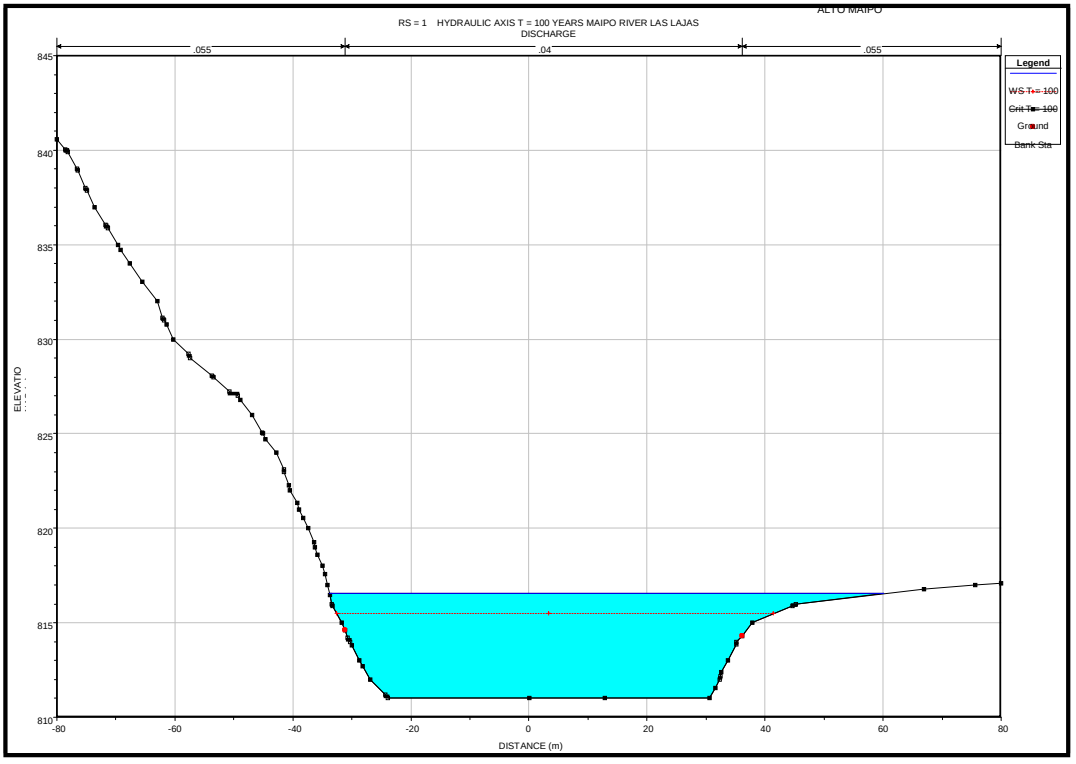


PROFILE N° 2

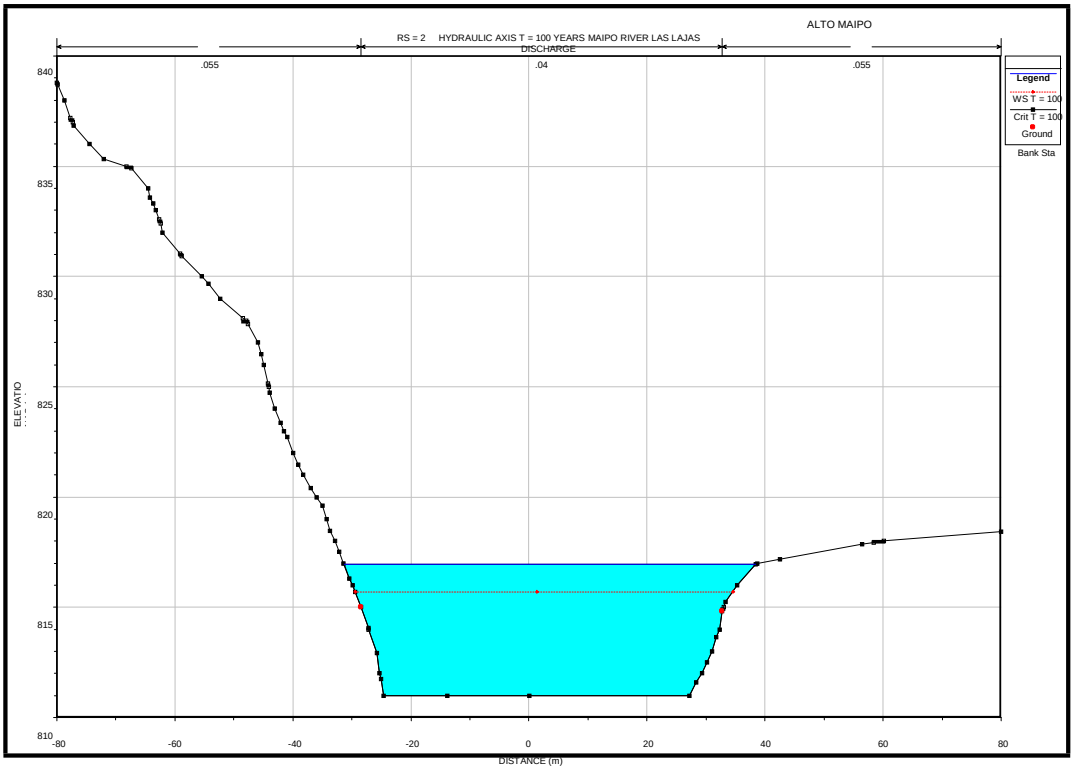

PROFILE N° 3

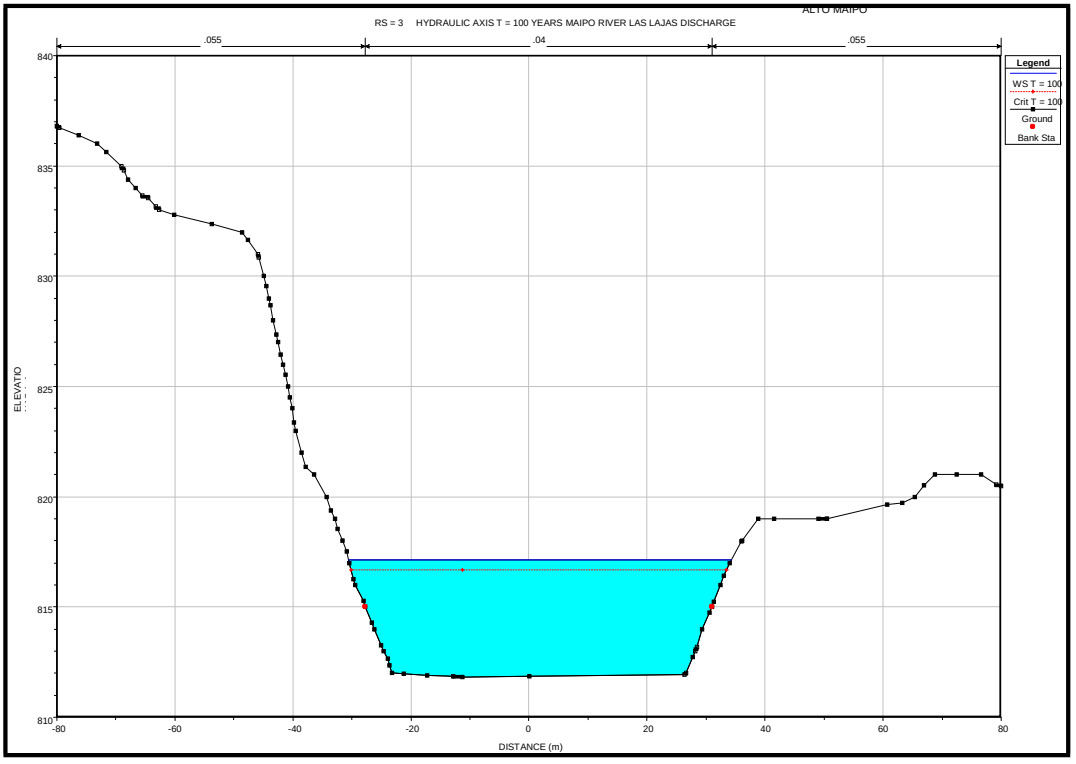


PROFILE N° 4

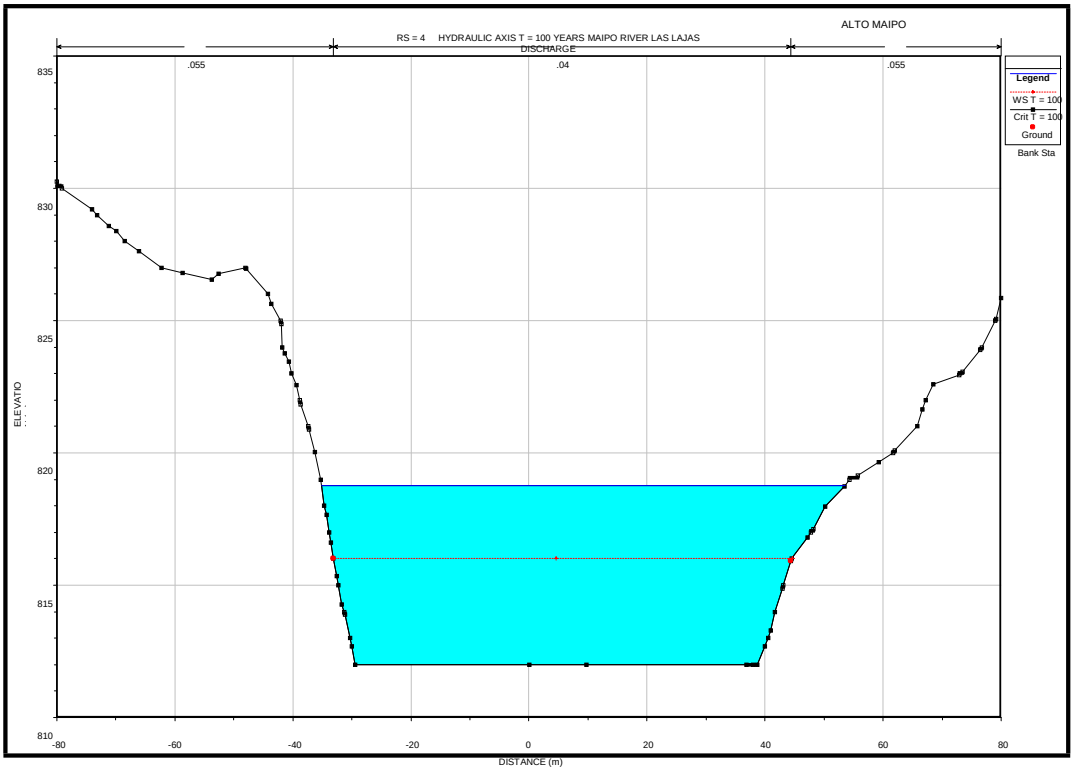

PROFILE N° 5

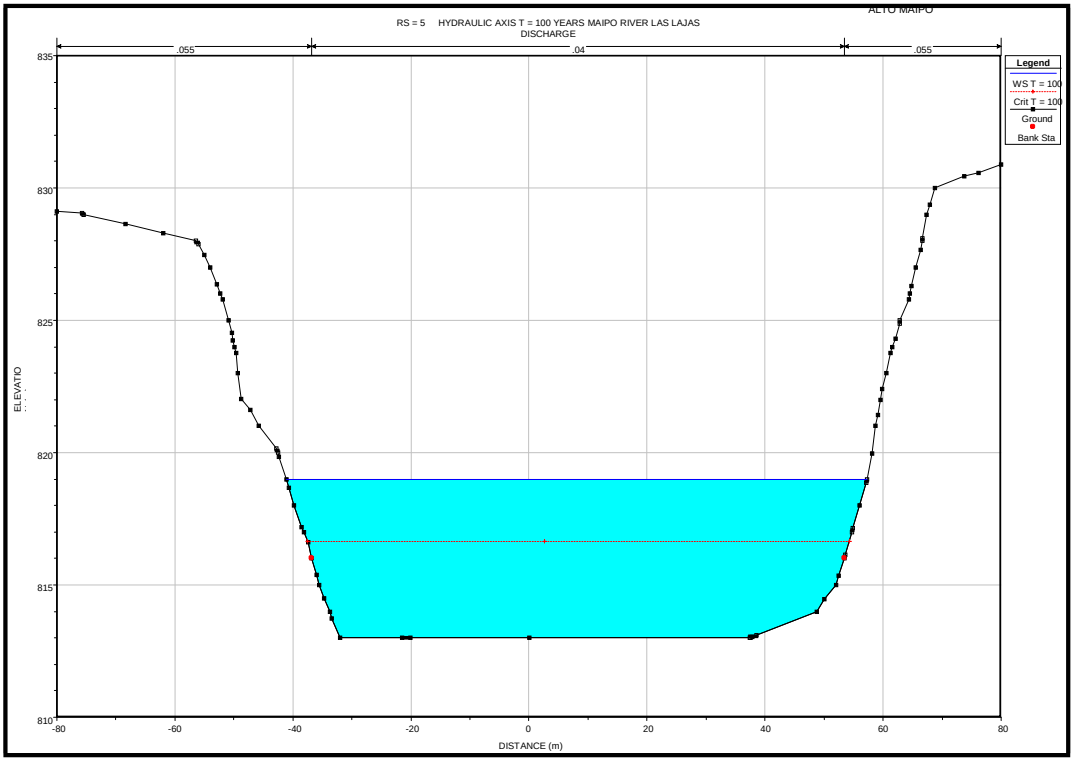


PROFILE N°
6

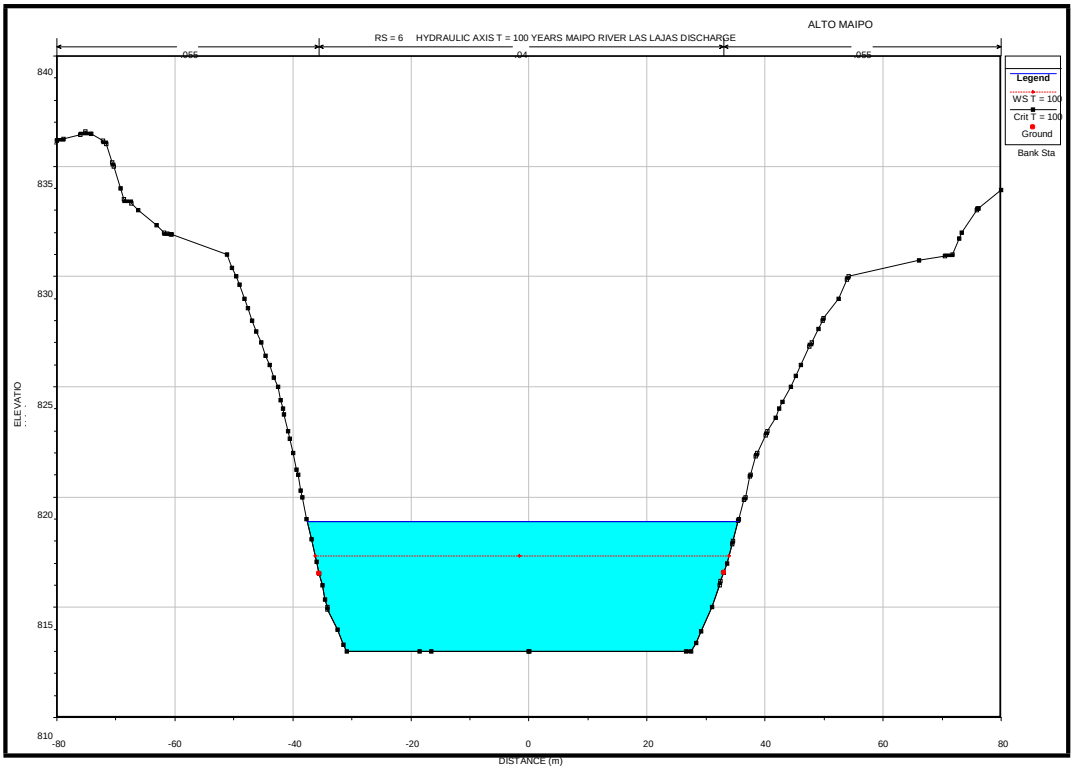

PROFILE N° 7

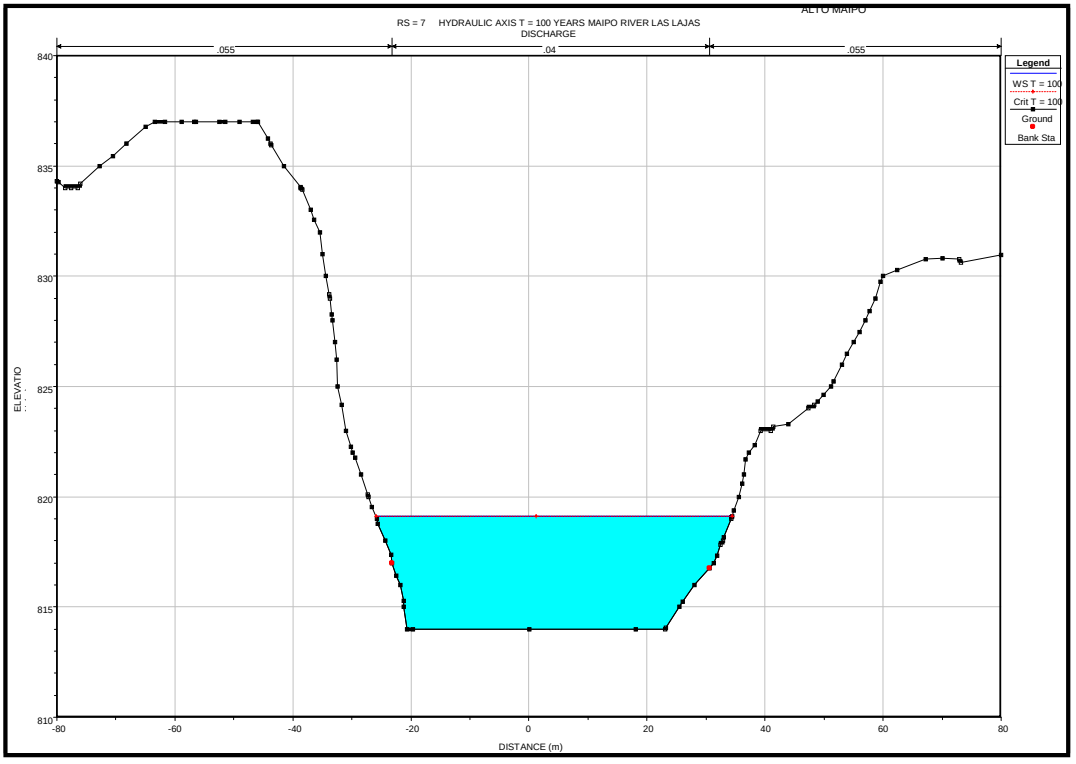


PROFILE N°
8

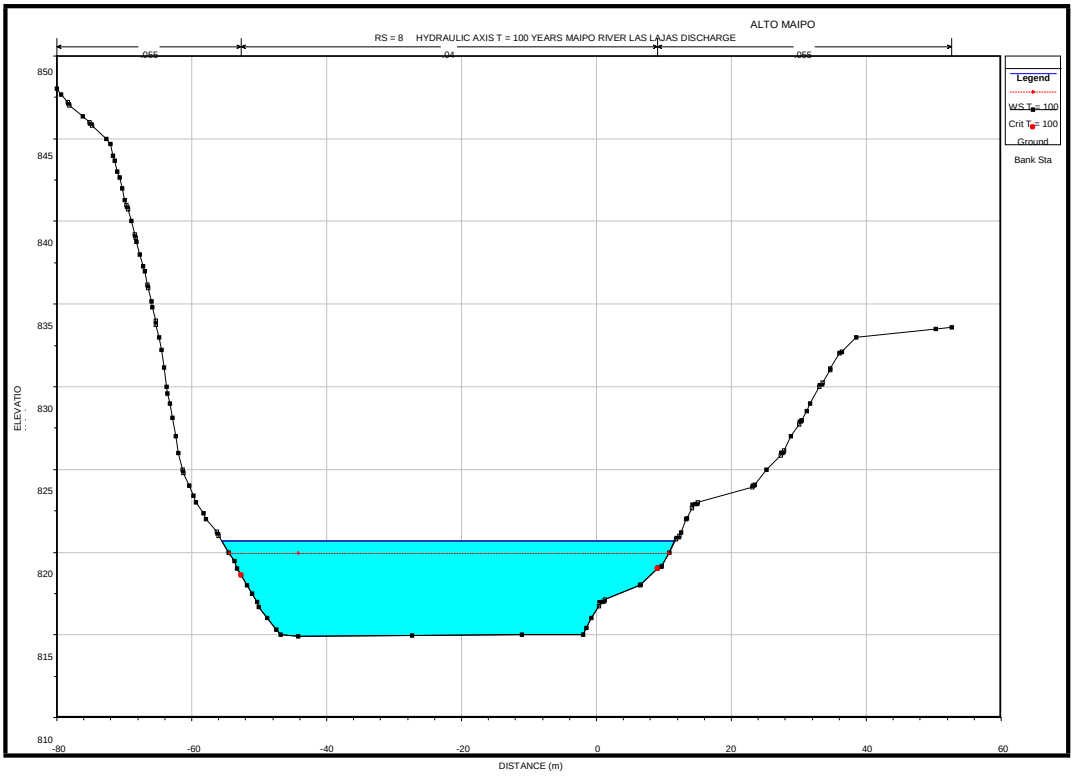

PROFILE N° 9

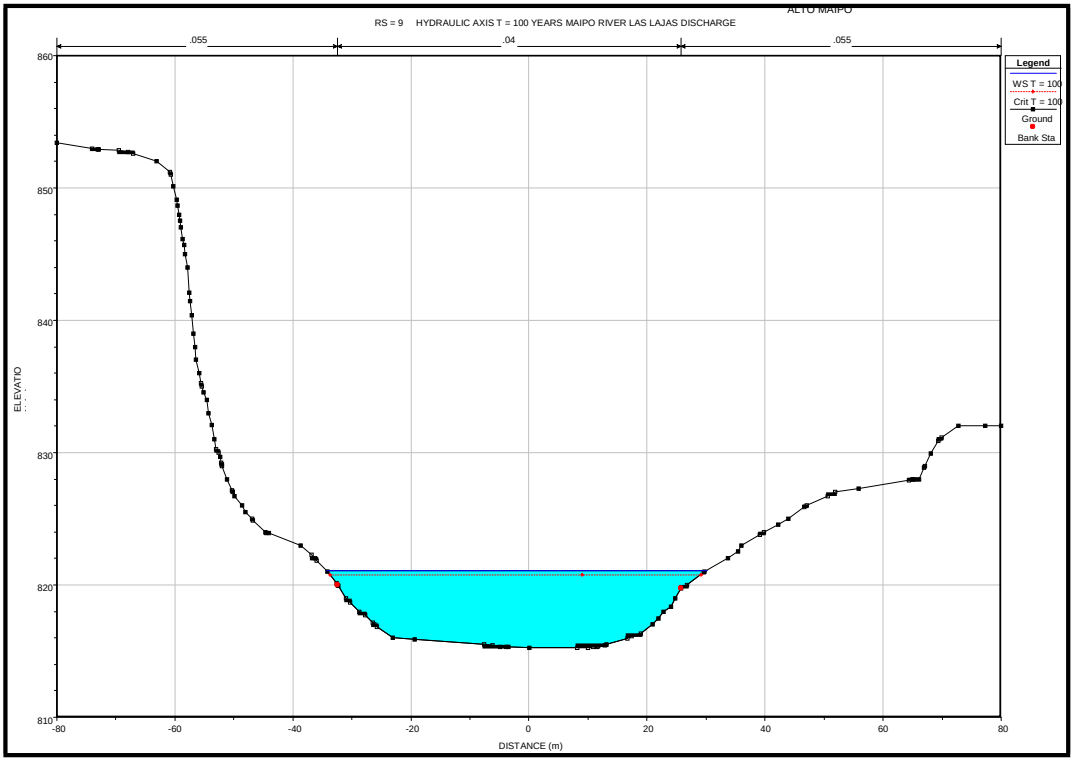


PROFILE N° 10

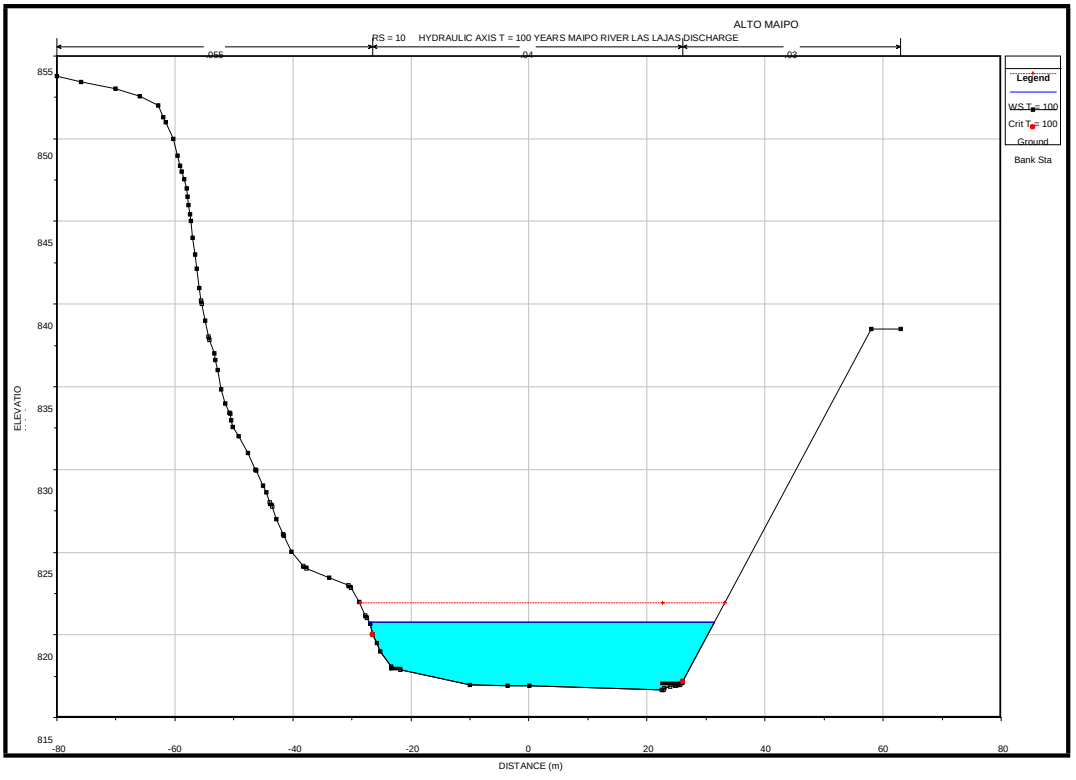

PROFILE N° 11

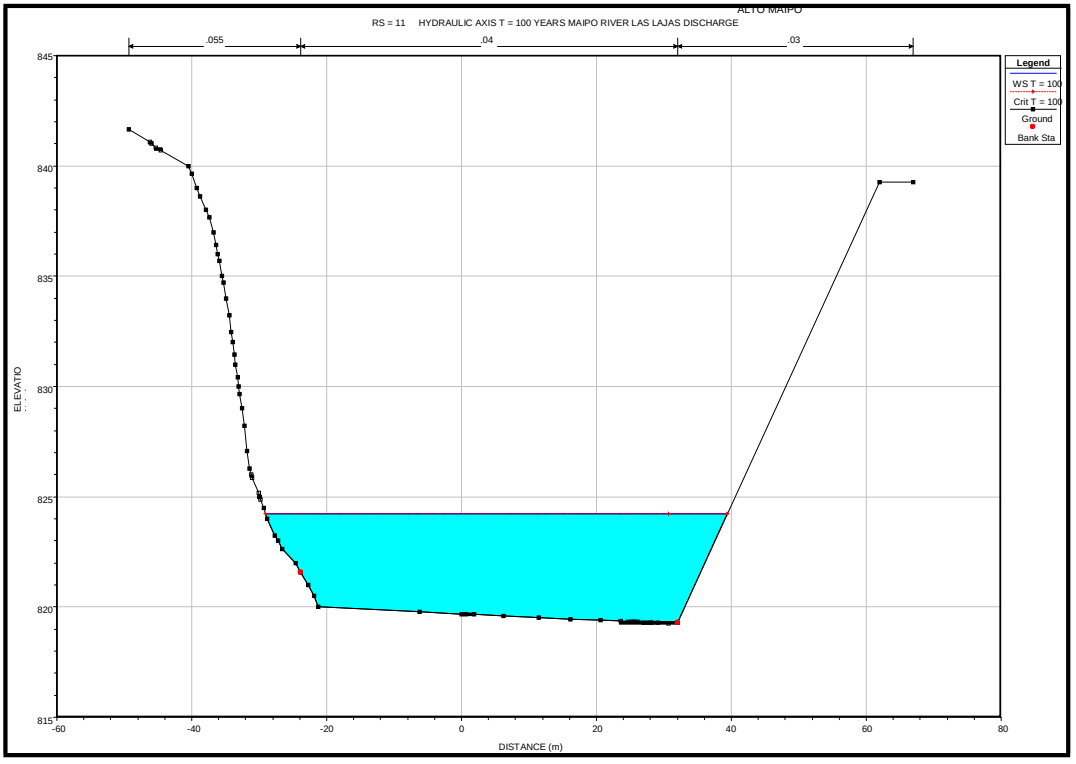


PROFILE N° 12

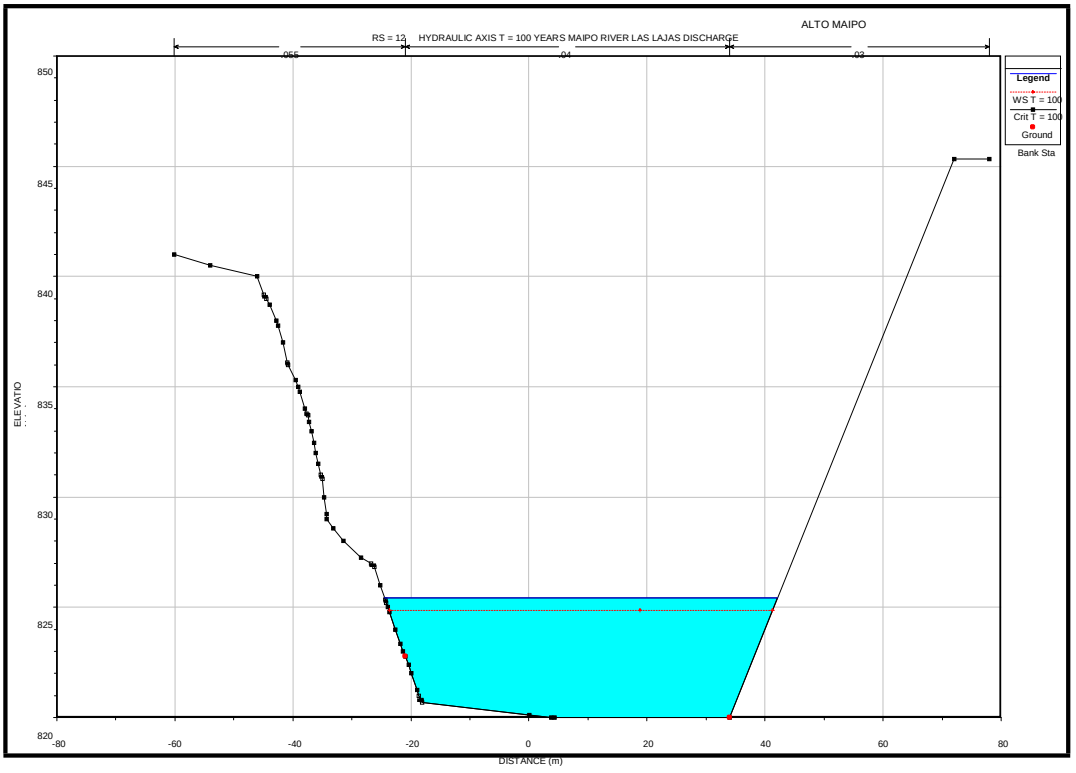

PROFILE N° 13

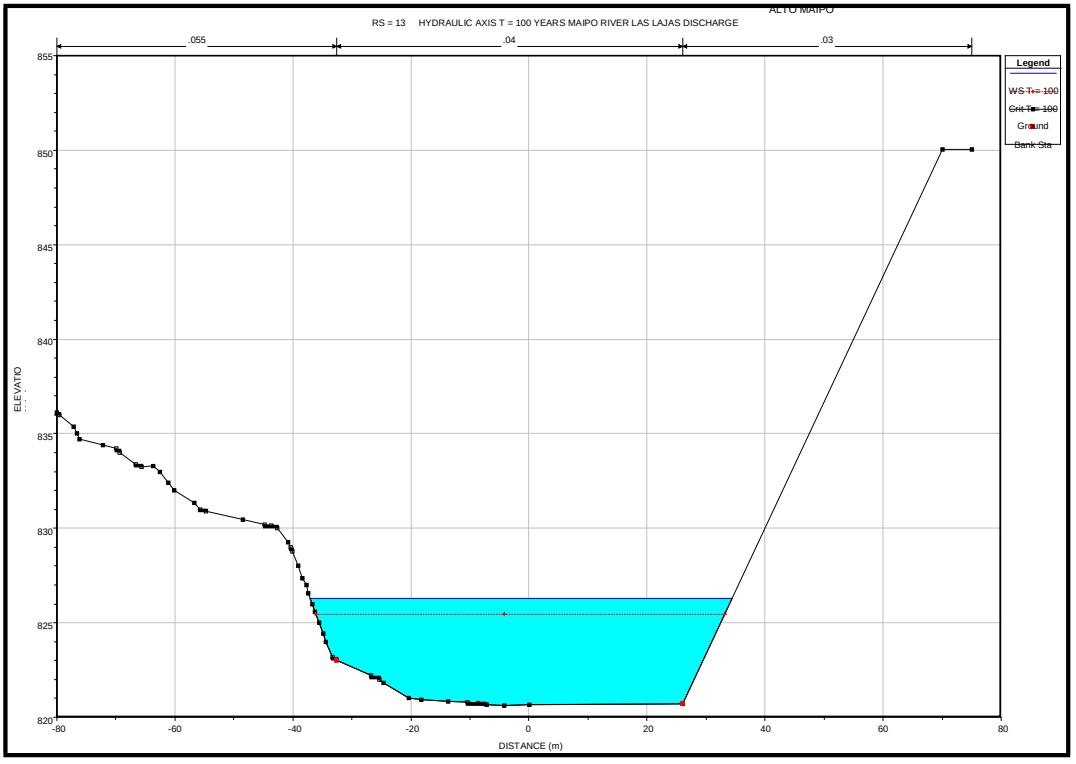


PROFILE N° 14

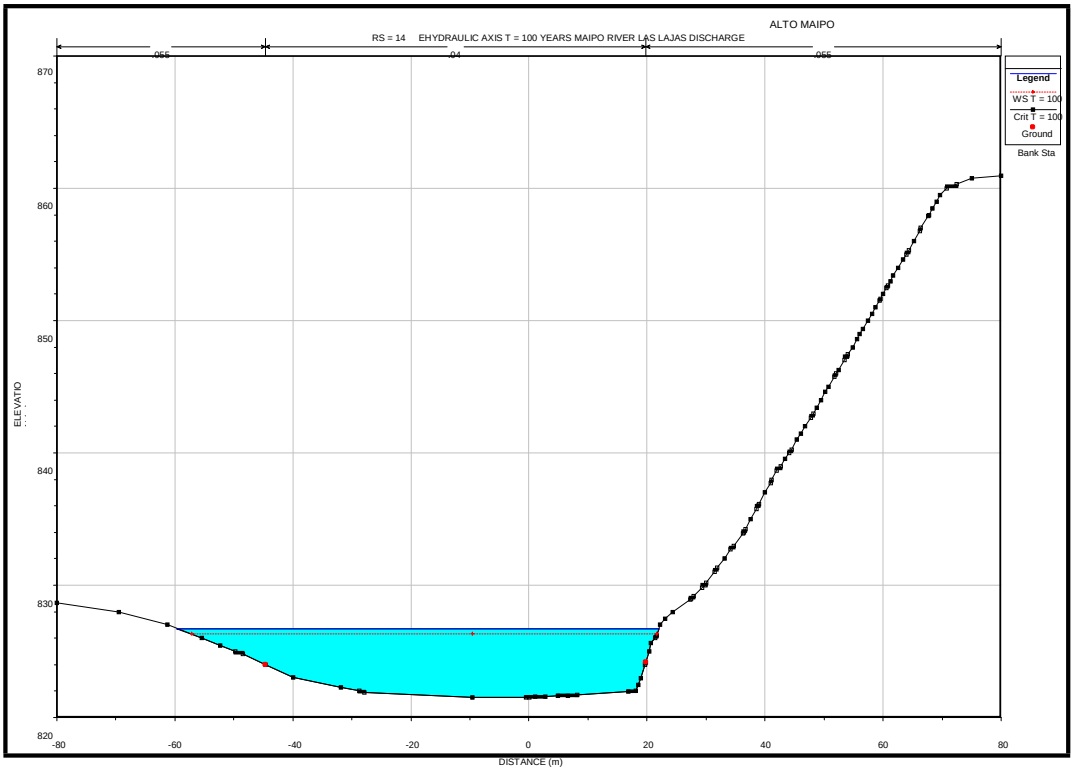

PROFILE N° 15

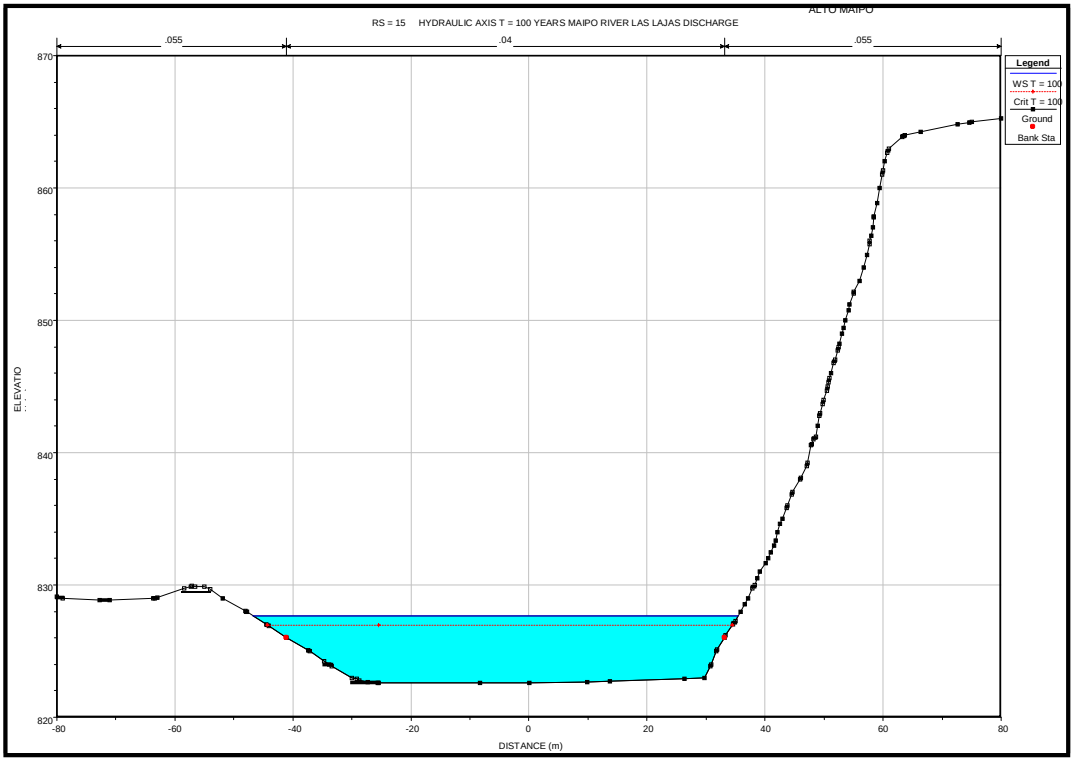


PROFILE N° 16

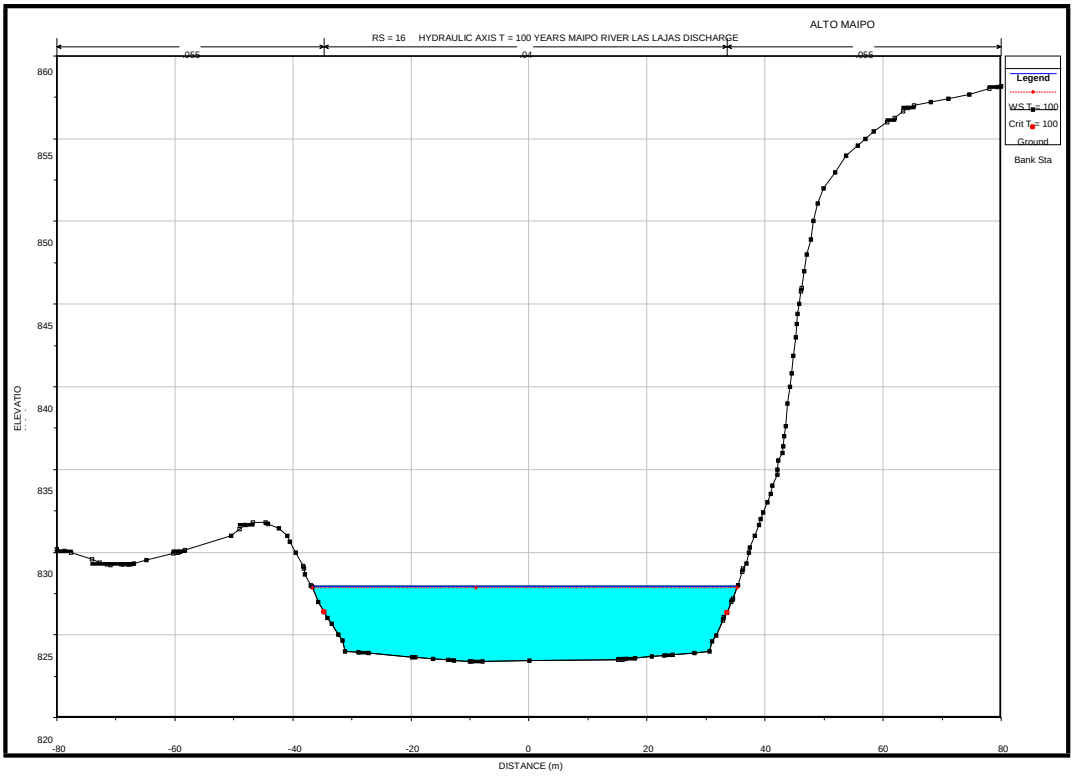

# ALTO MAIPO HYDROLECTRIC PROJECT

# BASIC ENGINEERING

AM-CO304 CONTRACT

## LAS LAJAS POWER PLANT
## CORRECTION OF THE COLORADO RIVER FLOW
## HYDRAULIC AXIS CALCULATION

| | | | | | | | |
|---|---|---|---|---|---|---|---|
| C | 09-01-08 | Information | R. Saraiva | A.Ugarte/ R.Caro / H. Mery | E. Woolvett | R. Bennewitz / A. Lyngra | P. Alvarado |
| B | 17-12-07 | Information | R. Saraiva | A.Ugarte/ R.Caro / H. Mery | E. Woolvett | R. Bennewitz / A. Lyngra | P. Alvarado |
| ISSUING | DATE | PURPOSE OF ISSUING | PREPARED | REVISED | General Coordinator APROVED | Project D. Attached APROVED | Project J. AES GENER APROVED |

CONSULTANTS

cade-idepe POCH Ingeniería Norconsult

**REVISE**

C

**N°: 020-HI-INF-008**

# INDEX


| ITEM | CONTENT | PAGE. |
|---|---|---|
| 1. | INTRODUCTION | 2 |
| 2. | OBJECTIVE AND SCOPES | 3 |
| 3. | CALCULATION BASIS | 4 |
| 3.1 | Hydraulic axis in natural flows | 4 |
| 3.2 | Flood flows | 6 |
| 3.3 | Transversal sections of the flow | 7 |
| 3.4 | Roughness coefficient | 9 |
| 3.5 | Edge conditions | 13 |
| 4. | RESULTS | 14 |
| 4.1 | Hydraulic axis in current situation ($n_{flow\ ppl}$=0.045) | 14 |
| 4.2 | Hydraulic axis in corrected flow ($n_{flow\ ppl}$=0.045) | 16 |
| 4.3 | Hydraulic axis in corrected flow ($n_{flow\ ppl}$=0.040) | 18 |
| 5. | Conclusions | 20 |

# 1. INTRODUCTION

In order to protect the collection works, located in both banks of Colorado River, it has been projected a correction of this waterway, in a trench of about 800 m. The corrected flow would be a channel of trapezoidal shape of 40 m width with talus 2:1 (H:V), which would be protected by consolidated rockfills. In the 020-CI-PLA-044 plan, the previously described project of correction of the Colorado River is presented.

.

**Figure 1.1: General scheme of Las Lajas Power Plant works.**

## 2. OBJECTIVES AND SCOPES

For the correction of the waterway project, is necessary to calculate the hydraulic axis of the Colorado River downstream of the Maitenes intake, in a tranche of 2 Km approximately. The calculation will be done for the current situation, that is to say, without the project, as well as for the corrected waterway.

The waterway will be corrected through rockfill which will be destined, to provide protection to the new hydraulic works including the area of discharge of the forebay as well.

The objective of this report is to present the results obtained from the hydraulic axis calculations in the Colorado River, in the tranche of 2 Km, located dowstream of the Maitenes intake. The obtained results will allow counting with the heights of run-off and the speeds in the corrected waterway tranche, which are the variables used in the rockfill protection of the canal talus project. Besides, it will let to verify if the correction of the flow will alter the hydraulic axis in the river at natural condition waters under the work.

# 3. CALCULATION BASES

## 3.1 Hydraulic axis en natural flow

The calculation of the hydraulic axis in a river corresponds to determination of the elevation of the free surface along the flow, from its geometric characteristics on, the roughness of the river bed and its banks, and its flows.

In order to calculate the hydraulic axis in the Colorado River, the program HEC-RAS 3.1.3 (2005) of the U.S. Army Corps of Engineer's has been used, which solves the equation of power balance (Eq. 3.1.1) through the standard pass method.

$$h_2 + Z_2 + \frac{\alpha_2 V_2^2}{2g} = h_1 + Z_1 + \frac{\alpha_1 V_1^2}{2g} + h_e \qquad \text{(Eq.3.1.1)}$$

Where:

| | | |
|---|---|---|
| $h_i$ | : | Height in section i |
| $Z_i$ | : | Elevation from bottom in section i |
| $\alpha_i$ | : | Coriolis Coefficient in section i |
| $V_i$ | : | Speed in section i |
| he | : | Load loss |

In this case the water level in section “i” is $Z_{hi}$:

$$Z_{hi} = h_i + Z_i \qquad \text{(Eq.3.1.2)}$$

The load loss ($h_e$) between two sections corresponds to a frictional loss plus the loss by contraction or expansion (singular losses). The equation for load losses is the following:

$$h_e = \langle J \rangle \cdot L + C \cdot \left| \frac{\alpha_2 V_2^2}{2g} - \frac{\alpha_1 V_1^2}{2g} \right| \qquad \text{(Eq.3.1.3)}$$

Where:

| | | |
|---|---|---|
| <J> | : | Slope of the load loss between two transversal sections |
| L | : | Distance between transversal sections |
| $\alpha_i$ | : | Coriolis Coefficient in section i |
| $V_i$ | : | Speed in section i |
| C | : | Load loss coefficient by contraction or expansion |

The contraction and expansion depend on the transition nature. In general, along a natural flow, the transitions or geometric changes are gradual, whereby high load losses are not made. According to the literature, it is recommended for gradual transitions, an expansion coefficient of 0.3 and contraction of 0.1.

For calculation of frictional losses, the program considered the method called "Average Conveyance Equation" (Average Hydraulic Conductivity Coefficient). Its expressions are the following:

$$< J > = \left( \frac{2Q}{K_1 + K_2} \right)^2 \qquad \text{(Eq.3.1.4)}$$

$$K = \frac{A \cdot R^{2/3}}{n} \qquad \text{(Eq.3.1.5)}$$

Where:

$K_i$ : Hydraulic conductivity coefficient of section i
R : Hydraulic radius
n : Manning's roughness coefficient

The load loss slope in each section, is calculated according to the Manning's equation.

$$Q = \frac{\sqrt{J}}{n} \cdot R^{2/3} \cdot A = \sqrt{J} \cdot K \qquad \text{(Eq.3.1.6)}$$

## 3.2 Flood flows

The flows used for the calculation of the hydraulic axis were obtained in the hydrological studies done for PHAM. In Table 3.1 the floods flows are presented for the different return periods considered.

Table 3.1: Flood flows Colorado River at Maitenes intake

| Tr (years) | Q ($m^3/s$) |
|---|---|
| 2 | 190 |
| 5 | 310 |
| 10 | 410 |
| 25 | 580 |
| 50 | 740 |
| 100 | 930 |
| 200 | 1,180 |

## 3.3 Transversal sections of the flow

From the topographic survey, scale 1:1.000, done by Geoexploraciones (2006) for the project, 25 transversal profiles along the Colorado River have been obtained. For the hydraulic study a total longitude of 2.200 m, with 450 m upstream the start of the Colorado River correction and 933 m downstream the end of the correction has been considered. The location of the transversal profiles is shown in Figure 3.3.1.

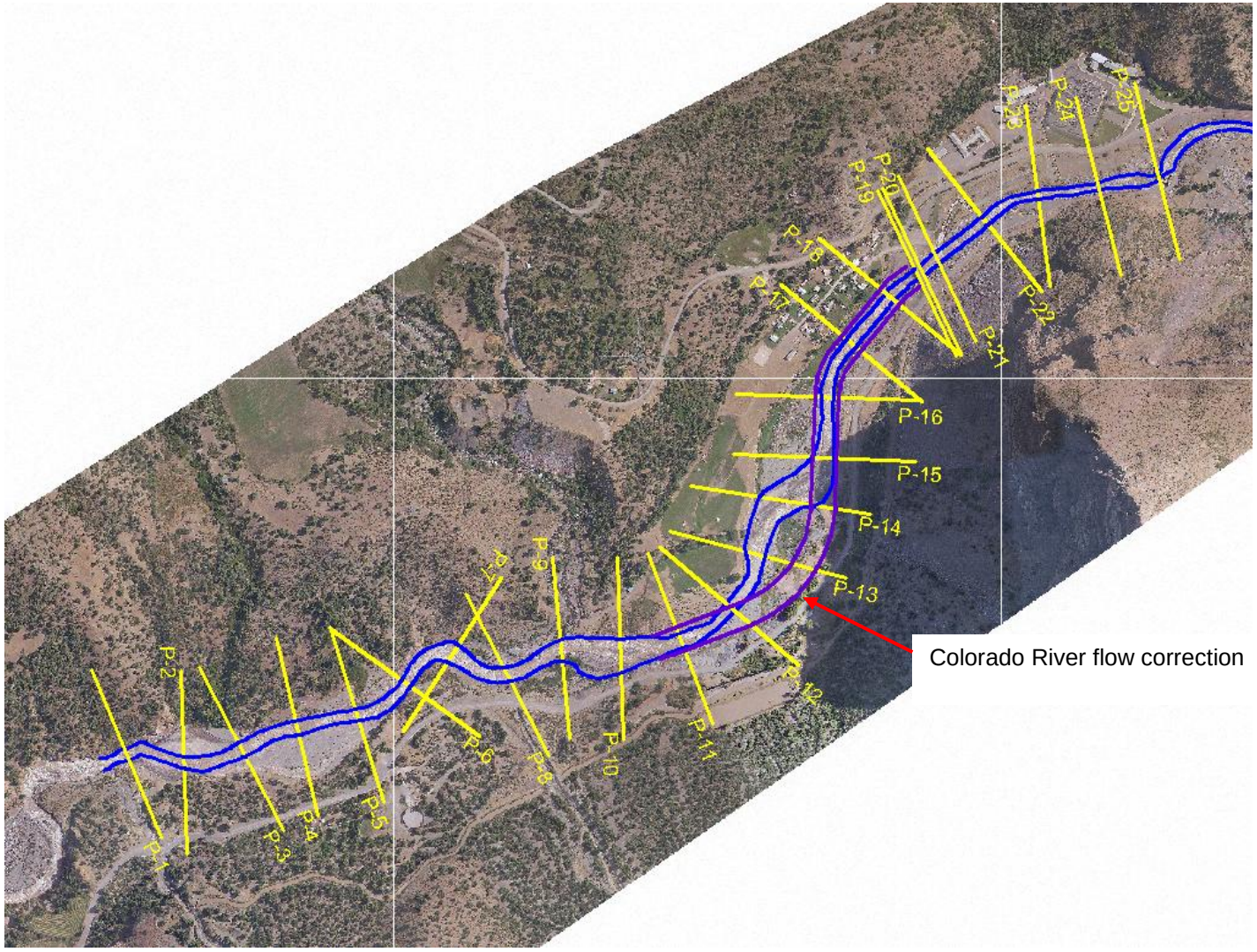


Figure 3.3.1: Location of the transversal profiles in the Colorado River flow

## 3.4 Roughness coefficient

The Colorado River, in the tranche of study, presents a granular river bed, of coarse and extended granulometry, with a well-defined main flow, low presence of bends and little vegetation in its banks. Figures 3.3.1 and 3.3.2 correspond to photographs of the river in the studied area.

In the main place, the Cowan's method has been applied in order to estimate roughness of the main flow and of the flood zones in the river banks. The expression for determining Manning's coefficient is the following:

$$n = (n_0 + n_0 + n_0 + n_0) \cdot m_5 \qquad \text{(Eq.3.4.1)}$$

Where:

$n_0$ : Roughness coefficient base for a straight, uniform and even canal.
$n_1$ : Irregularity degree of the section
$n_2$ : Variation of the transversal section
$n_3$ : Obstructions effect
$n_4$ : Vegetation Presence
$m_5$ : Correction factor by effect of meanders

The obtained results are presented in the following table:

Table 3.4.1. Roughness coefficient of the Colorado River according to Cowan's method.

| Coefficient | Right Bank | Main Flow | Bank Left |
|---|---|---|---|
| $n_0$ | 0.028 | 0.028 | 0.028 |
| $n_1$ | 0.010 | 0.005 | 0.010 |
| $n_2$ | 0.005 | 0.005 | 0.005 |
| $n_3$ | 0.010 | 0.000 | 0.010 |
| $n_4$ | 0.005 | 0.005 | 0.005 |
| $m_5$ | 1.000 | 1.000 | 1.000 |
| n | 0.058 | 0.043 | 0.058 |

Figure 3.4.1: Colorado river, upstream view Profile 7

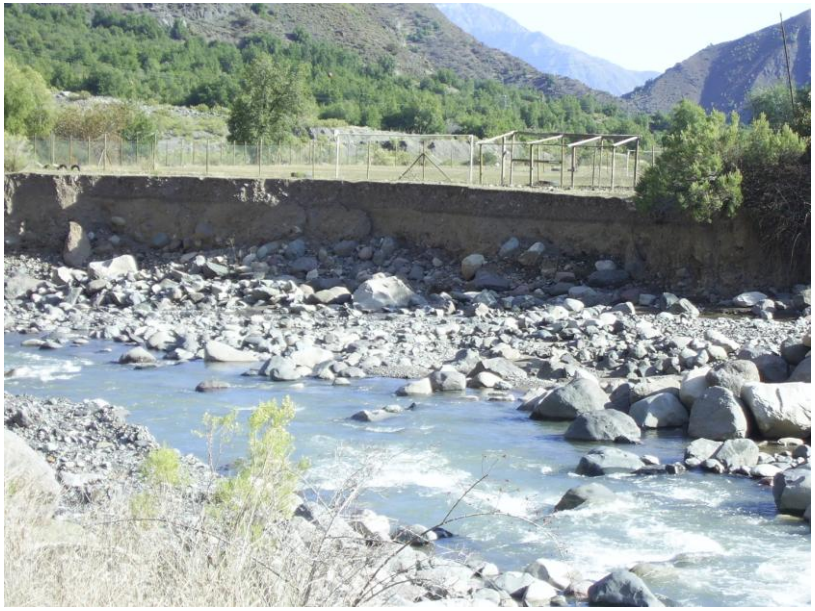

Figure 3.4.2: Colorado river, downstream area of carry out of forebay view (Profile 13)

On the other hand, and according to Ugarte, A. and Madrid, M (1994), the roughness coefficient of the main flow can be calculated from the diameters characteristics of the river bed material. The equations proposed by these researchers are the following:

$$n = \frac{(0 \cdot D_{50\%})^{1/6}}{21} \qquad \text{(Eq.3.4.2)}$$

$$n = \frac{(3,4 \cdot D_{84\%})^{1/6}}{21} \qquad \text{(Eq.3.4.3)}$$

For the hydraulic study of the Colorado River, the granulometry of the flow has been considered in two points. Colorado at outlet and Colorado before joint with Olivares. In Table 3.3.2 the diameter characteristic of the flow in the previously mentioned points and the values of n when applying the equations are presented in 3.4.2 and 3.4.3.

Table 3.4.2: Calculated Roughness coefficient

| Point | $D_{50\%}$ (mm) | n ($D_{50\%}$) | $D_{84\%}$ (mm) | n ($D_{84\%}$) |
|---|---|---|---|---|
| Colorado at outlet | 66.9 | 0.045 | 217.4 | 0.045 |
| Colorado before joint with Olivares | 88.8 | 0.047 | 189.5 | 0.044 |

Averaging the roughness coefficient to the main flow, n = 0.045 is obtained which is practically equal to the one obtained applying Cowan's method; besides is concordant with the values mentioned in the book "Roughness Characteristics of Natural Channels" of the U.S Geological Survey, Water Supply, paper 1849, 1967.

Table 3.4.3 presents values of Manning's coefficient based on the measures carried out on field by Madrid, M (1992) in the Colorado river.

Table 3.4.3: Experimental values of n in the Colorado river

| Flow | Q (m³/s) | A (m²) | Vm (m/s) | P (m) | L (m) | Rh (m) | Fd | J (m/m) | n measured |
|---|---|---|---|---|---|---|---|---|---|
| Colorado at outlet | 74 | 26.61 | 2.78 | 18.91 | 17.2 | 1.41 | 0.71 | 0.0100 | 0.0452 |
| | 24 | 15.86 | 1.51 | 16.64 | 15.6 | 0.95 | 0.48 | 0.0090 | 0.0607 |
| | 66.3 | 23.67 | 2.80 | 18.45 | 16.2 | 1.28 | 0.74 | 0.0105 | 0.0432 |
| | 45 | 20.95 | 2.15 | 17.86 | 16.2 | 1.17 | 0.60 | 0.0097 | 0.0510 |
| Colorado before joint with Olivares | 18 | 12.95 | 1.39 | 32.44 | 32.2 | 0.40 | 0.70 | 0.0161 | 0.0495 |
| | 52.52 | 23.15 | 2.27 | 37.14 | 36.7 | 0.62 | 0.91 | 0.0146 | 0.0389 |
| | 47.9 | 22.42 | 2.14 | 35.60 | 35.1 | 0.63 | 0.85 | 0.0146 | 0.0416 |
| | 28.5 | 16.02 | 1.78 | 33.80 | 33.2 | 0.47 | 0.82 | 0.0160 | 0.0432 |

The coefficient obtained in Colorado at Outlet, which corresponds to the zone closest to the studied tranche, presents values close to those determined through the semi empiric methods previously applied for the mayor flows.

In the case of Colorado before the Joint with Olivares, the values of n present minor dispersion that in the previous case. Nevertheless, in both points, the values measured in field are about those calculated, which makes it valid to suppose for the calculation of the hydraulic axis the following values of roughness coefficient:

| | | n maximum | n minimum |
|---|---|---|---|
| Main Flow | : | 0.045 | 0.040 |
| Flood Plains | : | 0.055 | 0.055 |

## 3.5 Conditions of edge

For calculation of the hydraulic axis is necessary, besides some other geometric data and flow, to establish conditions of edge according to the existing hydraulic controls in the analyzed flow.

In the case of a run-off of a river, the edge condition is given from downstream, contrary to this, a torrent is considered from upstream.

In this analysis a mixed run-off has been supposed, that is to say, it requires two edge conditions, one upstream and another downstream. The conditions entered to HEC_RAS, in both cases, was the normal height for which the software requires the slopes for its calculation. The entered values were:

- Upstream i=0.01818
- Downstream i=0.01537

# 4. RESULTS

## 4.1 Hydraulic axis in current situation ($n_{flow\ ppl}$ =0,045)

In Figure 4.1.1 the longitudinal profile is shown with the results obtained from the hydraulic axis in Colorado river for the current situation in a return period of Tr=100 years. Details of the hydraulic axis calculation or all the transversal profiles are presented in Annex 1.

The results obtained from the hydraulic axis calculation in the Colorado river allow to establish that, the analyzed tranche produces a practically critical run-off with some sections where a torrent with a number of Froude appears very near to 1.

In profile 19, a crisis is produced due to the narrowing generated by the existing bridge, therefore the run-off is banked towards upstream up to profile 21, that is to say, a subcritical run-off is produced. Between profile 25 and 22 a torrent is produced, which is made compatible with the river through a hydraulic ledge.

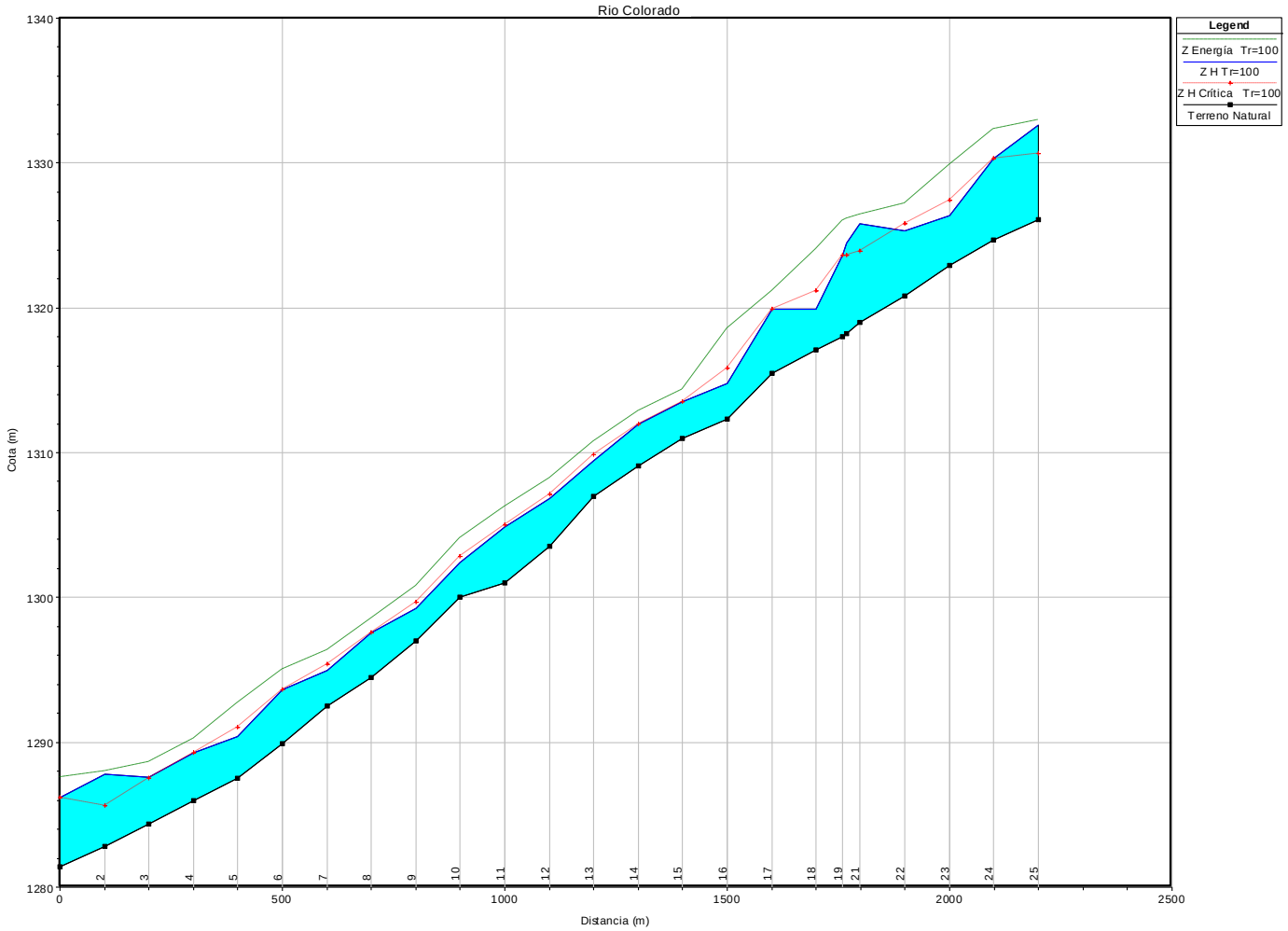


Figure 4.1.1: The hydraulic axis in the Colorado river in current situation (n=0.045).

## 4.2 Hydraulic axis in corrected flow ($n_{flow\ ppl}$ =0,045)

In Figure 4.1.2 the longitudinal profile is shown with the results obtained from the hydraulic axis in Colorado river for the corrected flow, with a return period of Tr=100 years. Details of the hydraulic axis calculation or all the transversal profiles are presented in Annex 2.

The obtained results allow to conclude that upstream, of the end of correction, this does not modify the natural hydraulic axis of Colorado river. Downstream, the hydraulic control is given by the existing bridge, therefore the natural hydraulic axis is not affected.

In the corrected channel (between profiles 11 and 18) a torrent run-off is produced with heights varying between 2.4 and 3.4 m. The maximum speed in tranche 6.7 m/s.

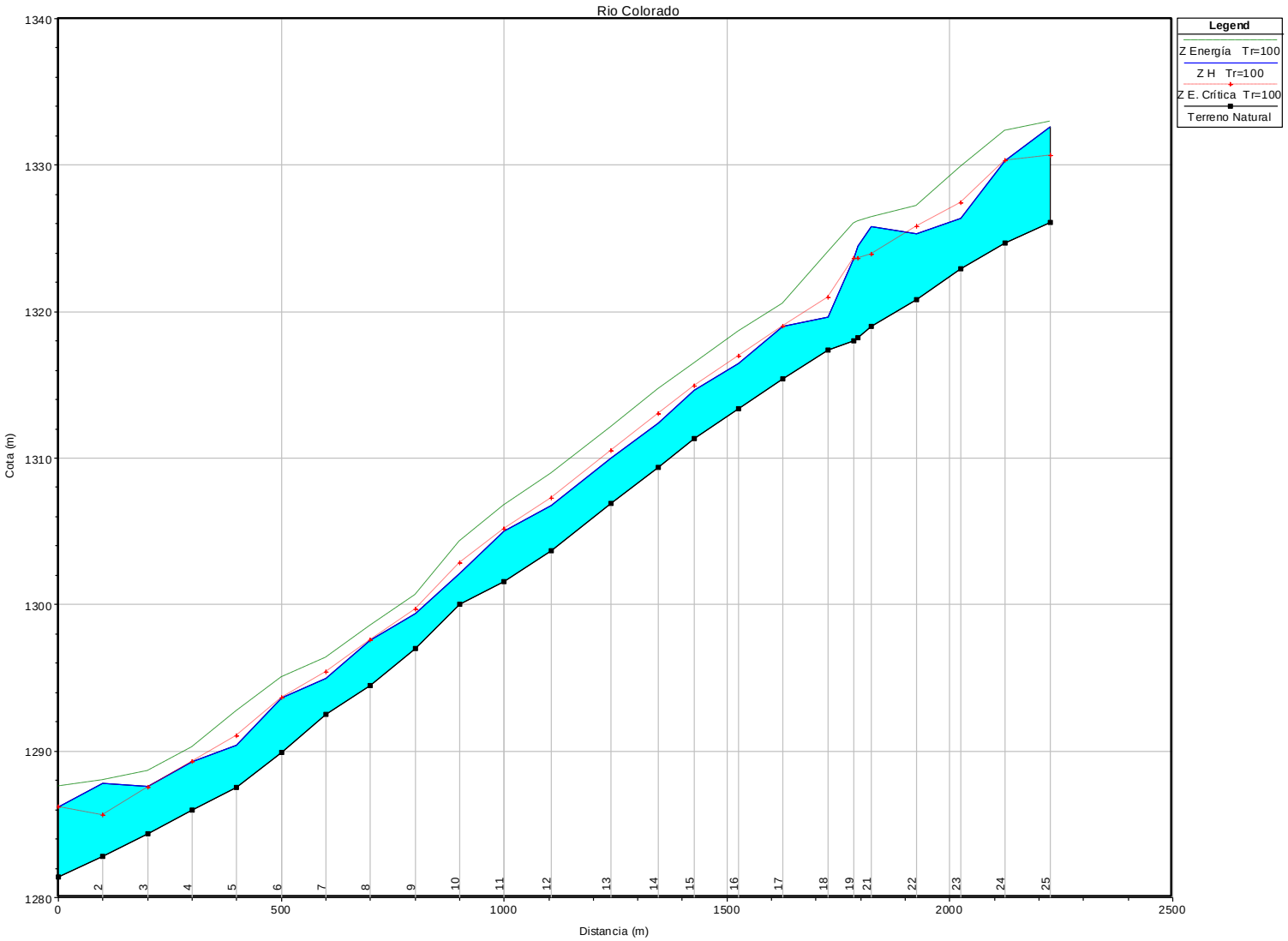


Figure 4.1.2: The hydraulic axis in the Colorado river in corrected flow is n=0.045.

## 4.3 Hydraulic axis in corrected flow ($n_{flow\ ppl}$ =0,040)

In Figure 4.1.3 the longitudinal profile is shown with the results obtained from the hydraulic axis in Colorado river for the corrected flow, with a return period of Tr=100 years. Details of the hydraulic axis calculation or all the transversal profiles are presented in Annex 3.

For the roughness coefficient of the main flow of 0.040, the maximum speed at the corrected flow is 7.1 m/s, while the heights vary between 2.1 and 3.1 m.

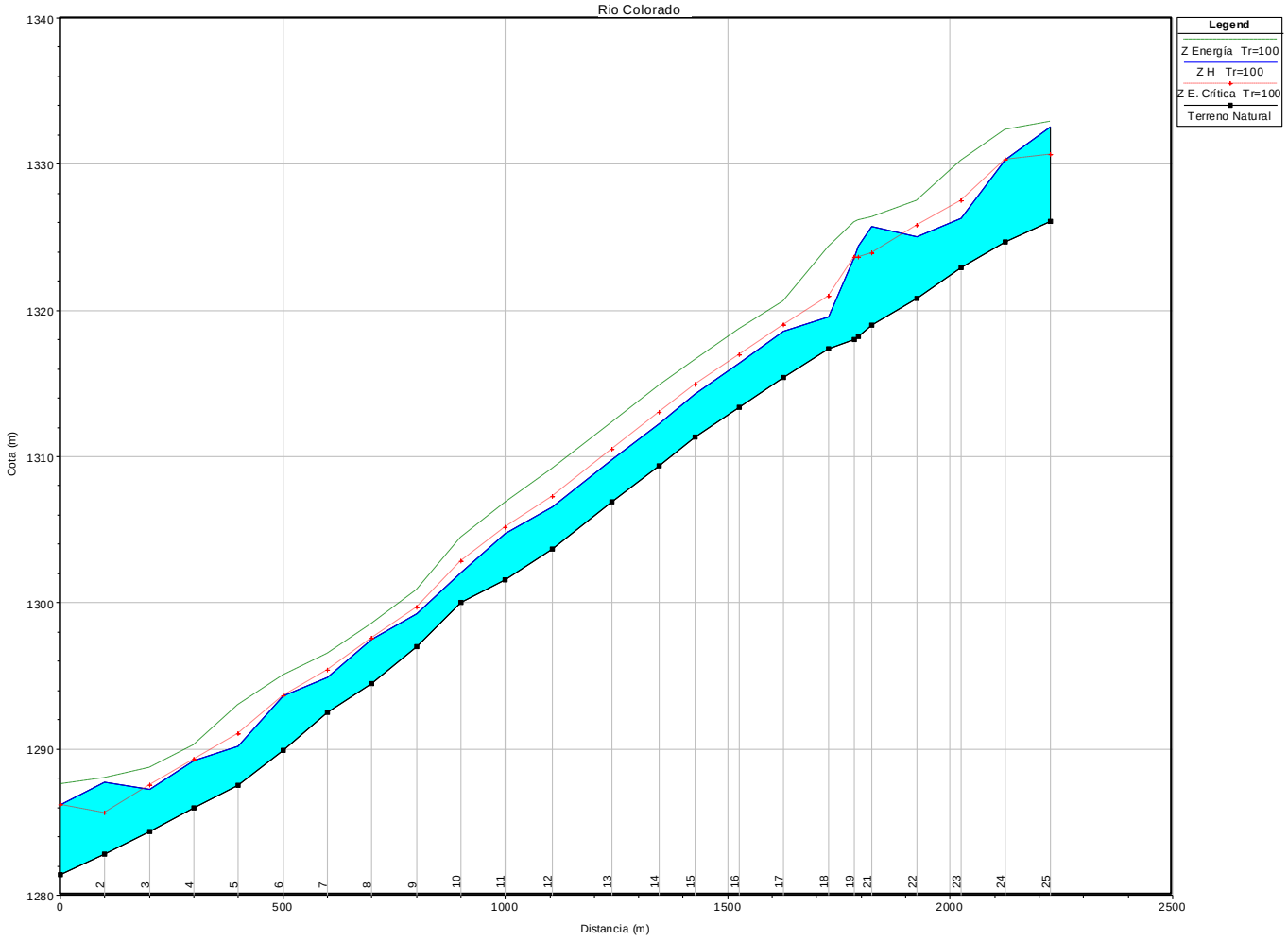


Figure 4.1.3: The hydraulic axis in the Colorado river in corrected flow is n=0.040.

## 5. CONCLUSIONS

The results obtained from the hydraulic axis calculation in the Colorado river allow to establish that, the analyzed tranche produces a torrent run-off between profile 25 and profile 22, controlled by the levels at the Maitenes intake.

In profile 19, due to the narrowing of the flow generated by the existing bridge, a crisis is produced. Downstream of such point, run-off goes into a torrent regime with heights very near to critical. Upstream, the crisis produces a banking up to profile 21 where a hydraulic ledge is produced between profile 22 and 21 (see figures 4.1.1, 4.2.2, and 4.1.3).

The fact that run-off is a torrent regime, downstream the bridge, ensures the effect of discharges considering that the works of the forebay will not be spread upstream towards the bridge.

With regards the speeds and heights of the run-off in the corrected flow of Colorado river, for all the transversal sections, the variations are very small when decreasing the value of n from 0.045 to 0.040.

Finally, it is possible to establish that the correction of the Colorado river flow does not alter the natural hydraulic axis of this river downstream the end of the correction (x=900 m) as it can be seen in figure 5.1 next.

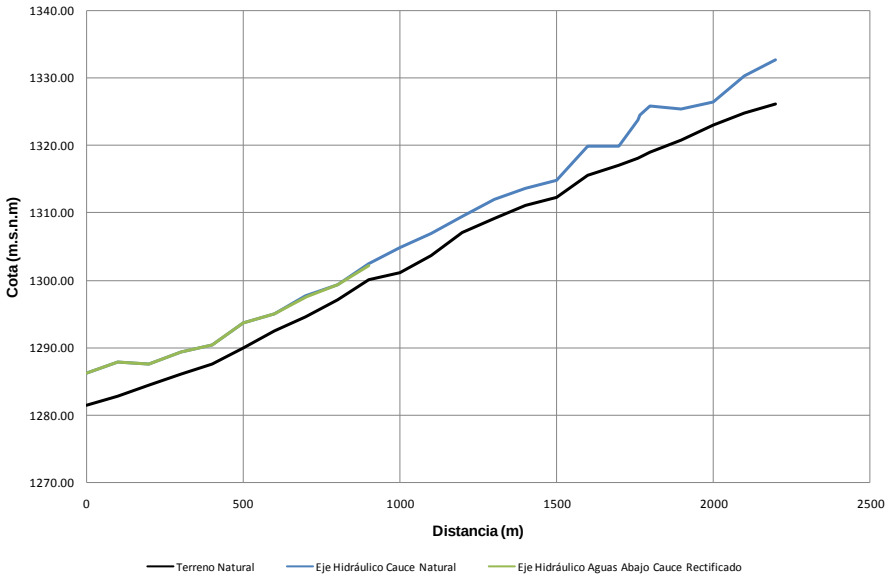


Figure 5.1: Colorado river hydraulic axis

# ANNEX 1

## Hydraulic Axis
## Current Situation of Colorado river
## (n=0.045)

# ANNEX 2

## Hydraulic Axis
## Corrected Flow of Colorado River
## (n=0.045)

# ANNEX 3

## Hydraulic Axis
## Corrected Flow of Colorado River
## (n=0.040)

Anexo 3
Río Colorado
Cauce Rectificado
(n=0,040)

| Profile | x (m) | Tr (years) | Flow ($m^3/s$) | Bottom Z (m.a.s.l) | Z H (m.a.s.l) | H (m) | Critical H (m) | Energy Z (m.a.s.l) | Critical Z E. (m.a.s.l) | J (m/m) | Speed (m/s) | Area Esc. ($m^2$) | Wet Per. (m) | Hydraulic R. (m) | Sup. Width (m) | Froude N° |
|---|---|---|---|---|---|---|---|---|---|---|---|---|---|---|---|---|
| 1 | 0 | 2 | 190 | 1281.40 | 1283.43 | 2.03 | 2.03 | 1284.18 | 1284.18 | 0.01404 | 3.83 | 49.56 | 33.67 | 1.47 | 32.53 | 0.99 |
| | | 5 | 310 | 1281.40 | 1284.06 | 2.66 | 2.66 | 1285.01 | 1285.01 | 0.01323 | 4.31 | 71.92 | 39.20 | 1.83 | 37.65 | 1.00 |
| | | 10 | 410 | 1281.40 | 1284.52 | 3.12 | 3.12 | 1285.58 | 1285.58 | 0.01276 | 4.55 | 90.07 | 44.02 | 2.05 | 42.19 | 0.99 |
| | | 25 | 580 | 1281.40 | 1285.18 | 3.78 | 3.78 | 1286.36 | 1286.36 | 0.01222 | 4.82 | 120.28 | 52.19 | 2.30 | 49.95 | 0.99 |
| | | 50 | 740 | 1281.40 | 1285.67 | 4.27 | 4.27 | 1286.97 | 1286.97 | 0.01204 | 5.06 | 146.35 | 58.50 | 2.50 | 55.96 | 1.00 |
| | | 100 | 930 | 1281.40 | 1286.21 | 4.81 | 4.81 | 1287.58 | 1287.58 | 0.01125 | 5.14 | 180.93 | 71.90 | 2.52 | 68.99 | 1.01 |
| | | 200 | 1180 | 1281.40 | 1286.71 | 5.31 | 5.31 | 1288.28 | 1288.28 | 0.01046 | 5.46 | 216.18 | 74.64 | 2.90 | 71.40 | 1.00 |
| 2 | 100 | 2 | 190 | 1282.80 | 1284.65 | 1.85 | 1.29 | 1284.78 | 1284.48 | 0.00289 | 1.62 | 117.48 | 88.99 | 1.32 | 88.45 | 0.45 |
| | | 5 | 310 | 1282.80 | 1285.35 | 2.55 | 1.60 | 1285.50 | 1284.94 | 0.00197 | 1.71 | 181.12 | 94.53 | 1.92 | 93.75 | 0.39 |
| | | 10 | 410 | 1282.80 | 1285.86 | 3.06 | 1.83 | 1286.02 | 1285.27 | 0.00165 | 1.78 | 229.82 | 98.69 | 2.33 | 97.75 | 0.37 |
| | | 25 | 580 | 1282.80 | 1286.59 | 3.79 | 2.18 | 1286.78 | 1285.77 | 0.00141 | 1.91 | 302.90 | 103.80 | 2.92 | 102.63 | 0.36 |
| | | 50 | 740 | 1282.80 | 1287.17 | 4.37 | 2.47 | 1287.38 | 1286.20 | 0.00133 | 2.03 | 363.74 | 109.00 | 3.34 | 107.60 | 0.35 |
| | | 100 | 930 | 1282.80 | 1287.74 | 4.94 | 2.79 | 1287.98 | 1286.65 | 0.00133 | 2.18 | 427.49 | 115.87 | 3.69 | 114.23 | 0.36 |
| | | 200 | 1180 | 1282.80 | 1288.41 | 5.61 | 3.18 | 1288.69 | 1287.20 | 0.00128 | 2.33 | 505.64 | 122.46 | 4.13 | 120.43 | 0.36 |
| 3 | 200 | 2 | 190 | 1284.37 | 1285.77 | 1.40 | 1.49 | 1286.32 | 1286.31 | 0.02168 | 3.31 | 57.48 | 67.55 | 0.85 | 67.28 | 1.14 |
| | | 5 | 310 | 1284.37 | 1286.11 | 1.74 | 1.87 | 1286.84 | 1286.82 | 0.02125 | 3.81 | 81.47 | 76.35 | 1.07 | 76.00 | 1.17 |
| | | 10 | 410 | 1284.37 | 1286.32 | 1.95 | 2.12 | 1287.21 | 1287.18 | 0.02111 | 4.19 | 97.84 | 78.95 | 1.24 | 78.50 | 1.20 |
| | | 25 | 580 | 1284.37 | 1286.63 | 2.26 | 2.49 | 1287.77 | 1287.72 | 0.02052 | 4.73 | 122.72 | 80.94 | 1.52 | 80.33 | 1.22 |
| | | 50 | 740 | 1284.37 | 1286.91 | 2.54 | 2.81 | 1288.23 | 1288.17 | 0.01960 | 5.09 | 145.24 | 82.71 | 1.76 | 81.96 | 1.22 |
| | | 100 | 930 | 1284.37 | 1287.27 | 2.90 | 3.14 | 1288.70 | 1288.66 | 0.01698 | 5.31 | 175.21 | 84.24 | 2.08 | 83.26 | 1.17 |
| | | 200 | 1180 | 1284.37 | 1287.73 | 3.36 | 3.55 | 1289.28 | 1289.26 | 0.01436 | 5.51 | 214.04 | 85.72 | 2.50 | 84.40 | 1.11 |
| 4 | 300 | 2 | 190 | 1285.97 | 1287.75 | 1.78 | 1.77 | 1288.20 | 1288.20 | 0.01623 | 2.99 | 63.65 | 70.13 | 0.91 | 69.81 | 1.00 |
| | | 5 | 310 | 1285.97 | 1288.17 | 2.20 | 2.20 | 1288.68 | 1288.68 | 0.01568 | 3.15 | 98.28 | 97.18 | 1.01 | 96.69 | 1.00 |
| | | 10 | 410 | 1285.97 | 1288.39 | 2.42 | 2.42 | 1288.99 | 1288.99 | 0.01472 | 3.42 | 119.87 | 100.12 | 1.20 | 99.48 | 0.99 |
| | | 25 | 580 | 1285.97 | 1288.71 | 2.74 | 2.74 | 1289.45 | 1289.45 | 0.01357 | 3.82 | 151.98 | 101.28 | 1.50 | 100.45 | 0.99 |
| | | 50 | 740 | 1285.97 | 1288.98 | 3.01 | 3.01 | 1289.85 | 1289.85 | 0.01297 | 4.13 | 178.98 | 102.26 | 1.75 | 101.25 | 0.99 |
| | | 100 | 930 | 1285.97 | 1289.19 | 3.22 | 3.30 | 1290.29 | 1290.28 | 0.01424 | 4.64 | 200.37 | 103.26 | 1.94 | 102.14 | 1.06 |
| | | 200 | 1180 | 1285.97 | 1289.38 | 3.41 | 3.67 | 1290.85 | 1290.81 | 0.01699 | 5.36 | 220.03 | 104.20 | 2.11 | 102.97 | 1.17 |
| 5 | 400 | 2 | 190 | 1287.50 | 1289.08 | 1.58 | 1.74 | 1289.76 | 1289.72 | 0.02799 | 3.66 | 51.94 | 63.49 | 0.82 | 62.88 | 1.28 |
| | | 5 | 310 | 1287.50 | 1289.31 | 1.81 | 2.12 | 1290.41 | 1290.28 | 0.03310 | 4.65 | 66.72 | 64.60 | 1.03 | 63.84 | 1.45 |
| | | 10 | 410 | 1287.50 | 1289.48 | 1.98 | 2.40 | 1290.91 | 1290.68 | 0.03601 | 5.30 | 77.30 | 65.39 | 1.18 | 64.52 | 1.55 |
| | | 25 | 580 | 1287.50 | 1289.72 | 2.22 | 2.81 | 1291.70 | 1291.29 | 0.03963 | 6.23 | 93.14 | 66.55 | 1.40 | 65.53 | 1.67 |
| | | 50 | 740 | 1287.50 | 1289.94 | 2.44 | 3.17 | 1292.35 | 1291.81 | 0.04051 | 6.87 | 107.69 | 67.48 | 1.60 | 66.29 | 1.72 |
| | | 100 | 930 | 1287.50 | 1290.22 | 2.72 | 3.55 | 1292.99 | 1292.38 | 0.03843 | 7.38 | 126.09 | 68.29 | 1.85 | 66.84 | 1.71 |
| | | 200 | 1180 | 1287.50 | 1290.56 | 3.06 | 4.02 | 1293.76 | 1293.06 | 0.03614 | 7.92 | 148.95 | 69.21 | 2.15 | 67.46 | 1.70 |

Anexo 3
Río Colorado
Cauce Rectificado
(n=0,040)

| | | | | | | | | | | | | | | | | |
|---|---|---|---|---|---|---|---|---|---|---|---|---|---|---|---|---|
| 6 | 500 | 2 | 190 | 1289.90 | 1291.32 | 1.42 | 1.53 | 1292.04 | 1292.03 | 0.01870 | 3.74 | 50.86 | 44.53 | 1.14 | 44.14 | 1.11 |
| | | 5 | 310 | 1289.90 | 1291.83 | 1.93 | 2.04 | 1292.71 | 1292.70 | 0.01658 | 4.16 | 74.53 | 50.76 | 1.47 | 50.26 | 1.09 |
| | | 10 | 410 | 1289.90 | 1292.19 | 2.29 | 2.37 | 1293.17 | 1293.17 | 0.01498 | 4.40 | 93.24 | 54.11 | 1.72 | 53.48 | 1.06 |
| | | 25 | 580 | 1289.90 | 1292.73 | 2.83 | 2.86 | 1293.86 | 1293.86 | 0.01278 | 4.72 | 122.92 | 56.97 | 2.16 | 56.09 | 1.02 |
| | | 50 | 740 | 1289.90 | 1293.19 | 3.29 | 3.29 | 1294.44 | 1294.44 | 0.01167 | 4.95 | 149.40 | 60.14 | 2.48 | 59.00 | 0.99 |
| | | 100 | 930 | 1289.90 | 1293.65 | 3.75 | 3.75 | 1295.05 | 1295.05 | 0.01148 | 5.24 | 177.48 | 64.87 | 2.74 | 63.45 | 1.00 |
| | | 200 | 1180 | 1289.90 | 1294.20 | 4.30 | 4.30 | 1295.75 | 1295.75 | 0.01101 | 5.52 | 213.80 | 70.07 | 3.05 | 68.35 | 1.00 |
| 7 | 600 | 2 | 190 | 1292.50 | 1293.73 | 1.23 | 1.37 | 1294.30 | 1294.26 | 0.02716 | 3.22 | 59.00 | 86.00 | 0.69 | 85.73 | 1.24 |
| | | 5 | 310 | 1292.50 | 1294.00 | 1.50 | 1.69 | 1294.77 | 1294.72 | 0.02528 | 3.73 | 83.08 | 96.08 | 0.86 | 95.77 | 1.28 |
| | | 10 | 410 | 1292.50 | 1294.17 | 1.67 | 1.81 | 1295.12 | 1295.06 | 0.02564 | 4.12 | 99.63 | 98.17 | 1.01 | 97.82 | 1.30 |
| | | 25 | 580 | 1292.50 | 1294.45 | 1.95 | 2.33 | 1295.66 | 1295.54 | 0.02514 | 4.53 | 128.06 | 109.17 | 1.17 | 108.73 | 1.33 |
| | | 50 | 740 | 1292.50 | 1294.67 | 2.17 | 2.60 | 1296.09 | 1295.91 | 0.02465 | 4.85 | 152.51 | 115.85 | 1.32 | 115.37 | 1.35 |
| | | 100 | 930 | 1292.50 | 1294.91 | 2.41 | 2.88 | 1296.54 | 1296.30 | 0.02403 | 5.11 | 181.85 | 124.12 | 1.47 | 123.59 | 1.35 |
| | | 200 | 1180 | 1292.50 | 1295.17 | 2.67 | 3.20 | 1297.05 | 1296.78 | 0.02364 | 5.49 | 215.13 | 126.27 | 1.70 | 125.66 | 1.34 |
| 8 | 700 | 2 | 190 | 1294.46 | 1296.12 | 1.66 | 1.67 | 1296.52 | 1296.52 | 0.01707 | 2.80 | 67.82 | 85.35 | 0.79 | 85.14 | 1.00 |
| | | 5 | 310 | 1294.46 | 1296.40 | 1.94 | 1.99 | 1296.98 | 1296.98 | 0.01744 | 3.38 | 91.85 | 88.86 | 1.03 | 88.58 | 1.06 |
| | | 10 | 410 | 1294.46 | 1296.62 | 2.16 | 2.25 | 1297.31 | 1297.30 | 0.01654 | 3.67 | 111.72 | 91.59 | 1.22 | 91.24 | 1.06 |
| | | 25 | 580 | 1294.46 | 1296.98 | 2.52 | 2.58 | 1297.77 | 1297.76 | 0.01547 | 3.92 | 147.97 | 104.56 | 1.42 | 104.08 | 1.05 |
| | | 50 | 740 | 1294.46 | 1297.23 | 2.77 | 2.84 | 1298.15 | 1298.15 | 0.01492 | 4.25 | 174.16 | 106.13 | 1.64 | 105.56 | 1.06 |
| | | 100 | 930 | 1294.46 | 1297.50 | 3.04 | 3.14 | 1298.57 | 1298.57 | 0.01458 | 4.59 | 202.40 | 107.80 | 1.88 | 107.14 | 1.07 |
| | | 200 | 1180 | 1294.46 | 1297.81 | 3.35 | 3.48 | 1299.08 | 1299.07 | 0.01437 | 5.00 | 236.23 | 109.79 | 2.15 | 109.03 | 1.08 |
| 9 | 800 | 2 | 190 | 1297.00 | 1298.25 | 1.25 | 1.38 | 1298.77 | 1298.74 | 0.02975 | 3.19 | 59.55 | 93.56 | 0.64 | 93.28 | 1.27 |
| | | 5 | 310 | 1297.00 | 1298.50 | 1.50 | 1.68 | 1299.20 | 1299.15 | 0.02802 | 3.69 | 83.98 | 101.37 | 0.83 | 101.08 | 1.29 |
| | | 10 | 410 | 1297.00 | 1298.66 | 1.66 | 1.88 | 1299.51 | 1299.43 | 0.02922 | 4.10 | 99.98 | 106.36 | 0.94 | 106.06 | 1.35 |
| | | 25 | 580 | 1297.00 | 1298.88 | 1.88 | 2.18 | 1299.99 | 1299.85 | 0.03093 | 4.67 | 124.23 | 113.53 | 1.09 | 113.21 | 1.42 |
| | | 50 | 740 | 1297.00 | 1299.05 | 2.05 | 2.43 | 1300.39 | 1300.21 | 0.03215 | 5.13 | 144.31 | 117.94 | 1.22 | 117.60 | 1.48 |
| | | 100 | 930 | 1297.00 | 1299.22 | 2.22 | 2.70 | 1300.85 | 1300.59 | 0.03312 | 5.64 | 164.88 | 119.45 | 1.38 | 119.05 | 1.53 |
| | | 200 | 1180 | 1297.00 | 1299.44 | 2.44 | 3.03 | 1301.39 | 1301.05 | 0.03372 | 6.19 | 190.65 | 121.78 | 1.57 | 121.32 | 1.58 |
| 10 | 900 | 2 | 190 | 1300.00 | 1300.88 | 0.88 | 1.01 | 1301.51 | 1301.49 | 0.02479 | 3.52 | 53.97 | 63.79 | 0.85 | 63.43 | 1.22 |
| | | 5 | 310 | 1300.00 | 1301.13 | 1.13 | 1.40 | 1302.13 | 1302.03 | 0.02890 | 4.43 | 70.00 | 65.81 | 1.06 | 65.37 | 1.37 |
| | | 10 | 410 | 1300.00 | 1301.33 | 1.33 | 1.68 | 1302.57 | 1302.42 | 0.02958 | 4.92 | 83.30 | 68.00 | 1.22 | 67.52 | 1.41 |
| | | 25 | 580 | 1300.00 | 1301.62 | 1.62 | 2.10 | 1303.23 | 1302.99 | 0.03091 | 5.63 | 103.07 | 71.15 | 1.45 | 70.60 | 1.49 |
| | | 50 | 740 | 1300.00 | 1301.84 | 1.84 | 2.47 | 1303.80 | 1303.45 | 0.03239 | 6.20 | 119.38 | 73.84 | 1.62 | 73.23 | 1.55 |
| | | 100 | 930 | 1300.00 | 1302.08 | 2.08 | 2.83 | 1304.42 | 1303.94 | 0.03413 | 6.77 | 137.37 | 77.39 | 1.77 | 76.74 | 1.62 |
| | | 200 | 1180 | 1300.00 | 1302.36 | 2.36 | 3.27 | 1305.16 | 1304.49 | 0.03664 | 7.41 | 159.27 | 82.68 | 1.93 | 81.97 | 1.70 |

Anexo 3
Río Colorado
Cauce Rectificado
(n=0,040)

| | | | | | | | | | | | | | | | | |
|---|---|---|---|---|---|---|---|---|---|---|---|---|---|---|---|---|
| 11 | 1000 | 2 | 190 | 1301.60 | 1302.86 | 1.26 | 1.29 | 1303.50 | 1303.50 | 0.01624 | 3.55 | 53.58 | 45.64 | 1.17 | 45.04 | 1.04 |
| | | 5 | 310 | 1301.60 | 1303.31 | 1.71 | 1.79 | 1304.20 | 1304.19 | 0.01538 | 4.17 | 74.33 | 47.66 | 1.56 | 46.85 | 1.06 |
| | | 10 | 410 | 1301.60 | 1303.59 | 1.99 | 2.13 | 1304.71 | 1304.69 | 0.01610 | 4.68 | 87.62 | 48.91 | 1.79 | 47.97 | 1.11 |
| | | 25 | 580 | 1301.60 | 1304.01 | 2.41 | 2.66 | 1305.48 | 1305.44 | 0.01686 | 5.37 | 108.02 | 50.78 | 2.13 | 49.64 | 1.16 |
| | | 50 | 740 | 1301.60 | 1304.36 | 2.76 | 3.11 | 1306.13 | 1306.06 | 0.01726 | 5.89 | 125.67 | 52.35 | 2.40 | 51.04 | 1.20 |
| | | 100 | 930 | 1301.60 | 1304.74 | 3.14 | 3.59 | 1306.83 | 1306.73 | 0.01753 | 6.40 | 145.29 | 54.04 | 2.69 | 52.56 | 1.23 |
| | | 200 | 1180 | 1301.60 | 1305.19 | 3.59 | 4.15 | 1307.67 | 1307.52 | 0.01786 | 6.98 | 169.11 | 56.03 | 3.02 | 54.34 | 1.26 |
| 12 | 1106.2 | 2 | 190 | 1303.70 | 1304.77 | 1.07 | 1.29 | 1305.67 | 1305.60 | 0.02804 | 4.21 | 45.15 | 44.79 | 1.01 | 44.29 | 1.33 |
| | | 5 | 310 | 1303.70 | 1305.16 | 1.46 | 1.79 | 1306.41 | 1306.29 | 0.02636 | 4.95 | 62.64 | 46.53 | 1.35 | 45.84 | 1.35 |
| | | 10 | 410 | 1303.70 | 1305.44 | 1.74 | 2.13 | 1306.93 | 1306.79 | 0.02528 | 5.41 | 75.83 | 47.80 | 1.59 | 46.98 | 1.36 |
| | | 25 | 580 | 1303.70 | 1305.87 | 2.17 | 2.65 | 1307.72 | 1307.54 | 0.02421 | 6.04 | 96.07 | 49.69 | 1.93 | 48.67 | 1.37 |
| | | 50 | 740 | 1303.70 | 1306.21 | 2.51 | 3.11 | 1308.39 | 1308.16 | 0.02388 | 6.55 | 113.03 | 51.23 | 2.21 | 50.04 | 1.39 |
| | | 100 | 930 | 1303.70 | 1306.57 | 2.87 | 3.59 | 1309.13 | 1308.83 | 0.02384 | 7.08 | 131.31 | 52.84 | 2.49 | 51.48 | 1.42 |
| | | 200 | 1180 | 1303.70 | 1307.00 | 3.30 | 4.15 | 1310.00 | 1309.62 | 0.02380 | 7.68 | 153.74 | 54.75 | 2.81 | 53.20 | 1.44 |
| 13 | 1240.7 | 2 | 190 | 1306.90 | 1308.09 | 1.19 | 1.29 | 1308.81 | 1308.80 | 0.01953 | 3.76 | 50.57 | 45.34 | 1.12 | 44.77 | 1.13 |
| | | 5 | 310 | 1306.90 | 1308.47 | 1.57 | 1.79 | 1309.54 | 1309.50 | 0.02048 | 4.57 | 67.86 | 47.03 | 1.44 | 46.29 | 1.20 |
| | | 10 | 410 | 1306.90 | 1308.73 | 1.83 | 2.13 | 1310.07 | 1309.99 | 0.02143 | 5.13 | 79.94 | 48.19 | 1.66 | 47.32 | 1.26 |
| | | 25 | 580 | 1306.90 | 1309.10 | 2.20 | 2.65 | 1310.89 | 1310.74 | 0.02286 | 5.93 | 97.87 | 49.86 | 1.96 | 48.82 | 1.34 |
| | | 50 | 740 | 1306.90 | 1309.42 | 2.52 | 3.11 | 1311.58 | 1311.36 | 0.02350 | 6.51 | 113.62 | 51.28 | 2.22 | 50.09 | 1.38 |
| | | 100 | 930 | 1306.90 | 1309.77 | 2.87 | 3.59 | 1312.32 | 1312.03 | 0.02375 | 7.07 | 131.47 | 52.85 | 2.49 | 51.50 | 1.41 |
| | | 200 | 1180 | 1306.90 | 1310.20 | 3.30 | 4.15 | 1313.20 | 1312.82 | 0.02378 | 7.67 | 153.78 | 54.76 | 2.81 | 53.20 | 1.44 |
| 14 | 1345.8 | 2 | 190 | 1309.40 | 1310.45 | 1.05 | 1.29 | 1311.39 | 1311.30 | 0.02990 | 4.29 | 44.25 | 44.70 | 0.99 | 44.20 | 1.37 |
| | | 5 | 310 | 1309.40 | 1310.83 | 1.43 | 1.79 | 1312.14 | 1312.00 | 0.02860 | 5.08 | 61.04 | 46.37 | 1.32 | 45.70 | 1.40 |
| | | 10 | 410 | 1309.40 | 1311.11 | 1.71 | 2.13 | 1312.67 | 1312.49 | 0.02718 | 5.53 | 74.10 | 47.63 | 1.56 | 46.83 | 1.40 |
| | | 25 | 580 | 1309.40 | 1311.55 | 2.15 | 2.66 | 1313.45 | 1313.24 | 0.02509 | 6.11 | 94.98 | 49.59 | 1.92 | 48.58 | 1.39 |
| | | 50 | 740 | 1309.40 | 1311.90 | 2.50 | 3.11 | 1314.10 | 1313.86 | 0.02421 | 6.58 | 112.52 | 51.18 | 2.20 | 50.00 | 1.40 |
| | | 100 | 930 | 1309.40 | 1312.27 | 2.87 | 3.59 | 1314.83 | 1314.53 | 0.02382 | 7.08 | 131.36 | 52.84 | 2.49 | 51.49 | 1.41 |
| | | 200 | 1180 | 1309.40 | 1312.71 | 3.31 | 4.15 | 1315.69 | 1315.32 | 0.02352 | 7.65 | 154.34 | 54.81 | 2.82 | 53.24 | 1.43 |
| 15 | 1425.6 | 2 | 190 | 1311.30 | 1312.54 | 1.24 | 1.29 | 1313.20 | 1313.20 | 0.01740 | 3.62 | 52.44 | 45.52 | 1.15 | 44.94 | 1.07 |
| | | 5 | 310 | 1311.30 | 1312.96 | 1.66 | 1.79 | 1313.91 | 1313.90 | 0.01702 | 4.31 | 71.98 | 47.43 | 1.52 | 46.65 | 1.11 |
| | | 10 | 410 | 1311.30 | 1313.25 | 1.95 | 2.13 | 1314.42 | 1314.39 | 0.01741 | 4.80 | 85.45 | 48.71 | 1.75 | 47.79 | 1.15 |
| | | 25 | 580 | 1311.30 | 1313.62 | 2.32 | 2.66 | 1315.22 | 1315.14 | 0.01919 | 5.60 | 103.57 | 50.38 | 2.06 | 49.28 | 1.23 |
| | | 50 | 740 | 1311.30 | 1313.93 | 2.63 | 3.11 | 1315.90 | 1315.76 | 0.02047 | 6.23 | 118.84 | 51.75 | 2.30 | 50.51 | 1.30 |
| | | 100 | 930 | 1311.30 | 1314.28 | 2.98 | 3.59 | 1316.63 | 1316.43 | 0.02100 | 6.79 | 136.90 | 53.32 | 2.57 | 51.92 | 1.34 |
| | | 200 | 1180 | 1311.30 | 1314.72 | 3.42 | 4.15 | 1317.48 | 1317.22 | 0.02102 | 7.37 | 160.19 | 55.29 | 2.90 | 53.68 | 1.36 |

Anexo 3
Río Colorado
Cauce Rectificado
(n=0,040)

| | | | | | | | | | | | | | | | | |
|---|---|---|---|---|---|---|---|---|---|---|---|---|---|---|---|---|
| 16 | 1525.6 | 2 | 190 | 1313.40 | 1314.50 | 1.10 | 1.29 | 1315.35 | 1315.30 | 0.02568 | 4.09 | 46.41 | 44.92 | 1.03 | 44.40 | 1.28 |
| | | 5 | 310 | 1313.40 | 1314.85 | 1.45 | 1.79 | 1316.11 | 1315.99 | 0.02683 | 4.98 | 62.29 | 46.49 | 1.34 | 45.81 | 1.36 |
| | | 10 | 410 | 1313.40 | 1315.12 | 1.72 | 2.13 | 1316.66 | 1316.49 | 0.02656 | 5.49 | 74.64 | 47.68 | 1.57 | 46.87 | 1.39 |
| | | 25 | 580 | 1313.40 | 1315.58 | 2.18 | 2.66 | 1317.41 | 1317.24 | 0.02356 | 5.98 | 96.92 | 49.77 | 1.95 | 48.74 | 1.35 |
| | | 50 | 740 | 1313.40 | 1315.98 | 2.58 | 3.11 | 1318.04 | 1317.86 | 0.02178 | 6.35 | 116.47 | 51.53 | 2.26 | 50.32 | 1.33 |
| | | 100 | 930 | 1313.40 | 1316.39 | 2.99 | 3.59 | 1318.72 | 1318.53 | 0.02070 | 6.76 | 137.56 | 53.38 | 2.58 | 51.97 | 1.33 |
| | | 200 | 1180 | 1313.40 | 1316.87 | 3.47 | 4.15 | 1319.55 | 1319.32 | 0.02006 | 7.25 | 162.71 | 55.50 | 2.93 | 53.87 | 1.33 |
| 17 | 1625.6 | 2 | 190 | 1315.40 | 1316.69 | 1.29 | 1.29 | 1317.30 | 1317.30 | 0.01490 | 3.45 | 55.06 | 45.78 | 1.20 | 45.17 | 1.00 |
| | | 5 | 310 | 1315.40 | 1317.19 | 1.79 | 1.79 | 1318.00 | 1318.00 | 0.01335 | 3.99 | 77.77 | 47.98 | 1.62 | 47.14 | 0.99 |
| | | 10 | 410 | 1315.40 | 1317.53 | 2.13 | 2.13 | 1318.49 | 1318.49 | 0.01278 | 4.34 | 94.40 | 49.54 | 1.91 | 48.53 | 0.99 |
| | | 25 | 580 | 1315.40 | 1317.95 | 2.55 | 2.66 | 1319.25 | 1319.24 | 0.01397 | 5.05 | 114.84 | 51.39 | 2.23 | 50.19 | 1.07 |
| | | 50 | 740 | 1315.40 | 1318.26 | 2.86 | 3.11 | 1319.89 | 1319.86 | 0.01533 | 5.66 | 130.66 | 52.78 | 2.48 | 51.43 | 1.13 |
| | | 100 | 930 | 1315.40 | 1318.58 | 3.18 | 3.59 | 1320.61 | 1320.53 | 0.01682 | 6.31 | 147.32 | 54.21 | 2.72 | 52.71 | 1.21 |
| | | 200 | 1180 | 1315.40 | 1318.94 | 3.54 | 4.15 | 1321.49 | 1321.32 | 0.01864 | 7.08 | 166.73 | 55.84 | 2.99 | 54.17 | 1.29 |
| 18 | 1725.6 | 2 | 190 | 1317.40 | 1318.26 | 0.86 | 1.29 | 1319.70 | 1319.30 | 0.05967 | 5.32 | 35.68 | 43.83 | 0.81 | 43.42 | 1.87 |
| | | 5 | 310 | 1317.40 | 1318.52 | 1.12 | 1.79 | 1320.72 | 1320.00 | 0.06496 | 6.57 | 47.15 | 44.99 | 1.05 | 44.47 | 2.04 |
| | | 10 | 410 | 1317.40 | 1318.72 | 1.32 | 2.13 | 1321.44 | 1320.49 | 0.06542 | 7.31 | 56.09 | 45.88 | 1.22 | 45.26 | 2.10 |
| | | 25 | 580 | 1317.40 | 1319.02 | 1.62 | 2.66 | 1322.50 | 1321.24 | 0.06434 | 8.26 | 70.24 | 47.26 | 1.49 | 46.50 | 2.14 |
| | | 50 | 740 | 1317.40 | 1319.28 | 1.88 | 3.11 | 1323.39 | 1321.86 | 0.06344 | 8.98 | 82.43 | 48.42 | 1.70 | 47.53 | 2.18 |
| | | 100 | 930 | 1317.40 | 1319.56 | 2.16 | 3.59 | 1324.35 | 1322.53 | 0.06255 | 9.70 | 95.92 | 49.68 | 1.93 | 48.66 | 2.20 |
| | | 200 | 1180 | 1317.40 | 1319.89 | 2.49 | 4.15 | 1325.53 | 1323.32 | 0.06217 | 10.52 | 112.16 | 51.15 | 2.19 | 49.97 | 2.24 |
| 19 | 1784.7 | 2 | 190 | 1318.00 | 1320.34 | 2.34 | 2.34 | 1321.26 | 1321.26 | 0.01400 | 4.24 | 44.85 | 26.16 | 1.71 | 24.33 | 1.00 |
| | | 5 | 310 | 1318.00 | 1321.09 | 3.09 | 3.09 | 1322.30 | 1322.30 | 0.01319 | 4.87 | 63.70 | 28.87 | 2.21 | 26.13 | 0.99 |
| | | 10 | 410 | 1318.00 | 1321.63 | 3.63 | 3.63 | 1323.03 | 1323.03 | 0.01284 | 5.23 | 78.37 | 31.22 | 2.51 | 27.86 | 1.00 |
| | | 25 | 580 | 1318.00 | 1322.39 | 4.39 | 4.39 | 1324.10 | 1324.10 | 0.01254 | 5.80 | 100.04 | 33.56 | 2.98 | 28.94 | 1.00 |
| | | 50 | 740 | 1318.00 | 1323.00 | 5.00 | 5.00 | 1325.01 | 1325.01 | 0.01247 | 6.29 | 117.64 | 34.77 | 3.38 | 28.94 | 1.00 |
| | | 100 | 930 | 1318.00 | 1323.65 | 5.65 | 5.65 | 1326.01 | 1326.01 | 0.01259 | 6.81 | 136.52 | 36.08 | 3.78 | 28.94 | 1.00 |
| | | 200 | 1180 | 1318.00 | 1324.48 | 6.48 | 6.48 | 1327.23 | 1327.23 | 0.01251 | 7.34 | 160.66 | 37.75 | 4.26 | 28.94 | 1.00 |
| 20 | 1793.2 | 2 | 190 | 1318.20 | 1320.62 | 2.42 | 2.33 | 1321.38 | 1321.38 | 0.01163 | 3.86 | 49.21 | 28.70 | 1.71 | 27.75 | 0.93 |
| | | 5 | 310 | 1318.20 | 1321.60 | 3.40 | 3.01 | 1322.42 | 1322.34 | 0.00777 | 4.02 | 77.18 | 31.35 | 2.46 | 28.94 | 0.79 |
| | | 10 | 410 | 1318.20 | 1322.19 | 3.99 | 3.48 | 1323.15 | 1323.03 | 0.00734 | 4.35 | 94.21 | 32.52 | 2.90 | 28.94 | 0.77 |
| | | 25 | 580 | 1318.20 | 1322.98 | 4.78 | 4.18 | 1324.23 | 1324.10 | 0.00755 | 4.95 | 117.27 | 34.12 | 3.44 | 28.94 | 0.78 |
| | | 50 | 740 | 1318.20 | 1323.66 | 5.46 | 4.79 | 1325.15 | 1325.01 | 0.00775 | 5.41 | 136.72 | 35.46 | 3.86 | 28.94 | 0.79 |
| | | 100 | 930 | 1318.20 | 1324.40 | 6.20 | 5.46 | 1326.16 | 1326.01 | 0.00795 | 5.88 | 158.20 | 36.95 | 4.28 | 28.94 | 0.80 |
| | | 200 | 1180 | 1318.20 | 1325.28 | 7.08 | 6.28 | 1327.38 | 1327.23 | 0.00826 | 6.42 | 183.84 | 38.72 | 4.75 | 28.94 | 0.81 |

Anexo 3
Río Colorado
Cauce Rectificado
(n=0,040)

| | | | | | | | | | | | | | | | | |
|---|---|---|---|---|---|---|---|---|---|---|---|---|---|---|---|---|
| 21 | 1824.8 | 2 | 190 | 1318.96 | 1321.11 | 2.15 | 1.92 | 1321.73 | 1321.69 | 0.00928 | 3.46 | 54.87 | 31.83 | 1.72 | 30.91 | 0.83 |
| | | 5 | 310 | 1318.96 | 1321.94 | 2.98 | 2.58 | 1322.67 | 1322.59 | 0.00756 | 3.78 | 81.95 | 35.71 | 2.30 | 34.41 | 0.78 |
| | | 10 | 410 | 1318.96 | 1322.65 | 3.69 | 3.06 | 1323.39 | 1323.22 | 0.00615 | 3.81 | 107.74 | 39.83 | 2.71 | 38.23 | 0.72 |
| | | 25 | 580 | 1318.96 | 1323.72 | 4.76 | 3.76 | 1324.47 | 1324.12 | 0.00476 | 3.83 | 151.51 | 45.79 | 3.31 | 43.76 | 0.66 |
| | | 50 | 740 | 1318.96 | 1324.65 | 5.69 | 4.32 | 1325.39 | 1324.86 | 0.00385 | 3.80 | 194.62 | 50.73 | 3.84 | 48.32 | 0.60 |
| | | 100 | 930 | 1318.96 | 1325.73 | 6.77 | 4.92 | 1326.40 | 1325.63 | 0.00275 | 3.36 | 276.84 | 96.03 | 2.88 | 93.22 | 0.62 |
| | | 200 | 1180 | 1318.96 | 1327.14 | 8.18 | 5.60 | 1327.64 | 1326.52 | 0.00163 | 2.61 | 452.38 | 167.67 | 2.70 | 164.60 | 0.50 |
| 22 | 1924.8 | 2 | 190 | 1320.80 | 1322.60 | 1.80 | 2.07 | 1323.77 | 1323.69 | 0.02309 | 4.80 | 39.62 | 27.93 | 1.42 | 27.27 | 1.27 |
| | | 5 | 310 | 1320.80 | 1323.19 | 2.39 | 2.77 | 1324.71 | 1324.61 | 0.02148 | 5.45 | 56.83 | 31.29 | 1.82 | 30.41 | 1.27 |
| | | 10 | 410 | 1320.80 | 1323.69 | 2.89 | 3.37 | 1325.31 | 1325.23 | 0.01897 | 5.64 | 72.64 | 34.61 | 2.10 | 33.58 | 1.22 |
| | | 25 | 580 | 1320.80 | 1324.29 | 3.49 | 4.07 | 1326.18 | 1325.99 | 0.01723 | 5.79 | 100.25 | 59.46 | 1.69 | 58.25 | 1.41 |
| | | 50 | 740 | 1320.80 | 1324.68 | 3.88 | 4.54 | 1326.84 | 1326.56 | 0.01749 | 6.02 | 123.00 | 64.06 | 1.92 | 62.73 | 1.37 |
| | | 100 | 930 | 1320.80 | 1325.03 | 4.23 | 5.02 | 1327.52 | 1327.15 | 0.01827 | 6.31 | 147.43 | 73.01 | 2.02 | 71.46 | 1.40 |
| | | 200 | 1180 | 1320.80 | 1327.16 | 6.36 | 5.65 | 1327.98 | 1327.79 | 0.00359 | 3.34 | 353.36 | 112.55 | 3.14 | 109.56 | 0.59 |
| 23 | 2024.8 | 2 | 190 | 1322.90 | 1324.80 | 1.90 | 2.31 | 1326.12 | 1325.94 | 0.02436 | 4.59 | 41.41 | 38.23 | 1.08 | 36.73 | 1.38 |
| | | 5 | 310 | 1322.90 | 1325.27 | 2.37 | 2.95 | 1327.08 | 1326.60 | 0.02678 | 5.01 | 61.85 | 57.10 | 1.08 | 55.23 | 1.51 |
| | | 10 | 410 | 1322.90 | 1325.49 | 2.59 | 3.29 | 1327.69 | 1327.06 | 0.03027 | 5.53 | 74.17 | 57.82 | 1.28 | 55.80 | 1.53 |
| | | 25 | 580 | 1322.90 | 1325.80 | 2.90 | 3.76 | 1328.62 | 1327.74 | 0.03514 | 6.33 | 91.57 | 58.84 | 1.56 | 56.60 | 1.59 |
| | | 50 | 740 | 1322.90 | 1326.06 | 3.16 | 4.14 | 1329.38 | 1328.31 | 0.03844 | 6.98 | 106.09 | 59.70 | 1.78 | 57.29 | 1.64 |
| | | 100 | 930 | 1322.90 | 1326.32 | 3.42 | 4.58 | 1330.22 | 1328.94 | 0.04204 | 7.67 | 121.33 | 60.72 | 2.00 | 58.14 | 1.69 |
| | | 200 | 1180 | 1322.90 | 1326.62 | 3.72 | 5.17 | 1331.26 | 1329.69 | 0.04599 | 8.48 | 139.19 | 61.86 | 2.25 | 59.08 | 1.76 |
| 24 | 2124.8 | 2 | 190 | 1324.70 | 1327.03 | 2.33 | 2.32 | 1327.93 | 1327.93 | 0.01343 | 4.22 | 44.98 | 25.56 | 1.76 | 24.51 | 1.00 |
| | | 5 | 310 | 1324.70 | 1327.80 | 3.10 | 3.10 | 1328.94 | 1328.94 | 0.01265 | 4.73 | 65.57 | 30.07 | 2.18 | 28.66 | 1.00 |
| | | 10 | 410 | 1324.70 | 1328.31 | 3.61 | 3.61 | 1329.62 | 1329.62 | 0.01214 | 5.08 | 80.78 | 32.30 | 2.50 | 30.56 | 1.00 |
| | | 25 | 580 | 1324.70 | 1329.05 | 4.35 | 4.35 | 1330.63 | 1330.63 | 0.01149 | 5.58 | 103.95 | 34.60 | 3.00 | 32.31 | 0.99 |
| | | 50 | 740 | 1324.70 | 1329.65 | 4.95 | 4.95 | 1331.47 | 1331.47 | 0.01121 | 5.97 | 123.99 | 36.63 | 3.38 | 33.93 | 1.00 |
| | | 100 | 930 | 1324.70 | 1330.32 | 5.62 | 5.62 | 1332.35 | 1332.35 | 0.01072 | 6.31 | 147.43 | 40.30 | 3.66 | 37.12 | 1.01 |
| | | 200 | 1180 | 1324.70 | 1331.06 | 6.36 | 6.36 | 1333.39 | 1333.39 | 0.00991 | 6.66 | 177.11 | 46.96 | 3.77 | 43.29 | 1.05 |
| 25 | 2224.8 | 2 | 190 | 1326.10 | 1328.75 | 2.65 | 2.50 | 1329.19 | 1329.17 | 0.01100 | 2.94 | 64.54 | 54.25 | 1.19 | 53.63 | 0.86 |
| | | 5 | 310 | 1326.10 | 1329.48 | 3.38 | 2.99 | 1329.90 | 1329.79 | 0.00663 | 2.89 | 107.17 | 63.30 | 1.69 | 62.52 | 0.71 |
| | | 10 | 410 | 1326.10 | 1330.03 | 3.93 | 3.30 | 1330.45 | 1330.22 | 0.00493 | 2.86 | 143.38 | 68.99 | 2.08 | 68.10 | 0.63 |
| | | 25 | 580 | 1326.10 | 1330.94 | 4.84 | 3.76 | 1331.32 | 1330.85 | 0.00340 | 2.76 | 210.41 | 80.88 | 2.60 | 79.84 | 0.54 |
| | | 50 | 740 | 1326.10 | 1331.71 | 5.61 | 4.14 | 1332.08 | 1331.36 | 0.00253 | 2.69 | 274.69 | 87.70 | 3.13 | 86.40 | 0.48 |
| | | 100 | 930 | 1326.10 | 1332.55 | 6.45 | 4.57 | 1332.91 | 1331.90 | 0.00199 | 2.65 | 350.42 | 95.62 | 3.66 | 94.05 | 0.44 |
| | | 200 | 1180 | 1326.10 | 1333.55 | 7.45 | 5.05 | 1333.90 | 1332.52 | 0.00154 | 2.63 | 449.03 | 103.87 | 4.32 | 101.97 | 0.40 |

# PROYECTO HIDROELECTRICO ALTO MAIPO

# BASIC ENGINEERING

CONTRACT AM-CO304

**ALFALFAL II POWER PLANT**
**AUCAYES STREAM HYDRAULIC AXIS**
**AUCAYES BRIDGE**

| | | | | | | | |
|---|---|---|---|---|---|---|---|
| | | | | | | | |
| A | 17-12-07 | Information | R. Saraiva | A. Ugarte / H. Mery | E. Woolvett | R. Bennewitz / A. Lyngra | P. Alvarado |
| ISSUED | DATE | PURPOSE OF ISSUE | PREPARED BY | REVIEWED BY | APPROVED BY General Coordinator | APPROVED BY Project D. Asst D. | APPROVED BY AES GENER Project Lead |

CONSULTANTS

**REVISION**

A

**No. 020-HI-INF-016**

# TABLE OF CONTENTS


| ITEM | CONTENTS | PAGE |
|---|---|---|
| 1. | INTRODUCTION | 1 |
| 2. | PURPOSE AND SCOPES | 2 |
| 3. | CALCULATION BASES | 3 |
| 3.1 | Hydraulic Axis on Natural Channels | 3 |
| 3.2 | Flood Flows | 5 |
| 3.3 | Channel cross sections | 5 |
| 3.4 | Roughness Coefficient | 7 |
| 3.5 | Border Conditions | 9 |
| 4. | RESULTS | 10 |
| 4.1 | Hydraulic Axis in a Natural (No Bridge) Situation | 10 |
| 4.2 | Hydraulic Axis in the Future (with Bridge) Situation | 14 |
| 5. | CONCLUSIONS | 15 |

ANNEX 1: Hydraulic Axis, No Bridge Situation

# 1. INTRODUCTION

The works of the El Alfalfal II Power Plant envisage catching water from the upper basin of the El Volcán River through four water intakes (El Morado, Las Placas, Colina and La Engorda), and conveying it through a tunnel (El Volcán tunnel) up to an intake well located on the south bank of the El Yeso River. This intake well also receives the river flow captured downstream of the El Yeso Reservoir, which added to that captured from the basin of El Volcán River, is conveyed through a series of pipes until it enters the beginning of the high pressure hydraulic circuit of the power plant. Figure 1.1 shows a diagram of the works of the power plant.

For the construction of the power plant tailrace tunnel, an access road to the construction window VA-1 has been planned; the road is to cross the Aucayes Stream by a 40 m long 5 m wide bridge (see drawing 20-CA-PLA-025).

.

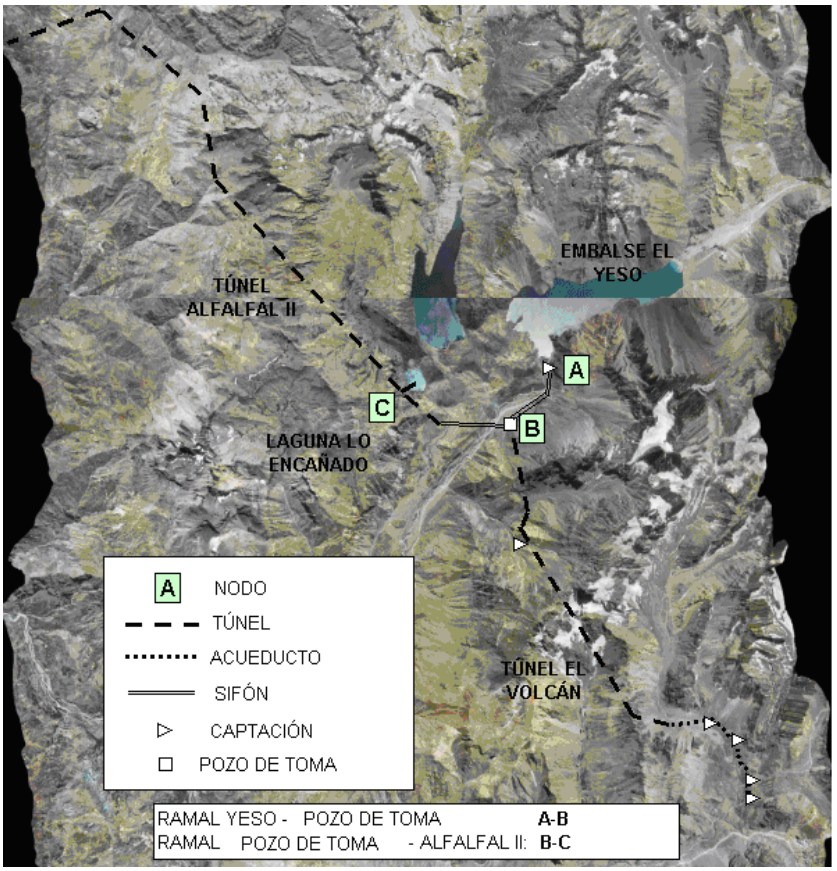


Figure 1.1: General diagram of the works of the El Alfalfal II Power Plant

## 2. PURPOSE AND SCOPES

The purpose of this report is to present the results obtained from the calculation of the Aucayes Stream hydraulic axis, some 4 km upstream of the junction point with the Colorado River, at the location where the Aucayes Bridge (access VA-1) is to be built. The hydraulic levels will help to define the minimum elevation of the bridge platform, as well as whether the bridge has any influence on the hydraulic axis of the channel under natural and flood conditions.

# 3. CALCULATION BASES

## 3.1 Hydraulic Axis on Natural Channels

The calculation of the hydraulic axis on a river (non-prismatic channel) is the determination of the free surface along the channel based on its characteristics, e.g. geometrical features, riverbed and river bank roughness, and flow rates.

The Aucayes Stream hydraulic axis has been calculated using the U.S Army Corps of Engineers' software program called HEC-RAS 3.1.3 (2005), which solves the energy balance equation (Ec. 3.1.1) by means of the standard step method.

$$h_2 + Z_2 + \frac{\alpha_2 V_2^2}{2g} = h_1 + Z_1 + \frac{\alpha_1 V_1^2}{2g} + h_e \qquad \text{(Ec.3.1.1)}$$

Where:

| | | |
|---|---|---|
| $h_i$ | : | Height in section i |
| $Z_i$ | : | Bottom level in section i |
| $\alpha_i$ | : | Coriolis coefficient in section i |
| $V_i$ | : | Velocity in section i |
| he | : | Head loss |

In this case, the water level in a section "i" is $Z_{hi}$:

$$Z_{hi} = h_i + Z_i \qquad \text{(Ec.3.1.2)}$$

The head loss ($h_e$) between two sections is the loss by friction plus the loss by contraction or expansion (singular losses). The head loss equation is as follows:

$$h_e = \langle J \rangle \cdot L + C \cdot \left| \frac{\alpha_2 V_2^2}{2g} - \frac{\alpha_1 V_1^2}{2g} \right| \qquad \text{(Ec.3.1.3)}$$

Where:

<J> : Head loss slope between the two cross sections

L : Distance between cross sections
$\alpha_i$ : Coriolis coefficient in section i
$V_i$ : Velocity in section i
C : Contraction or expansion head loss coefficient

Contraction and expansion coefficients depend on the nature of the transition. In general terms, transitions or geometric changes along a natural channel are gradual; therefore, no high head losses are incurred. According to the literature, an expansion coefficient of 0.3 and a contraction coefficient of 0.1 are recommended for gradual transitions. In the case of contractions caused by structures such as bridges and sewers, the recommended coefficients for expansion and contraction are 0.5 and 0.3, respectively.

For the calculation of frictional losses, the program uses the method called “Average Conveyance Equation”. It is expressed by the following equation:

$$< J > = \left( \frac{2Q}{K_1 + K_2} \right)^2 \qquad \text{(Ec.3.1.4)}$$

$$K = \frac{A \cdot R^{2/3}}{n} \qquad \text{(Ec.3.1.5)}$$

Where:

$K_i$ : Conveyance coefficient in section i
R: : Hydraulic radius
n : Manning’s roughness coefficient

The head loss slope in each section is calculated using Manning’s equation.

$$Q = \frac{\sqrt{J}}{n} \cdot R^{2/3} \cdot A = \sqrt{J} \cdot K \qquad \text{(Ec.3.1.6)}$$

## 3.2 Flood Flows

The flow rates used for calculating the hydraulic axis were obtained from the flood studies carried out within the framework of the PHAM hydrological studies. Table 3.2.1 shows the flood flows for the zone under study, for various return periods.

Table 3.2.1: Flood flows in the Aucayes Stream where it meets the Colorado River

| Tr (years) | Flow Rate ($m^3/s$) |
|---|---|
| 2 | 15 |
| 5 | 30 |
| 10 | 45 |
| 25 | 70 |
| 50 | 90 |
| 100 | 115 |
| 200 | 145 |

## 3.3 Channel cross sections

Based on the 1:1,000 scale topographical mapping made by Geoexploraciones (2006) for the project, twenty-two (22) cross section profiles along each channel have been obtained for the zone where the bridge will be located. The hydraulic study considered an overall length of approximately 400 m, of which 200 m are upstream and 200 m are downstream of the bridge.

Figure 3.3.1 shows the cross section profiles considered in the calculation of hydraulic axes.

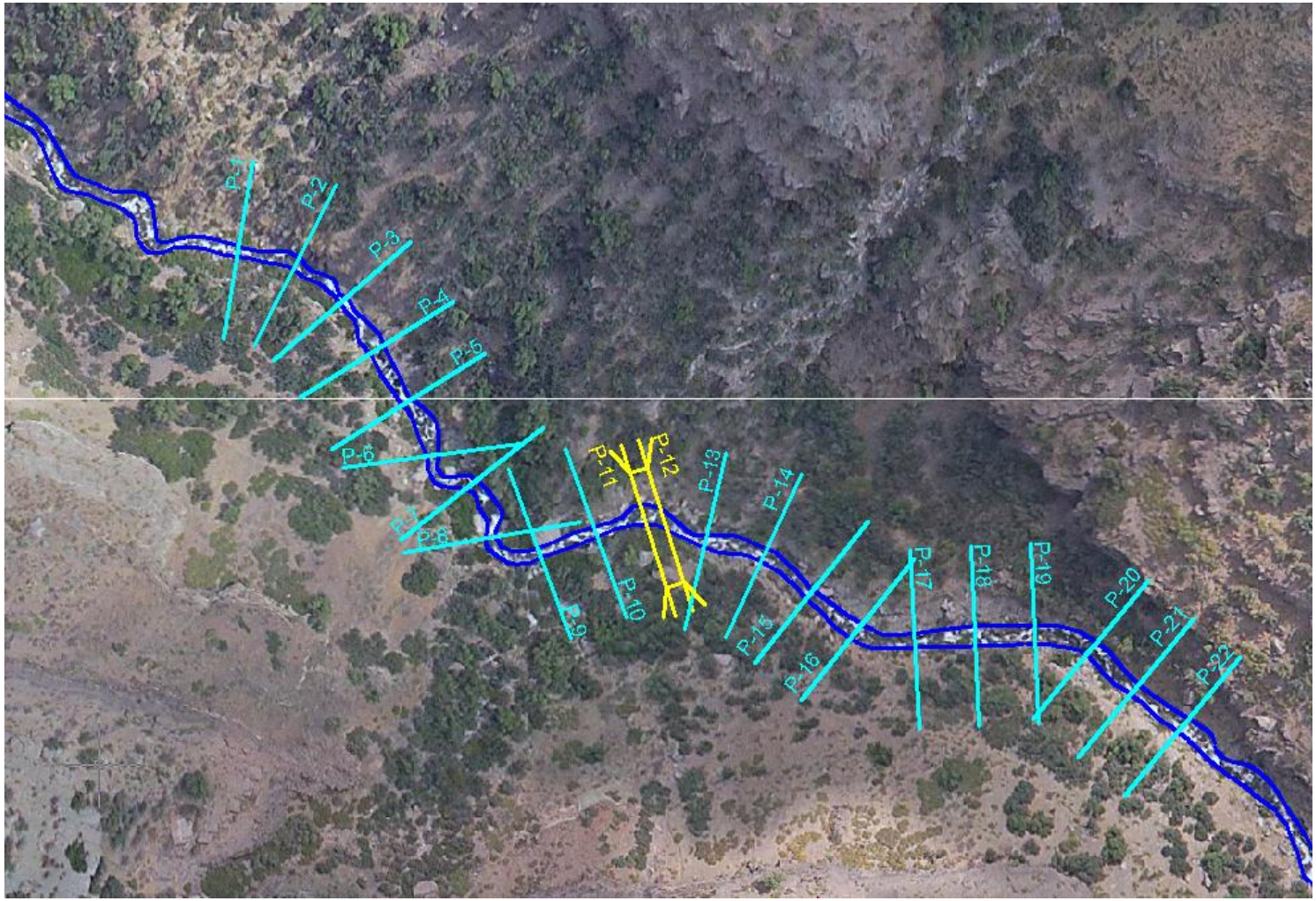


Figure 3.3.1: Location of cross section profiles for the bridge over the Aucayes Stream (Aucayes Bridge)

## 3.4 Roughness Coefficient

In the stretch under study, the Aucayes Stream exhibits a granular bed with gross grain size characteristics, together with the presence of some large boulders, and a well-defined main channel. Figures 3.4.1 and 3.4.2 are photographs of the river in the zone under study.

Cowan's method for determining the roughness coefficient was used to estimate the roughness of the river channel and of the flood zones on the river banks. The expression to determine Manning's coefficient is as follows:

$$n = (n_0 + n_0 + n_0 + n_0) \cdot m_5 \qquad \text{(Ec.3.4.1)}$$

Where:

| | | |
|---|---|---|
| $n_0$ | : | Base roughness coefficient for a straight, uniform and smooth channel |
| $n_1$ | : | Degree of irregularity in the section |
| $n_2$ | : | Variation in the cross section |
| $n_3$ | : | Effect of obstructions |
| $n_4$ | : | Presence of vegetation |
| $m_5$ | : | Correction factor for meandering |

The results obtained are shown in the following table:

Table 3.4.1: Aucayes Stream roughness coefficients according to Cowan's method.

| Coefficient | Right Bank | Main Channel | Left Bank |
|---|---|---|---|
| $n_0$ | 0.028 | 0.028 | 0.028 |
| $n_1$ | 0.010 | 0.005 | 0.010 |
| $n_2$ | 0.005 | 0.005 | 0.005 |
| $n_3$ | 0.0005 | 0.000 | 0.005 |
| $n_4$ | 0.005 | 0.005 | 0.005 |
| $m_5$ | 1.000 | 1.000 | 1.000 |
| n | 0.053 | 0.043 | 0.053 |

Finally, a value of n=0.045 was used for the main channel and of n=0.055 for the channel's secondary flows, in case runoff reaches them.

Figure 3.4.1: Aerial photograph of the Aucayes Stream.

Figure 3.4.2: A view to the Aucayes Stream.

## 3.5 Border Conditions

To calculate the hydraulic axis, in addition to geometrical and flow rate data, border conditions should be established according to the hydraulic controls existing in the channel under analysis.

In the event of a river runoff, the border condition is set from downstream upwards, while a torrent flow is conditioned from upstream downwards.

A mixed runoff has been assumed in this analysis, which means that two border conditions –one upstream and one downstream– are required. The condition inputted in the HEC-RAS in both cases was the normal runoff elevation, the calculation of which requires that slope data be fed into the software.

# 4. RESULTS

## 4.1 Hydraulic Axis in a Natural (No Bridge) Situation

Figure 4.1.1 shows a longitudinal profile with the results obtained from the Aucayes Stream hydraulic axis in the zone where the access bridge to window VA-1 will be located, for a flow rate equivalent to Tr=100 years. Detailed results are shown in Annex 1.

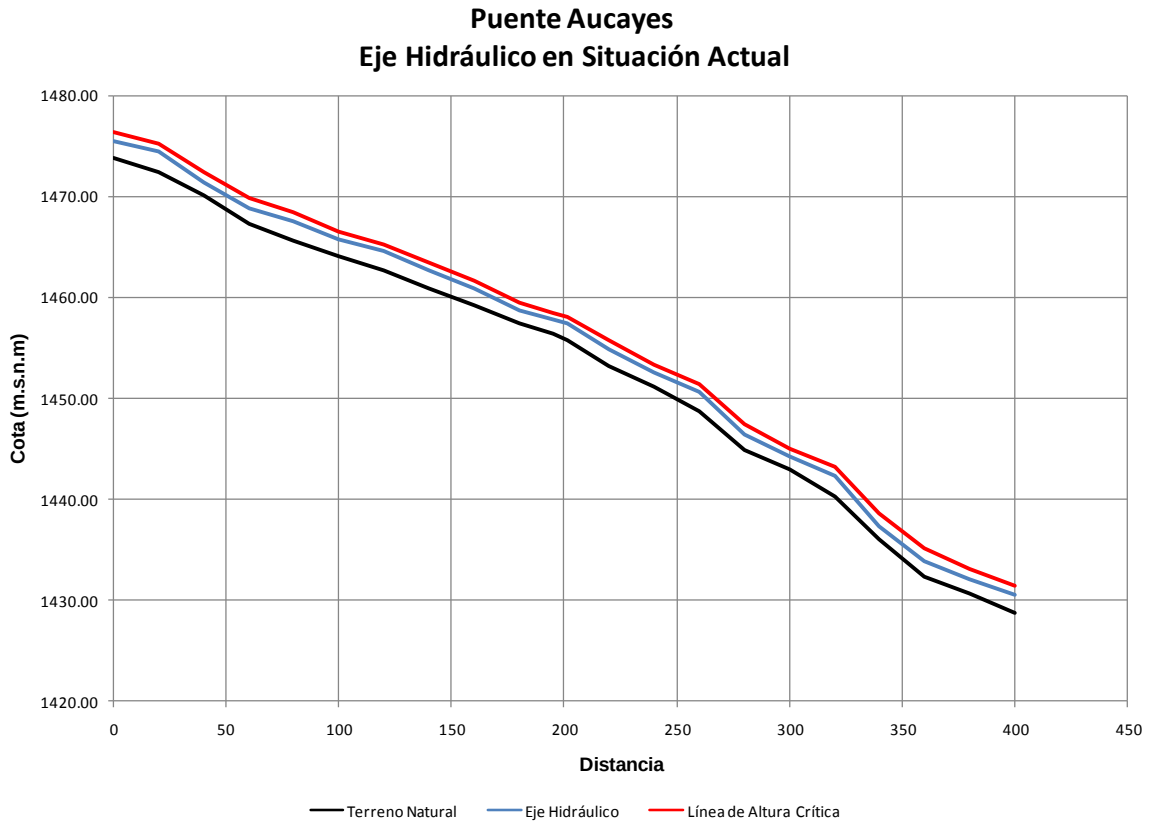


Figure 4.1.1: Aucayes Stream hydraulic axis. No bridge situation.

The Aucayes Stream runoff system in the stretch under analysis is equivalent to torrent conditions, with Froude numbers very close to 1.

Table 4.1.1 summarizes runoff levels and elevations in the stretch under analysis. It may be seen in Figure 3.3.1 that the bridge would be located between profiles 11 and 12, where the hydraulic axis reaches a maximum elevation of 1,457.87 masl.

According to the project's design standards, the bridge platform should be placed one meter above the maximum level of the hydraulic axis, that is, at an elevation of 1,458.9 masl.

Table 4.1.1: Results for Tr=100 years

| Profile | X (m) | Z H (masl) | H (m) | Critical Z H (masl) | Critical H (m) |
|---|---|---|---|---|---|
| 1 | 400 | 1430.60 | 1.84 | 1431.41 | 2.65 |
| 2 | 380 | 1432.16 | 1.50 | 1433.10 | 2.44 |
| 3 | 360 | 1433.93 | 1.63 | 1435.09 | 2.79 |
| 4 | 340 | 1437.44 | 1.34 | 1438.62 | 2.52 |
| 5 | 320 | 1442.37 | 2.07 | 1443.20 | 2.90 |
| 6 | 300 | 1444.29 | 1.29 | 1445.03 | 2.03 |
| 7 | 280 | 1446.44 | 1.54 | 1447.44 | 2.54 |
| 8 | 260 | 1450.64 | 1.88 | 1451.45 | 2.69 |
| 9 | 240 | 1452.63 | 1.43 | 1453.35 | 2.15 |
| 10 | 220 | 1454.93 | 1.64 | 1455.72 | 2.43 |
| **11** | **201.3** | **1457.51** | **1.76** | **1458.06** | **2.31** |
| **12** | **195.3** | **1457.87** | **1.47** | **1458.46** | **2.06** |
| 13 | 180 | 1458.79 | 1.35 | 1459.56 | 2.12 |
| 14 | 160 | 1460.92 | 1.63 | 1461.71 | 2.42 |
| 15 | 140 | 1462.78 | 1.88 | 1463.52 | 2.62 |
| 16 | 120 | 1464.68 | 2.02 | 1465.27 | 2.61 |
| 17 | 100 | 1465.79 | 1.63 | 1466.52 | 2.36 |
| 18 | 80 | 1467.65 | 1.98 | 1468.43 | 2.76 |
| 19 | 60 | 1468.93 | 1.56 | 1469.88 | 2.51 |
| 20 | 40 | 1471.48 | 1.38 | 1472.39 | 2.29 |
| 21 | 20 | 1474.49 | 2.04 | 1475.22 | 2.77 |
| 22 | 0 | 1475.54 | 1.68 | 1476.43 | 2.57 |

Figures 4.1.2 and 4.1.3 show the results for profiles 11 and 12 corresponding to sections located immediately upstream and downstream of the bridge platform. Finally, figures 4.1.4 and 4.1.5 show the hydraulic axis in the sections located 20 m upstream and 20 m downstream of the bridge (profiles 10 and 13, respectively).

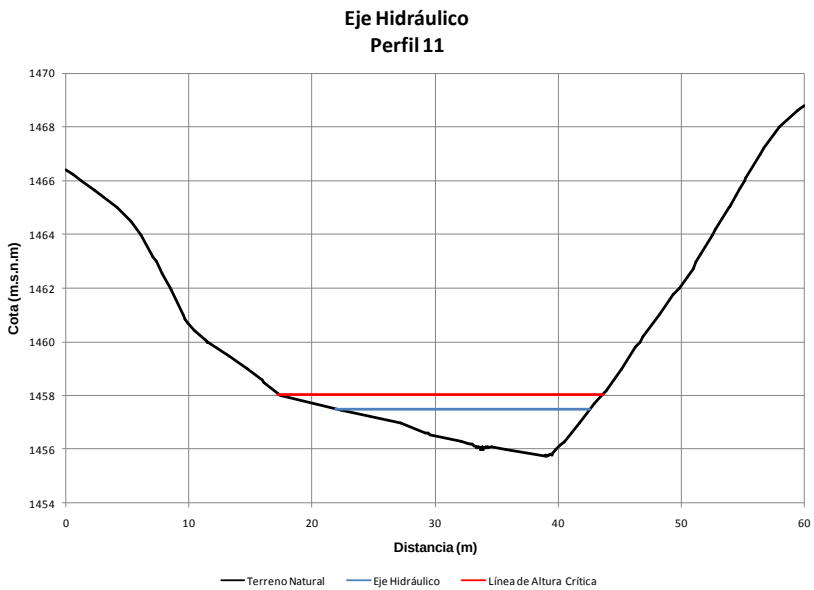


Figure 4.1.2: Results for profile 11

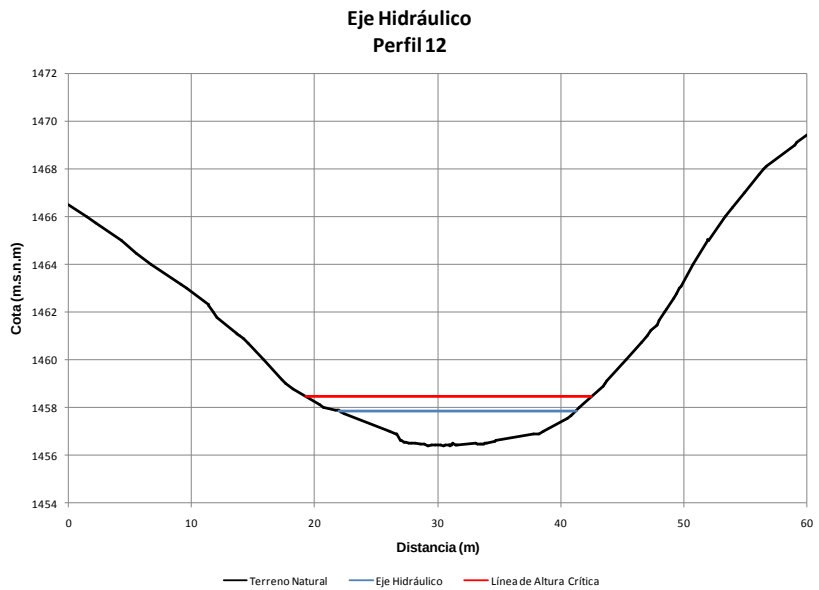


Figure 4.1.3: Results for profile 12

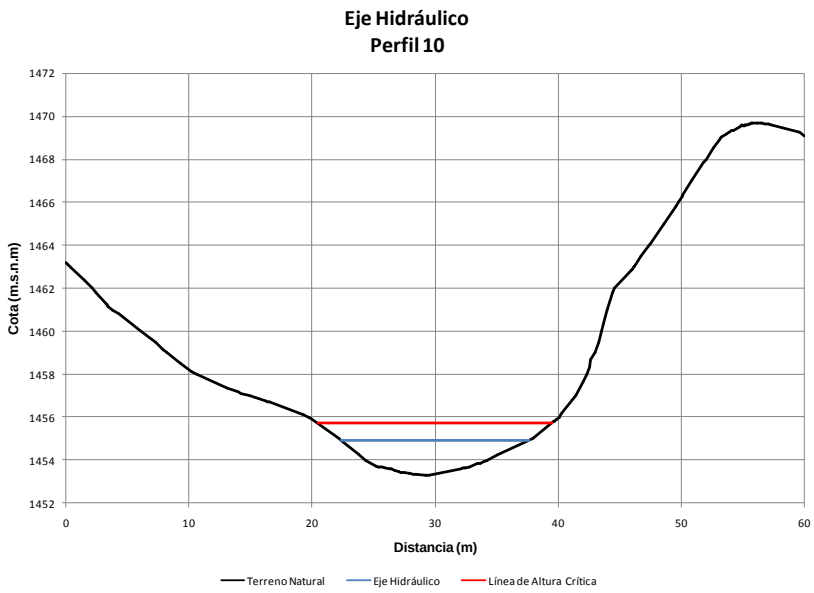


Figure 4.1.4: Results for profile 10

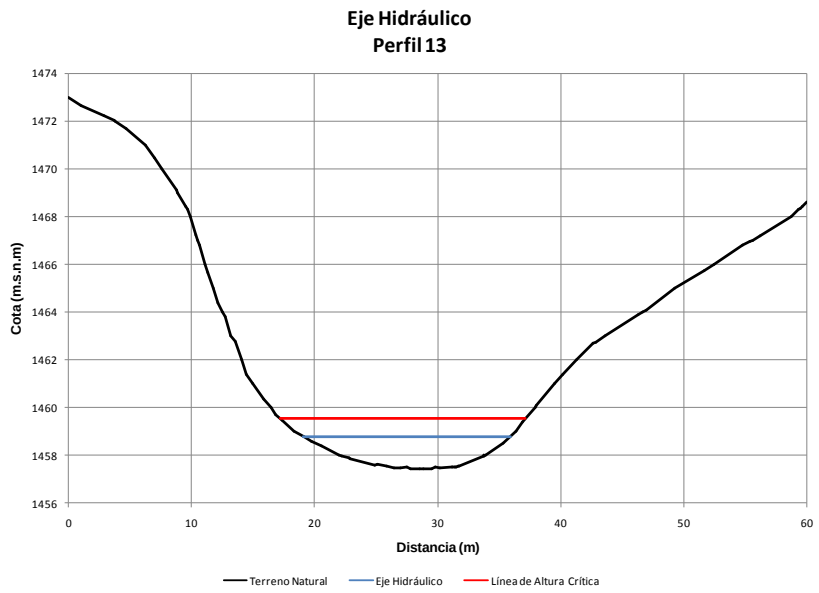


Figure 4.1.5: Results for profile 13

## 4.2 Hydraulic Axis in the Future (with Bridge) Situation

According to drawing 020-CA-PLA-25 the Aucayes Bridge is 40 m long and 5 m wide. The elevation of the bridge platform is 1,470 masl, while the elevation of the lower beam is 1,468 masl. According to the calculations presented in the previous section, the bridge freeboard would be some 10.1 m (with respect to the lower beam). Figure 4.2.1 shows cross profile 11, including the access embankments and the bridge platform.

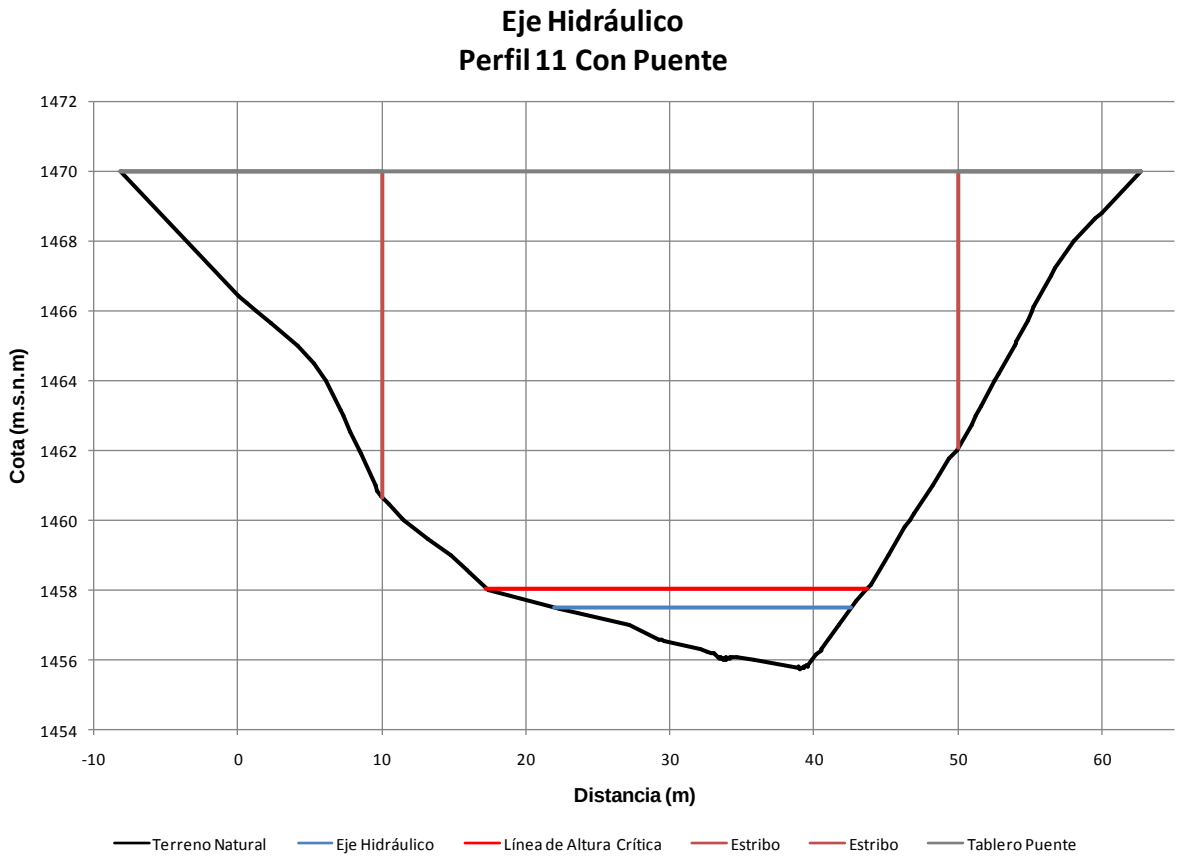


Figure 4.2.1: Aucayes Bridge Hydraulic Axis (Profile 11)

As may be seen in the above figure, the bridge abutments will not obstruct the channel, as they will be founded on rock, outside the channel. Thus, the result of the hydraulic axis in the 'with bridge' situation is equal to that presented in section 4.1 of this report.

## 5. CONCLUSIONS

The results obtained from the calculation of the hydraulic axis on the Aucayes Stream, where a bridge to access window VA-1 is to be located, makes it possible to determine that the bridge does not alter the stream's hydraulic axis under flood conditions.

Finally, according to the preliminary design of the bridge, the lower beam is to be placed some 10 m above the hydraulic axis for a flood with a return period of 100 years (ZH=1,457.87 masl). This value is above the recommended minimum, which is 1 m; therefore, the channel would not be affected during the works construction stage.

# ANNEX 1

## Aucayes Stream Hydraulic Axis.
## Aucayes Bridge
## (No Bridge Situation)

Table A1.1: Results Aucayes Stream Hydraulic Axis, Aucayes Stream VA- 1. Current Situation.

| Perfil | X (m) | Tr (años) | Caudal (m3/s) | Z Fondo (m) | Z H (m) | H | Z Energía (m) | Z H Crítica (m) | H Crítica | Z E. Crítica (m) | J (m/m) | Velocidad (m/s) | Area Esc. (m2) | Per. Mojado (m) | Radio Hidr. (m) | Ancho Sup. (m) | Nº Froude |
|---|---|---|---|---|---|---|---|---|---|---|---|---|---|---|---|---|---|
| 1 | 400 | 2 | 15 | 1428.76 | 1429.48 | 0.72 | 1430.21 | 1429.71 | 0.95 | 1430.03 | 0.08324 | 3.77 | 3.98 | 8.82 | 0.45 | 8.60 | 1.77 |
| | | 5 | 30 | 1428.76 | 1429.75 | 0.99 | 1430.87 | 1430.11 | 1.35 | 1430.56 | 0.07920 | 4.69 | 6.40 | 9.86 | 0.65 | 9.48 | 1.82 |
| | | 10 | 45 | 1428.76 | 1429.96 | 1.20 | 1431.39 | 1430.42 | 1.66 | 1430.97 | 0.07827 | 5.30 | 8.49 | 10.78 | 0.79 | 10.31 | 1.86 |
| | | 25 | 70 | 1428.76 | 1430.24 | 1.48 | 1432.12 | 1430.85 | 2.09 | 1431.50 | 0.08062 | 6.08 | 11.52 | 12.18 | 0.95 | 11.58 | 1.95 |
| | | 50 | 90 | 1428.76 | 1430.41 | 1.65 | 1432.64 | 1431.12 | 2.36 | 1431.85 | 0.08374 | 6.60 | 13.63 | 13.09 | 1.04 | 12.42 | 2.01 |
| | | 100 | 115 | 1428.76 | 1430.60 | 1.84 | 1433.23 | 1431.41 | 2.65 | 1432.24 | 0.08860 | 7.19 | 15.99 | 14.11 | 1.13 | 13.36 | 2.10 |
| | | 200 | 145 | 1428.76 | 1430.78 | 2.02 | 1433.89 | 1431.73 | 2.97 | 1432.64 | 0.09461 | 7.81 | 18.56 | 15.20 | 1.22 | 14.38 | 2.19 |
| 2 | 380 | 2 | 15 | 1430.66 | 1431.22 | 0.56 | 1431.85 | 1431.42 | 0.76 | 1431.71 | 0.08067 | 3.53 | 4.25 | 10.18 | 0.42 | 9.92 | 1.72 |
| | | 5 | 30 | 1430.66 | 1431.43 | 0.77 | 1432.55 | 1431.78 | 1.12 | 1432.23 | 0.08891 | 4.68 | 6.42 | 10.82 | 0.59 | 10.37 | 1.90 |
| | | 10 | 45 | 1430.66 | 1431.60 | 0.94 | 1433.14 | 1432.07 | 1.41 | 1432.64 | 0.09479 | 5.51 | 8.17 | 11.33 | 0.72 | 10.72 | 2.01 |
| | | 25 | 70 | 1430.66 | 1431.83 | 1.17 | 1434.02 | 1432.49 | 1.83 | 1433.22 | 0.10241 | 6.57 | 10.66 | 12.01 | 0.89 | 11.20 | 2.15 |
| | | 50 | 90 | 1430.66 | 1431.98 | 1.32 | 1434.65 | 1432.77 | 2.11 | 1433.62 | 0.10644 | 7.24 | 12.44 | 12.48 | 1.00 | 11.53 | 2.22 |
| | | 100 | 115 | 1430.66 | 1432.16 | 1.50 | 1435.37 | 1433.10 | 2.44 | 1434.08 | 0.10952 | 7.94 | 14.49 | 12.92 | 1.12 | 11.79 | 2.29 |
| | | 200 | 145 | 1430.66 | 1432.35 | 1.69 | 1436.16 | 1433.45 | 2.79 | 1434.57 | 0.11234 | 8.65 | 16.77 | 13.41 | 1.25 | 12.08 | 2.34 |
| 3 | 360 | 2 | 15 | 1432.30 | 1432.92 | 0.62 | 1434.02 | 1433.25 | 0.95 | 1433.60 | 0.13142 | 4.64 | 3.23 | 7.41 | 0.44 | 7.12 | 2.20 |
| | | 5 | 30 | 1432.30 | 1433.16 | 0.86 | 1434.97 | 1433.69 | 1.39 | 1434.17 | 0.14124 | 5.95 | 5.04 | 8.38 | 0.60 | 7.96 | 2.39 |
| | | 10 | 45 | 1432.30 | 1433.34 | 1.04 | 1435.77 | 1434.02 | 1.72 | 1434.61 | 0.15078 | 6.91 | 6.52 | 9.10 | 0.72 | 8.58 | 2.53 |
| | | 25 | 70 | 1432.30 | 1433.58 | 1.28 | 1436.89 | 1434.46 | 2.16 | 1435.20 | 0.16012 | 8.05 | 8.69 | 10.09 | 0.86 | 9.44 | 2.68 |
| | | 50 | 90 | 1432.30 | 1433.75 | 1.45 | 1437.62 | 1434.76 | 2.46 | 1435.60 | 0.16403 | 8.72 | 10.32 | 10.82 | 0.95 | 10.08 | 2.75 |
| | | 100 | 115 | 1432.30 | 1433.93 | 1.63 | 1438.42 | 1435.09 | 2.79 | 1436.05 | 0.16644 | 9.39 | 12.25 | 11.63 | 1.05 | 10.80 | 2.81 |
| | | 200 | 145 | 1432.30 | 1434.13 | 1.83 | 1439.26 | 1435.44 | 3.14 | 1436.52 | 0.16635 | 10.04 | 14.44 | 12.39 | 1.17 | 11.45 | 2.85 |
| 4 | 340 | 2 | 15 | 1436.10 | 1436.56 | 0.46 | 1438.23 | 1436.94 | 0.84 | 1437.23 | 0.34920 | 5.73 | 2.62 | 9.09 | 0.29 | 8.86 | 3.36 |
| | | 5 | 30 | 1436.10 | 1436.72 | 0.62 | 1439.40 | 1437.31 | 1.21 | 1437.74 | 0.33858 | 7.25 | 4.14 | 9.87 | 0.42 | 9.54 | 3.51 |
| | | 10 | 45 | 1436.10 | 1436.87 | 0.77 | 1440.18 | 1437.60 | 1.50 | 1438.14 | 0.30234 | 8.05 | 5.59 | 10.44 | 0.54 | 10.02 | 3.44 |
| | | 25 | 70 | 1436.10 | 1437.09 | 0.99 | 1441.11 | 1438.01 | 1.91 | 1438.69 | 0.25813 | 8.88 | 7.89 | 11.32 | 0.70 | 10.76 | 3.31 |
| | | 50 | 90 | 1436.10 | 1437.25 | 1.15 | 1441.68 | 1438.30 | 2.20 | 1439.05 | 0.23462 | 9.32 | 9.65 | 11.98 | 0.81 | 11.32 | 3.22 |
| | | 100 | 115 | 1436.10 | 1437.44 | 1.34 | 1442.29 | 1438.62 | 2.52 | 1439.44 | 0.21383 | 9.76 | 11.78 | 12.73 | 0.93 | 11.96 | 3.14 |
| | | 200 | 145 | 1436.10 | 1437.64 | 1.54 | 1442.91 | 1438.94 | 2.84 | 1439.85 | 0.19608 | 10.17 | 14.25 | 13.55 | 1.05 | 12.67 | 3.06 |
| 5 | 320 | 2 | 15 | 1440.30 | 1441.04 | 0.74 | 1442.10 | 1441.36 | 1.06 | 1441.71 | 0.11985 | 4.57 | 3.28 | 7.15 | 0.46 | 6.92 | 2.12 |
| | | 5 | 30 | 1440.30 | 1441.37 | 1.07 | 1442.71 | 1441.80 | 1.50 | 1442.28 | 0.09192 | 5.12 | 5.85 | 8.82 | 0.66 | 8.44 | 1.96 |
| | | 10 | 45 | 1440.30 | 1441.62 | 1.32 | 1443.20 | 1442.13 | 1.83 | 1442.71 | 0.08282 | 5.58 | 8.07 | 9.91 | 0.81 | 9.37 | 1.92 |
| | | 25 | 70 | 1440.30 | 1441.94 | 1.64 | 1443.92 | 1442.58 | 2.28 | 1443.28 | 0.07855 | 6.24 | 11.21 | 11.18 | 1.00 | 10.48 | 1.93 |
| | | 50 | 90 | 1440.30 | 1442.15 | 1.85 | 1444.41 | 1442.88 | 2.58 | 1443.66 | 0.07806 | 6.67 | 13.50 | 12.13 | 1.11 | 11.33 | 1.95 |
| | | 100 | 115 | 1440.30 | 1442.37 | 2.07 | 1444.95 | 1443.20 | 2.90 | 1444.06 | 0.07811 | 7.11 | 16.18 | 13.22 | 1.22 | 12.32 | 1.98 |
| | | 200 | 145 | 1440.30 | 1442.61 | 2.31 | 1445.51 | 1443.51 | 3.21 | 1444.49 | 0.07891 | 7.55 | 19.20 | 14.44 | 1.33 | 13.44 | 2.02 |
| 6 | 300 | 2 | 15 | 1443.00 | 1443.61 | 0.61 | 1444.09 | 1443.75 | 0.75 | 1443.99 | 0.07935 | 3.08 | 4.87 | 14.12 | 0.35 | 13.83 | 1.66 |
| | | 5 | 30 | 1443.00 | 1443.76 | 0.76 | 1444.66 | 1444.05 | 1.05 | 1444.38 | 0.09965 | 4.20 | 7.14 | 15.38 | 0.46 | 15.04 | 1.95 |
| | | 10 | 45 | 1443.00 | 1443.88 | 0.88 | 1445.17 | 1444.27 | 1.27 | 1444.69 | 0.11486 | 5.04 | 8.93 | 16.31 | 0.55 | 15.93 | 2.15 |
| | | 25 | 70 | 1443.00 | 1444.04 | 1.04 | 1445.91 | 1444.55 | 1.55 | 1445.13 | 0.12880 | 6.07 | 11.54 | 17.39 | 0.66 | 16.96 | 2.35 |
| | | 50 | 90 | 1443.00 | 1444.16 | 1.16 | 1446.37 | 1444.78 | 1.78 | 1445.44 | 0.12669 | 6.59 | 13.66 | 17.95 | 0.76 | 17.46 | 2.38 |
| | | 100 | 115 | 1443.00 | 1444.29 | 1.29 | 1446.94 | 1445.03 | 2.03 | 1445.78 | 0.12836 | 7.22 | 15.94 | 18.48 | 0.86 | 17.90 | 2.44 |
| | | 200 | 145 | 1443.00 | 1444.42 | 1.42 | 1447.61 | 1445.29 | 2.29 | 1446.16 | 0.13333 | 7.92 | 18.31 | 19.00 | 0.96 | 18.34 | 2.53 |
| 7 | 280 | 2 | 15 | 1444.90 | 1445.44 | 0.54 | 1447.02 | 1445.84 | 0.94 | 1446.15 | 0.25217 | 5.57 | 2.69 | 7.64 | 0.35 | 7.48 | 2.96 |
| | | 5 | 30 | 1444.90 | 1445.65 | 0.75 | 1448.04 | 1446.27 | 1.37 | 1446.68 | 0.23645 | 6.84 | 4.38 | 8.70 | 0.50 | 8.45 | 3.03 |
| | | 10 | 45 | 1444.90 | 1445.84 | 0.94 | 1448.71 | 1446.55 | 1.65 | 1447.04 | 0.21409 | 7.51 | 5.99 | 9.60 | 0.62 | 9.27 | 2.98 |
| | | 25 | 70 | 1444.90 | 1446.09 | 1.19 | 1449.50 | 1446.91 | 2.01 | 1447.53 | 0.19401 | 8.18 | 8.56 | 11.21 | 0.76 | 10.70 | 2.92 |
| | | 50 | 90 | 1444.90 | 1446.27 | 1.37 | 1449.95 | 1447.16 | 2.26 | 1447.86 | 0.19836 | 8.49 | 10.60 | 13.33 | 0.80 | 12.76 | 2.98 |
| | | 100 | 115 | 1444.90 | 1446.44 | 1.54 | 1450.47 | 1447.44 | 2.54 | 1448.23 | 0.19371 | 8.90 | 12.92 | 14.89 | 0.87 | 14.26 | 2.98 |
| | | 200 | 145 | 1444.90 | 1446.62 | 1.72 | 1451.07 | 1447.72 | 2.82 | 1448.63 | 0.18019 | 9.35 | 15.50 | 15.70 | 0.99 | 15.00 | 2.94 |
| 8 | 260 | 2 | 15 | 1448.76 | 1449.48 | 0.72 | 1450.43 | 1449.78 | 1.02 | 1450.08 | 0.11918 | 4.32 | 3.47 | 8.22 | 0.42 | 8.03 | 2.10 |
| | | 5 | 30 | 1448.76 | 1449.78 | 1.02 | 1450.99 | 1450.15 | 1.39 | 1450.59 | 0.09403 | 4.86 | 6.17 | 10.24 | 0.60 | 9.94 | 1.97 |
| | | 10 | 45 | 1448.76 | 1450.00 | 1.24 | 1451.44 | 1450.46 | 1.70 | 1450.98 | 0.08685 | 5.33 | 8.45 | 11.51 | 0.73 | 11.13 | 1.95 |
| | | 25 | 70 | 1448.76 | 1450.27 | 1.51 | 1452.10 | 1450.85 | 2.09 | 1451.49 | 0.08404 | 6.00 | 11.66 | 12.97 | 0.90 | 12.48 | 1.98 |
| | | 50 | 90 | 1448.76 | 1450.45 | 1.69 | 1452.56 | 1451.14 | 2.38 | 1451.83 | 0.08374 | 6.45 | 13.96 | 13.92 | 1.00 | 13.36 | 2.01 |
| | | 100 | 115 | 1448.76 | 1450.64 | 1.88 | 1453.06 | 1451.45 | 2.69 | 1452.19 | 0.08301 | 6.89 | 16.70 | 14.96 | 1.12 | 14.32 | 2.04 |
| | | 200 | 145 | 1448.76 | 1450.85 | 2.09 | 1453.60 | 1451.74 | 2.98 | 1452.55 | 0.08280 | 7.34 | 19.75 | 16.05 | 1.23 | 15.33 | 2.06 |

Table A1.1: Results Aucayes Stream Hydraulic Axis, Aucayes Stream VA- 1. Current Situation. (Continued)

| Perfil | X (m) | Tr (años) | Caudal (m3/s) | Z Fondo (m) | Z H (m) | H | Z Energía (m) | Z H Crítica (m) | H Crítica | Z E. Crítica (m) | J (m/m) | Velocidad (m/s) | Area Esc. (m2) | Per. Mojado (m) | Radio Hidr. (m) | Ancho Sup. (m) | Nº Froude |
|---|---|---|---|---|---|---|---|---|---|---|---|---|---|---|---|---|---|
| 9 | 240 | 2 | 15 | 1451.20 | 1452.01 | 0.81 | 1452.43 | 1452.14 | 0.94 | 1452.35 | 0.08091 | 2.89 | 5.20 | 16.84 | 0.31 | 16.48 | 1.64 |
| | | 5 | 30 | 1451.20 | 1452.15 | 0.95 | 1452.96 | 1452.40 | 1.20 | 1452.72 | 0.09974 | 4.00 | 7.51 | 17.46 | 0.43 | 17.03 | 1.92 |
| | | 10 | 45 | 1451.20 | 1452.25 | 1.05 | 1453.44 | 1452.60 | 1.40 | 1453.02 | 0.11310 | 4.83 | 9.31 | 17.91 | 0.52 | 17.42 | 2.11 |
| | | 25 | 70 | 1451.20 | 1452.40 | 1.20 | 1454.15 | 1452.91 | 1.71 | 1453.43 | 0.12645 | 5.86 | 11.94 | 18.67 | 0.64 | 18.12 | 2.31 |
| | | 50 | 90 | 1451.20 | 1452.51 | 1.31 | 1454.65 | 1453.12 | 1.92 | 1453.71 | 0.13206 | 6.48 | 13.89 | 19.31 | 0.72 | 18.72 | 2.40 |
| | | 100 | 115 | 1451.20 | 1452.63 | 1.43 | 1455.19 | 1453.35 | 2.15 | 1454.02 | 0.13525 | 7.09 | 16.21 | 20.05 | 0.81 | 19.42 | 2.48 |
| | | 200 | 145 | 1451.20 | 1452.77 | 1.57 | 1455.76 | 1453.59 | 2.39 | 1454.36 | 0.13553 | 7.66 | 18.92 | 20.88 | 0.91 | 20.20 | 2.53 |
| 10 | 220 | 2 | 15 | 1453.29 | 1453.88 | 0.59 | 1455.06 | 1454.20 | 0.91 | 1454.48 | 0.19603 | 4.82 | 3.11 | 9.09 | 0.34 | 8.99 | 2.61 |
| | | 5 | 30 | 1453.29 | 1454.10 | 0.81 | 1455.76 | 1454.56 | 1.27 | 1454.96 | 0.16748 | 5.71 | 5.26 | 10.57 | 0.50 | 10.39 | 2.56 |
| | | 10 | 45 | 1453.29 | 1454.28 | 0.99 | 1456.25 | 1454.83 | 1.54 | 1455.33 | 0.14755 | 6.21 | 7.25 | 11.67 | 0.62 | 11.42 | 2.49 |
| | | 25 | 70 | 1453.29 | 1454.55 | 1.26 | 1456.81 | 1455.21 | 1.92 | 1455.81 | 0.12427 | 6.67 | 10.49 | 13.35 | 0.79 | 13.00 | 2.37 |
| | | 50 | 90 | 1453.29 | 1454.73 | 1.44 | 1457.19 | 1455.46 | 2.17 | 1456.13 | 0.11352 | 6.95 | 12.95 | 14.49 | 0.89 | 14.09 | 2.31 |
| | | 100 | 115 | 1453.29 | 1454.93 | 1.64 | 1457.60 | 1455.72 | 2.43 | 1456.49 | 0.10521 | 7.25 | 15.87 | 15.75 | 1.01 | 15.27 | 2.27 |
| | | 200 | 145 | 1453.29 | 1455.13 | 1.84 | 1458.06 | 1456.02 | 2.73 | 1456.87 | 0.09826 | 7.57 | 19.14 | 16.89 | 1.13 | 16.33 | 2.23 |
| 11 | 201.3 | 2 | 15 | 1455.75 | 1456.52 | 0.77 | 1457.05 | 1456.68 | 0.93 | 1456.95 | 0.07369 | 3.23 | 4.64 | 11.81 | 0.39 | 10.97 | 1.59 |
| | | 5 | 30 | 1455.75 | 1456.78 | 1.03 | 1457.54 | 1457.02 | 1.27 | 1457.39 | 0.06577 | 3.86 | 7.77 | 13.94 | 0.56 | 13.01 | 1.59 |
| | | 10 | 45 | 1455.75 | 1456.97 | 1.22 | 1457.93 | 1457.29 | 1.54 | 1457.72 | 0.06402 | 4.34 | 10.37 | 15.31 | 0.68 | 14.31 | 1.63 |
| | | 25 | 70 | 1455.75 | 1457.21 | 1.46 | 1458.45 | 1457.63 | 1.88 | 1458.13 | 0.06832 | 4.92 | 14.22 | 18.23 | 0.78 | 17.15 | 1.73 |
| | | 50 | 90 | 1455.75 | 1457.36 | 1.61 | 1458.81 | 1457.84 | 2.09 | 1458.40 | 0.07263 | 5.33 | 16.88 | 20.08 | 0.84 | 18.96 | 1.80 |
| | | 100 | 115 | 1455.75 | 1457.51 | 1.76 | 1459.23 | 1458.06 | 2.31 | 1458.68 | 0.07858 | 5.82 | 19.75 | 21.84 | 0.90 | 20.67 | 1.90 |
| | | 200 | 145 | 1455.75 | 1457.66 | 1.91 | 1459.68 | 1458.27 | 2.52 | 1458.99 | 0.08253 | 6.29 | 23.05 | 23.57 | 0.98 | 22.35 | 1.98 |
| 12 | 195.3 | 2 | 15 | 1456.40 | 1457.04 | 0.64 | 1457.43 | 1457.15 | 0.75 | 1457.39 | 0.05162 | 2.79 | 5.38 | 13.12 | 0.41 | 12.82 | 1.37 |
| | | 5 | 30 | 1456.40 | 1457.25 | 0.85 | 1457.92 | 1457.44 | 1.04 | 1457.80 | 0.05847 | 3.63 | 8.27 | 14.91 | 0.55 | 14.56 | 1.54 |
| | | 10 | 45 | 1456.40 | 1457.40 | 1.00 | 1458.32 | 1457.69 | 1.29 | 1458.12 | 0.06376 | 4.23 | 10.63 | 16.23 | 0.65 | 15.85 | 1.65 |
| | | 25 | 70 | 1456.40 | 1457.61 | 1.21 | 1458.88 | 1458.03 | 1.63 | 1458.54 | 0.07027 | 5.00 | 14.01 | 17.94 | 0.78 | 17.50 | 1.78 |
| | | 50 | 90 | 1456.40 | 1457.74 | 1.34 | 1459.28 | 1458.23 | 1.83 | 1458.82 | 0.07479 | 5.51 | 16.33 | 18.92 | 0.86 | 18.44 | 1.87 |
| | | 100 | 115 | 1456.40 | 1457.87 | 1.47 | 1459.75 | 1458.46 | 2.06 | 1459.13 | 0.07923 | 6.07 | 18.94 | 19.80 | 0.96 | 19.27 | 1.96 |
| | | 200 | 145 | 1456.40 | 1458.03 | 1.63 | 1460.23 | 1458.70 | 2.30 | 1459.47 | 0.08524 | 6.59 | 22.02 | 21.53 | 1.02 | 20.94 | 2.05 |
| 13 | 180 | 2 | 15 | 1457.44 | 1457.95 | 0.51 | 1458.68 | 1458.18 | 0.74 | 1458.43 | 0.11926 | 3.78 | 3.97 | 11.47 | 0.35 | 11.38 | 2.04 |
| | | 5 | 30 | 1457.44 | 1458.16 | 0.72 | 1459.25 | 1458.49 | 1.05 | 1458.86 | 0.11128 | 4.63 | 6.48 | 13.11 | 0.49 | 12.92 | 2.09 |
| | | 10 | 45 | 1457.44 | 1458.31 | 0.87 | 1459.73 | 1458.74 | 1.30 | 1459.19 | 0.11065 | 5.28 | 8.53 | 14.13 | 0.60 | 13.90 | 2.15 |
| | | 25 | 70 | 1457.44 | 1458.51 | 1.07 | 1460.42 | 1459.07 | 1.63 | 1459.64 | 0.11385 | 6.12 | 11.43 | 15.49 | 0.74 | 15.19 | 2.25 |
| | | 50 | 90 | 1457.44 | 1458.64 | 1.20 | 1460.90 | 1459.30 | 1.86 | 1459.95 | 0.11540 | 6.66 | 13.52 | 16.32 | 0.83 | 15.98 | 2.31 |
| | | 100 | 115 | 1457.44 | 1458.79 | 1.35 | 1461.44 | 1459.56 | 2.12 | 1460.30 | 0.11650 | 7.21 | 15.96 | 17.24 | 0.93 | 16.84 | 2.36 |
| | | 200 | 145 | 1457.44 | 1458.95 | 1.51 | 1462.00 | 1459.83 | 2.39 | 1460.67 | 0.11660 | 7.74 | 18.74 | 18.19 | 1.03 | 17.74 | 2.40 |
| 14 | 160 | 2 | 15 | 1459.29 | 1459.97 | 0.68 | 1460.55 | 1460.12 | 0.83 | 1460.43 | 0.07446 | 3.39 | 4.42 | 10.58 | 0.42 | 10.45 | 1.66 |
| | | 5 | 30 | 1459.29 | 1460.17 | 0.88 | 1461.20 | 1460.50 | 1.21 | 1460.90 | 0.08524 | 4.48 | 6.70 | 11.67 | 0.57 | 11.41 | 1.87 |
| | | 10 | 45 | 1459.29 | 1460.33 | 1.04 | 1461.73 | 1460.77 | 1.48 | 1461.28 | 0.09094 | 5.24 | 8.59 | 12.43 | 0.69 | 12.06 | 1.98 |
| | | 25 | 70 | 1459.29 | 1460.56 | 1.27 | 1462.47 | 1461.15 | 1.86 | 1461.80 | 0.09312 | 6.12 | 11.44 | 13.33 | 0.86 | 12.83 | 2.07 |
| | | 50 | 90 | 1459.29 | 1460.73 | 1.44 | 1462.95 | 1461.42 | 2.13 | 1462.15 | 0.09132 | 6.60 | 13.63 | 13.99 | 0.97 | 13.39 | 2.09 |
| | | 100 | 115 | 1459.29 | 1460.92 | 1.63 | 1463.47 | 1461.71 | 2.42 | 1462.54 | 0.08883 | 7.07 | 16.26 | 14.73 | 1.10 | 14.03 | 2.10 |
| | | 200 | 145 | 1459.29 | 1461.13 | 1.84 | 1464.02 | 1462.02 | 2.73 | 1462.95 | 0.08657 | 7.53 | 19.26 | 15.60 | 1.24 | 14.78 | 2.10 |
| 15 | 140 | 2 | 15 | 1460.90 | 1461.55 | 0.65 | 1462.56 | 1461.87 | 0.97 | 1462.17 | 0.12296 | 4.45 | 3.37 | 7.79 | 0.43 | 7.62 | 2.14 |
| | | 5 | 30 | 1460.90 | 1461.85 | 0.95 | 1463.15 | 1462.25 | 1.35 | 1462.69 | 0.10304 | 5.06 | 5.93 | 9.93 | 0.60 | 9.67 | 2.06 |
| | | 10 | 45 | 1460.90 | 1462.07 | 1.17 | 1463.60 | 1462.55 | 1.65 | 1463.08 | 0.09173 | 5.47 | 8.22 | 11.22 | 0.73 | 10.87 | 2.01 |
| | | 25 | 70 | 1460.90 | 1462.36 | 1.46 | 1464.23 | 1462.95 | 2.05 | 1463.62 | 0.08227 | 6.05 | 11.58 | 12.53 | 0.92 | 12.05 | 1.97 |
| | | 50 | 90 | 1460.90 | 1462.56 | 1.66 | 1464.65 | 1463.23 | 2.33 | 1463.97 | 0.07816 | 6.40 | 14.06 | 13.44 | 1.05 | 12.86 | 1.95 |
| | | 100 | 115 | 1460.90 | 1462.78 | 1.88 | 1465.13 | 1463.52 | 2.62 | 1464.36 | 0.07547 | 6.79 | 16.95 | 14.46 | 1.17 | 13.78 | 1.95 |
| | | 200 | 145 | 1460.90 | 1463.00 | 2.10 | 1465.64 | 1463.84 | 2.94 | 1464.78 | 0.07432 | 7.20 | 20.14 | 15.54 | 1.30 | 14.77 | 1.97 |
| 16 | 120 | 2 | 15 | 1462.66 | 1463.61 | 0.95 | 1464.12 | 1463.77 | 1.11 | 1464.06 | 0.05098 | 3.16 | 4.75 | 9.49 | 0.50 | 9.26 | 1.41 |
| | | 5 | 30 | 1462.66 | 1463.91 | 1.25 | 1464.64 | 1464.14 | 1.48 | 1464.53 | 0.05241 | 3.78 | 7.94 | 12.42 | 0.64 | 12.12 | 1.49 |
| | | 10 | 45 | 1462.66 | 1464.10 | 1.44 | 1465.06 | 1464.40 | 1.74 | 1464.89 | 0.05566 | 4.35 | 10.35 | 13.72 | 0.75 | 13.36 | 1.58 |
| | | 25 | 70 | 1462.66 | 1464.34 | 1.68 | 1465.66 | 1464.76 | 2.10 | 1465.37 | 0.05887 | 5.09 | 13.75 | 15.00 | 0.92 | 14.53 | 1.67 |
| | | 50 | 90 | 1462.66 | 1464.51 | 1.85 | 1466.08 | 1465.01 | 2.35 | 1465.70 | 0.06084 | 5.55 | 16.21 | 15.90 | 1.02 | 15.37 | 1.73 |
| | | 100 | 115 | 1462.66 | 1464.68 | 2.02 | 1466.55 | 1465.27 | 2.61 | 1466.07 | 0.06285 | 6.05 | 19.01 | 16.80 | 1.13 | 16.19 | 1.78 |
| | | 200 | 145 | 1462.66 | 1464.87 | 2.21 | 1467.07 | 1465.56 | 2.90 | 1466.47 | 0.06468 | 6.58 | 22.04 | 17.56 | 1.26 | 16.84 | 1.84 |

Table A1.1: Results Aucayes Stream Hydraulic Axis, Aucayes Stream VA- 1. Current Situation. (Continued)

| Perfil | X (m) | Tr (años) | Caudal (m3/s) | Z Fondo (m) | Z H (m) | H | Z Energía (m) | Z H Crítica (m) | H Crítica | Z E. Crítica (m) | J (m/m) | Velocidad (m/s) | Area Esc. (m2) | Per. Mojado (m) | Radio Hidr. (m) | Ancho Sup. (m) | Nº Froude |
|---|---|---|---|---|---|---|---|---|---|---|---|---|---|---|---|---|---|
| 17 | 100 | 2 | 15 | 1464.16 | 1464.87 | 0.71 | 1465.60 | 1465.10 | 0.94 | 1465.36 | 0.10448 | 3.78 | 3.97 | 10.39 | 0.38 | 10.21 | 1.94 |
| | | 5 | 30 | 1464.16 | 1465.09 | 0.93 | 1466.17 | 1465.43 | 1.27 | 1465.81 | 0.10301 | 4.59 | 6.53 | 12.63 | 0.52 | 12.39 | 2.02 |
| | | 10 | 45 | 1464.16 | 1465.26 | 1.10 | 1466.63 | 1465.69 | 1.53 | 1466.16 | 0.09836 | 5.19 | 8.68 | 13.52 | 0.64 | 13.21 | 2.04 |
| | | 25 | 70 | 1464.16 | 1465.48 | 1.32 | 1467.30 | 1466.05 | 1.89 | 1466.64 | 0.09723 | 5.97 | 11.72 | 14.65 | 0.80 | 14.25 | 2.10 |
| | | 50 | 90 | 1464.16 | 1465.63 | 1.47 | 1467.77 | 1466.27 | 2.11 | 1466.96 | 0.09793 | 6.48 | 13.90 | 15.47 | 0.90 | 15.00 | 2.15 |
| | | 100 | 115 | 1464.16 | 1465.79 | 1.63 | 1468.30 | 1466.52 | 2.36 | 1467.33 | 0.09946 | 7.02 | 16.39 | 16.35 | 1.00 | 15.83 | 2.20 |
| | | 200 | 145 | 1464.16 | 1465.96 | 1.80 | 1468.89 | 1466.83 | 2.67 | 1467.72 | 0.10154 | 7.58 | 19.13 | 17.28 | 1.11 | 16.69 | 2.26 |
| 18 | 80 | 2 | 15 | 1465.67 | 1466.55 | 0.88 | 1467.18 | 1466.75 | 1.08 | 1467.07 | 0.06088 | 3.51 | 4.28 | 8.37 | 0.51 | 8.12 | 1.54 |
| | | 5 | 30 | 1465.67 | 1466.86 | 1.19 | 1467.76 | 1467.15 | 1.48 | 1467.57 | 0.06168 | 4.19 | 7.17 | 10.85 | 0.66 | 10.50 | 1.62 |
| | | 10 | 45 | 1465.67 | 1467.06 | 1.39 | 1468.24 | 1467.43 | 1.76 | 1467.97 | 0.06569 | 4.82 | 9.34 | 12.00 | 0.78 | 11.55 | 1.71 |
| | | 25 | 70 | 1465.67 | 1467.30 | 1.63 | 1468.97 | 1467.84 | 2.17 | 1468.51 | 0.07098 | 5.71 | 12.25 | 12.92 | 0.95 | 12.30 | 1.83 |
| | | 50 | 90 | 1465.67 | 1467.47 | 1.80 | 1469.48 | 1468.11 | 2.44 | 1468.88 | 0.07441 | 6.29 | 14.32 | 13.56 | 1.06 | 12.83 | 1.90 |
| | | 100 | 115 | 1465.67 | 1467.65 | 1.98 | 1470.07 | 1468.43 | 2.76 | 1469.28 | 0.07809 | 6.89 | 16.69 | 14.27 | 1.17 | 13.42 | 1.97 |
| | | 200 | 145 | 1465.67 | 1467.84 | 2.17 | 1470.71 | 1468.75 | 3.08 | 1469.70 | 0.08172 | 7.51 | 19.31 | 15.02 | 1.29 | 14.04 | 2.04 |
| 19 | 60 | 2 | 15 | 1467.37 | 1468.00 | 0.63 | 1468.73 | 1468.23 | 0.86 | 1468.52 | 0.09860 | 3.80 | 3.95 | 9.84 | 0.40 | 9.72 | 1.90 |
| | | 5 | 30 | 1467.37 | 1468.20 | 0.83 | 1469.50 | 1468.59 | 1.22 | 1469.03 | 0.11094 | 5.05 | 5.95 | 10.56 | 0.56 | 10.31 | 2.12 |
| | | 10 | 45 | 1467.37 | 1468.36 | 0.99 | 1470.12 | 1468.88 | 1.51 | 1469.43 | 0.11479 | 5.87 | 7.67 | 11.15 | 0.69 | 10.81 | 2.22 |
| | | 25 | 70 | 1467.37 | 1468.59 | 1.22 | 1470.98 | 1469.29 | 1.92 | 1469.98 | 0.11690 | 6.84 | 10.23 | 11.98 | 0.85 | 11.50 | 2.31 |
| | | 50 | 90 | 1467.37 | 1468.75 | 1.38 | 1471.57 | 1469.58 | 2.21 | 1470.36 | 0.11737 | 7.43 | 12.11 | 12.56 | 0.96 | 11.98 | 2.36 |
| | | 100 | 115 | 1467.37 | 1468.93 | 1.56 | 1472.23 | 1469.88 | 2.51 | 1470.77 | 0.11803 | 8.05 | 14.29 | 13.21 | 1.08 | 12.51 | 2.40 |
| | | 200 | 145 | 1467.37 | 1469.12 | 1.75 | 1472.94 | 1470.22 | 2.85 | 1471.22 | 0.11785 | 8.66 | 16.75 | 13.85 | 1.21 | 13.04 | 2.44 |
| 20 | 40 | 2 | 15 | 1470.10 | 1470.59 | 0.49 | 1471.77 | 1470.90 | 0.80 | 1471.17 | 0.23433 | 4.79 | 3.13 | 10.51 | 0.30 | 10.29 | 2.78 |
| | | 5 | 30 | 1470.10 | 1470.79 | 0.69 | 1472.45 | 1471.24 | 1.14 | 1471.63 | 0.18876 | 5.70 | 5.26 | 11.60 | 0.45 | 11.26 | 2.66 |
| | | 10 | 45 | 1470.10 | 1470.95 | 0.85 | 1472.99 | 1471.50 | 1.40 | 1472.00 | 0.17304 | 6.33 | 7.11 | 12.55 | 0.57 | 12.04 | 2.63 |
| | | 25 | 70 | 1470.10 | 1471.17 | 1.07 | 1473.76 | 1471.87 | 1.77 | 1472.51 | 0.15985 | 7.13 | 9.82 | 13.65 | 0.72 | 12.99 | 2.62 |
| | | 50 | 90 | 1470.10 | 1471.31 | 1.21 | 1474.28 | 1472.12 | 2.02 | 1472.86 | 0.15349 | 7.63 | 11.79 | 14.36 | 0.82 | 13.58 | 2.62 |
| | | 100 | 115 | 1470.10 | 1471.48 | 1.38 | 1474.88 | 1472.39 | 2.29 | 1473.26 | 0.14628 | 8.17 | 14.08 | 14.95 | 0.94 | 14.02 | 2.60 |
| | | 200 | 145 | 1470.10 | 1471.66 | 1.56 | 1475.52 | 1472.69 | 2.59 | 1473.69 | 0.14020 | 8.70 | 16.66 | 15.58 | 1.07 | 14.50 | 2.59 |
| 21 | 20 | 2 | 15 | 1472.45 | 1473.24 | 0.79 | 1473.76 | 1473.38 | 0.93 | 1473.71 | 0.05253 | 3.21 | 4.68 | 9.37 | 0.50 | 8.94 | 1.41 |
| | | 5 | 30 | 1472.45 | 1473.51 | 1.06 | 1474.41 | 1473.78 | 1.33 | 1474.27 | 0.05640 | 4.20 | 7.14 | 10.06 | 0.71 | 9.35 | 1.53 |
| | | 10 | 45 | 1472.45 | 1473.73 | 1.28 | 1474.94 | 1474.10 | 1.65 | 1474.72 | 0.05843 | 4.89 | 9.21 | 10.62 | 0.87 | 9.68 | 1.60 |
| | | 25 | 70 | 1472.45 | 1474.04 | 1.59 | 1475.69 | 1474.56 | 2.11 | 1475.34 | 0.05995 | 5.71 | 12.27 | 11.43 | 1.07 | 10.19 | 1.66 |
| | | 50 | 90 | 1472.45 | 1474.25 | 1.80 | 1476.21 | 1474.87 | 2.42 | 1475.77 | 0.06065 | 6.21 | 14.50 | 12.01 | 1.21 | 10.58 | 1.69 |
| | | 100 | 115 | 1472.45 | 1474.49 | 2.04 | 1476.80 | 1475.22 | 2.77 | 1476.25 | 0.06150 | 6.73 | 17.08 | 12.65 | 1.35 | 11.01 | 1.72 |
| | | 200 | 145 | 1472.45 | 1474.75 | 2.30 | 1477.43 | 1475.60 | 3.15 | 1476.76 | 0.06234 | 7.26 | 19.97 | 13.35 | 1.50 | 11.47 | 1.76 |
| 22 | 0 | 2 | 15 | 1473.86 | 1474.46 | 0.60 | 1475.28 | 1474.72 | 0.86 | 1475.03 | 0.10199 | 4.00 | 3.75 | 8.85 | 0.42 | 8.58 | 1.93 |
| | | 5 | 30 | 1473.86 | 1474.70 | 0.84 | 1476.02 | 1475.11 | 1.25 | 1475.57 | 0.10190 | 5.08 | 5.91 | 9.77 | 0.61 | 9.33 | 2.04 |
| | | 10 | 45 | 1473.86 | 1474.90 | 1.04 | 1476.61 | 1475.43 | 1.57 | 1475.99 | 0.10195 | 5.80 | 7.76 | 10.51 | 0.74 | 9.97 | 2.10 |
| | | 25 | 70 | 1473.86 | 1475.16 | 1.30 | 1477.41 | 1475.84 | 1.98 | 1476.55 | 0.10187 | 6.64 | 10.55 | 11.65 | 0.91 | 10.97 | 2.16 |
| | | 50 | 90 | 1473.86 | 1475.34 | 1.48 | 1477.96 | 1476.10 | 2.24 | 1476.94 | 0.10201 | 7.17 | 12.56 | 12.37 | 1.01 | 11.60 | 2.20 |
| | | 100 | 115 | 1473.86 | 1475.54 | 1.68 | 1478.58 | 1476.43 | 2.57 | 1477.37 | 0.10186 | 7.72 | 14.89 | 13.10 | 1.14 | 12.21 | 2.23 |
| | | 200 | 145 | 1473.86 | 1475.74 | 1.88 | 1479.25 | 1476.77 | 2.91 | 1477.84 | 0.10197 | 8.29 | 17.48 | 13.84 | 1.26 | 12.81 | 2.27 |

# ALTO MAIPO HYDROLECTRIC PROJECT

# BASIC ENGINEERING

## AM-CO304 CONTRACT

## ALFALFAL II POWER PLANT
## YESO- LO ENCAÑADO CONDUCTION SYSTEM
## HYDRAULIC AXIS IN YESO RIVER

| | | | | | | | |
|---|---|---|---|---|---|---|---|
| C | 12-12-07 | Information | R. Saraiva | A. Ugarte/ R.Caro / H. Mery | E. Woolvett | R. Bennewitz / A. Lyngra | P.Alvarado |
| B | 12-12-07 | Internal Coordination | R. Saraiva | A. Ugarte / H. Mery | E. Woolvett | R. Bennewitz / A. Lyngra | |
| A | 12-12-07 | Information | R. Saraiva | A. Ugarte / H. Mery | E. Woolvett | R. Bennewitz / A. Lyngra | P.Alvarado |
| ISSUING | DATE | PURPOSE OF ISSUING | PREPARED | REVISED | General Coordinator APROVED | Project D. Attached APROVED | Project J. AES GENER APPROVED |

CONSULTANTS

**REVIEW**

B

**N°: 020-HI-INF-012**

# INDEX

| ITEM | CONTENT | PAGE. |
|---|---|---|
| 1. | INTRODUCTION | 1 |
| 2. | OBJECTIVES AND SCOPE | 2 |
| 3. | CALCULATION BASIS | 3 |
| 3.1 | Hydraulic axis in natural flows | 3 |
| 3.2 | Flood flows | 5 |
| 3.3 | Transversal sections of the flow | 5 |
| 3.4 | Roughness coefficient | 8 |
| 3.5 | Edge conditions | 10 |
| 4. | RESULTS | 11 |
| 4.1 | Hydraulic axis at intake zone | 11 |
| 4.2 | Hydraulic axis at siphon zone | 14 |
| 5. | CONCLUSIONS | 17OC |

## 1. INTRODUCTION

The Alfalfal II Power Plant works contemplate the collection of waters of the Volcán river upper basin, through four intakes (El Morado, Las Placas, Colina and La Engorda), to conduct them through a tunnel (El Volcán) up to a forebay located at the south bank of the Yeso River. This forebay receives the flow collected downstream the El Yeso reservoir as well, which added to the one coming from the Volcán river basin, is taken through a group of conditions, in pressure, up to entering into a window of constructions where the adduction tunnel starts in the power plant. In Figure 1.1, the scheme of the power plant works is shown.

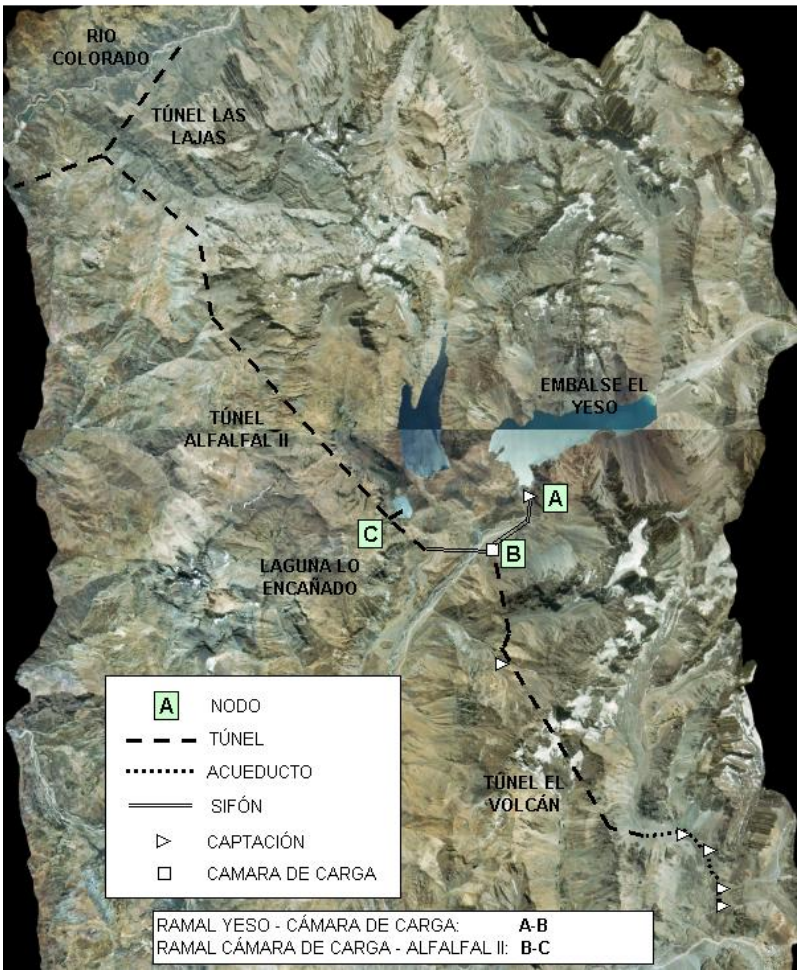


Figure 1.1: General scheme of Alfalfal II Power Plant works.

## 2. OBJECTIVES AND SCOPES

The objective of this report is to present the results obtained in the calculation of the hydraulic axis of the Yeso river, in natural condition, in the area where the intake would be located (at 400 m downstream the El Yeso reservoir) and at the carry out of the cross siphon of this river.

# 3. CALCULATION BASIS

## 3.1 Hydraulic axis en natural flow

The calculation of the hydraulic axis in a river (non-prismatic channel) corresponds to determine the elevation of the free surface along the flow, from its geometric characteristics, roughness of the river bed and its banks, and its flows.

In order to calculate the hydraulic axis in the Colorado River, the program HEC-RAS 3.1.3 (2005) of the U.S. Army Corps of Engineer's has been used, which solves the equation of power balance (Eq. 3.1.1) through the standard pass method.

$$h_2 + Z_2 + \frac{\alpha_2 V_2^2}{2g} = h_1 + Z_1 + \frac{\alpha_1 V_1^2}{2g} + h_e \qquad \text{(Eq.3.1.1)}$$

Where:

| | | |
|---|---|---|
| $h_i$ | : | Height in section i |
| $Z_i$ | : | Elevation from bottom in section i |
| $\alpha_i$ | : | Coriolis Coefficient in section i |
| $V_i$ | : | Speed in section i |
| he | : | Load loss |

In this case the water level in section “i” is $Z_{hi}$:

$$Z_{hi} = h_i + Z_i \qquad \text{(Eq.3.1.2)}$$

The load loss ($h_e$) between two sections corresponds to a frictional loss plus the loss by contraction or expansion (singular losses). The equation for load losses is the following:

$$h_e = \langle J \rangle \cdot L + C \cdot \left| \frac{\alpha_2 V_2^2}{2g} - \frac{\alpha_1 V_1^2}{2g} \right| \qquad \text{(Eq.3.1.2)}$$

Where:

| | | |
|---|---|---|
| <J> | : | Slope of the load loss between two transversal sections |
| L | : | Distance between transversal sections |
| $\alpha_i$ | : | Coriolis Coefficient in section i |
| $V_i$ | : | Speed in section i |
| C | : | Load loss coefficient by contraction or expansion |

The contraction and expansion depend on the transition nature. In general, along a natural flow, the transitions or geometric changes are gradual, whereby high load losses are not made. According to the literature, it is recommended for gradual transitions, an expansion coefficient of 0.3 and contraction of 0.1.

For calculation of frictional losses, the program considers the method called "Average Conveyance Equation" (Average Hydraulic Conductivity Coefficient). Its expression is the following:

$$< J > = \left( \frac{2Q}{K_1 + K_2} \right)^2 \qquad \text{(Eq.3.1.3)}$$

$$K = \frac{A \cdot R^{2/3}}{n} \qquad \text{(Eq.3.1.4)}$$

Where:

| | | |
|---|---|---|
| $K_i$ | : | Hydraulic conductivity coefficient of section i |
| R | : | Hydraulic radius |
| n | : | Manning's roughness coefficient |

The load loss slope in each section is calculated according to the Manning's equation.

$$Q = \frac{\sqrt{J}}{n} \cdot R^{2/3} \cdot A = \sqrt{J} \cdot K \qquad \text{(Eq.3.1.4)}$$

## 3.2 Flood flows

The flow used for the calculation of the hydraulic axis corresponds to the design of the El Yeso Reservoir landfill, that is to say 80 $m^3/s$.

## 3.3 Transversal sections of the flow

From the topographic survey, scale 1:1.000, done by Geoexploraciones (2006) for the project, 21 transversal profiles along the Colorado River have been obtained for each zone where the works would be carried out. For the hydraulic study of each place, a total longitude of 400 m approximately has been considered, out of which 200 m are situated upstream the zone of location of each work.

In figures 3.3.1 and 3.3.2 the transversal profiles considered for the calculation of the hydraulic axis both in the intake as at the siphon are presented.

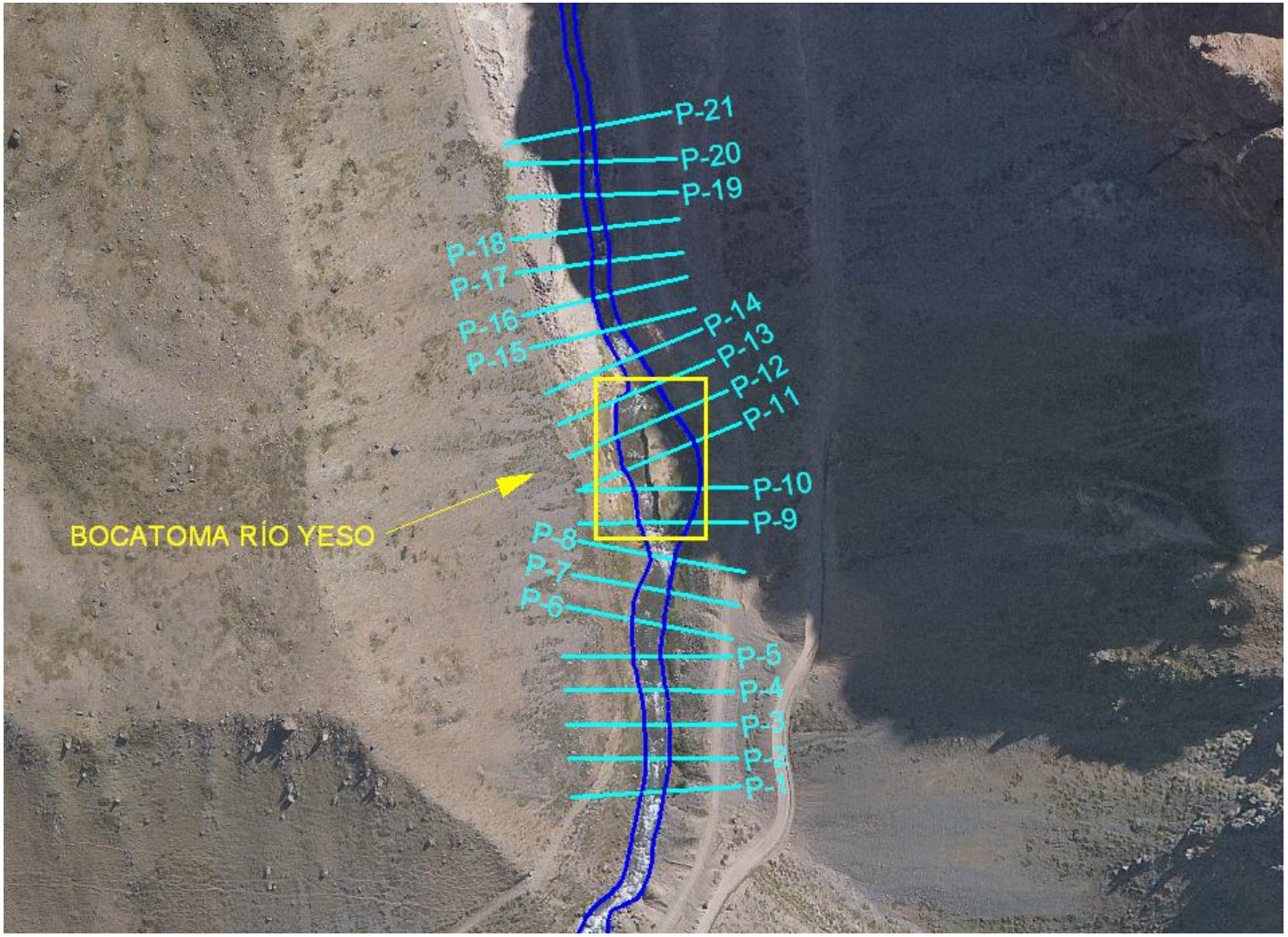


Figure 3.3.1: Location of the transversal profiles at the intake.

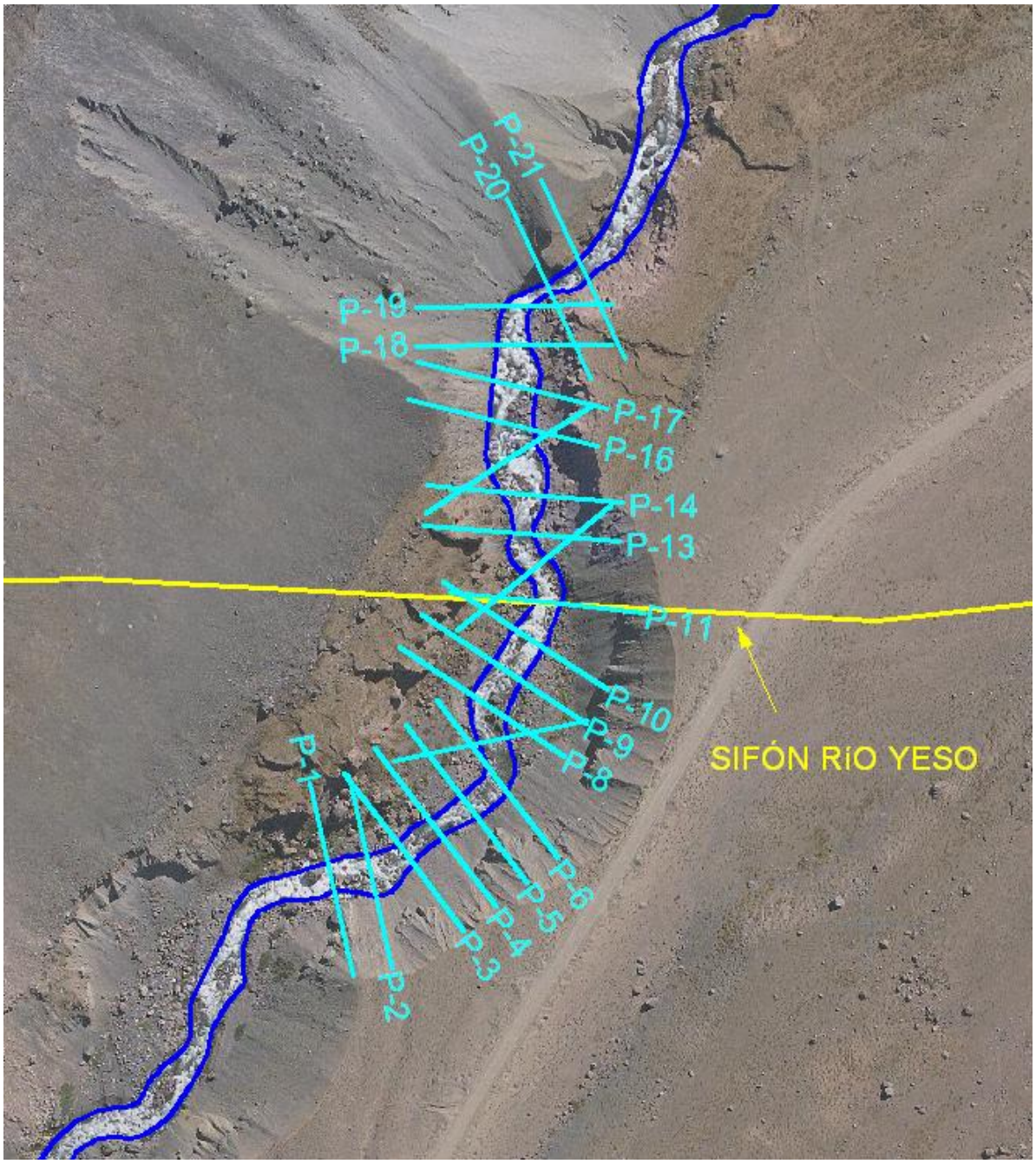


Figure 3.3.2: Location of the transversal profiles for the siphon.

## 3.4 Roughness coefficient

The Yeso River, in the tranche of study, presents a granular river bed, of coarse and extended granulometry, with a well-defined main flow, low presence of curves and scarce vegetation in its banks. Figures 3.4.1 and 3.4.2 correspond to photographs of the river in the studied areas.

In order to determine the roughness coefficient, Cowan's method has been applied in order to estimate roughness of the main flow and of the flood zones in the river banks. The expression for determining Manning's coefficient is the following:

$$n = (n_0 + n_0 + n_0 + n_0) \cdot m_5 \qquad \text{(Eq.3.4.1)}$$

Where:

- $n_0$ : Roughness coefficient base for a straight, uniform and even channel.
- $n_1$ : Irregularity degree of the section
- $n_2$ : Variation of the transversal section
- $n_3$ : Effect of the obstructions
- $n_4$ : Vegetation Presence
- $m_5$ : Correction factor by effect of meanders

The obtained results are presented in the following table:

Table 3.4.1: Roughness coefficient of the Yeso River according to Cowan's method.

| Coefficient | Right Bank | Main Flow | Bank Left |
|---|---|---|---|
| $n_0$ | 0.028 | 0.028 | 0.028 |
| $n_1$ | 0.005 | 0.005 | 0.005 |
| $n_2$ | 0.005 | 0.005 | 0.005 |
| $n_3$ | 0.010 | 0.000 | 0.010 |
| $n_4$ | 0.005 | 0.005 | 0.005 |
| $m_5$ | 1.000 | 1.000 | 1.000 |
| n | 0.043 | 0.043 | 0.043 |

Finally, a value of n=0.045 has been adopted both for the main flow as for the flood plains.

Figure 3.4.1: Yeso river in summer, downstream view

Figure 3.4.2: Yeso river in winter, downstream view

### 3.5 Edge conditions

For calculation of the hydraulic axis is necessary, as well as some other geometric and flow data, to establish conditions of edge according to the existing hydraulic controls in the analyzed flow.

In the case of a run-off of a river, the edge condition is given from downstream, contrary to this, a torrent is considered from upstream.

In this analysis a mixed run-off has been supposed, that is to say, it requires two edge conditions, one upstream and another downstream. The conditions entered to HEC_RAS, in both cases, were of normal height to which the software requires the slopes for its calculation.

# 4. RESULTS

## 4.1 Hydraulic axis at intake zone

Yeso River at the intake carry out area, for a flow of 80 m³/s. Detail of the results is presented in Table 4.1.1.

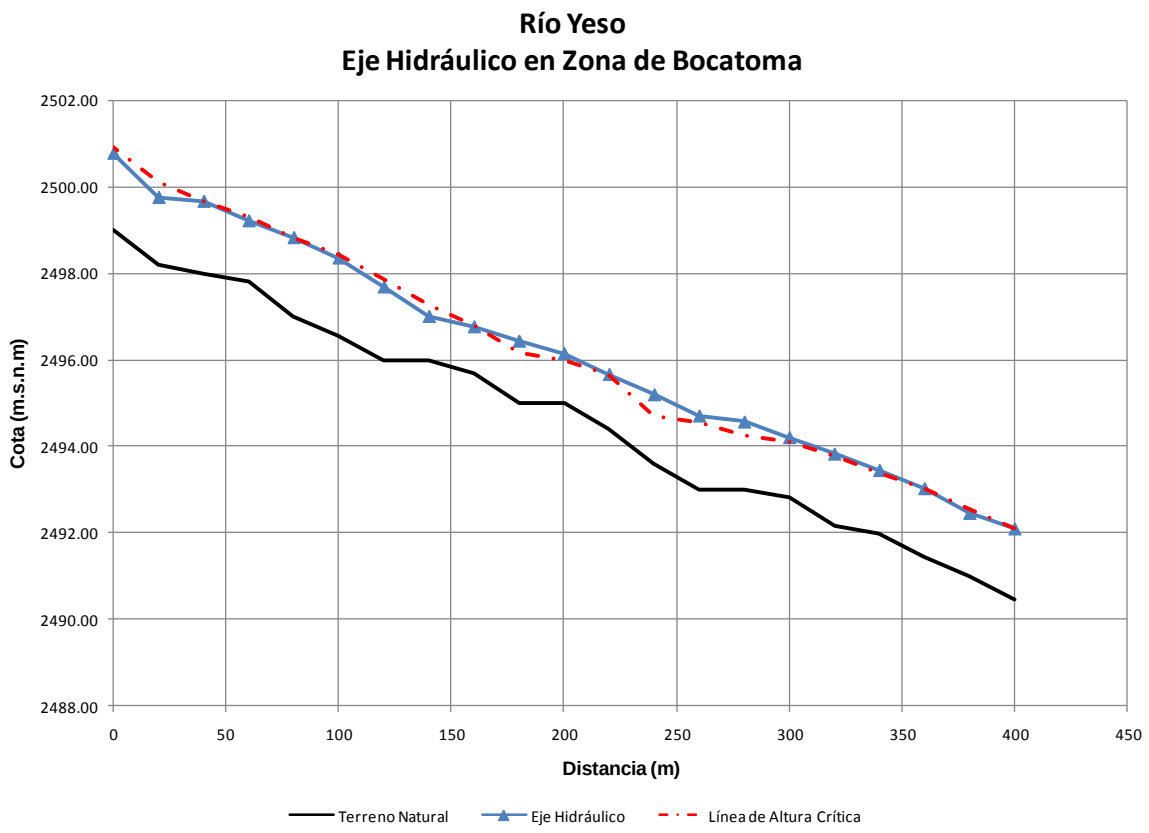


Figure 4.1.1: Yeso river hydraulic axis at intake zone

In figure 4.1.2., the level of the hydraulic axis in Profile 12 is presented which corresponds to the intake axis.

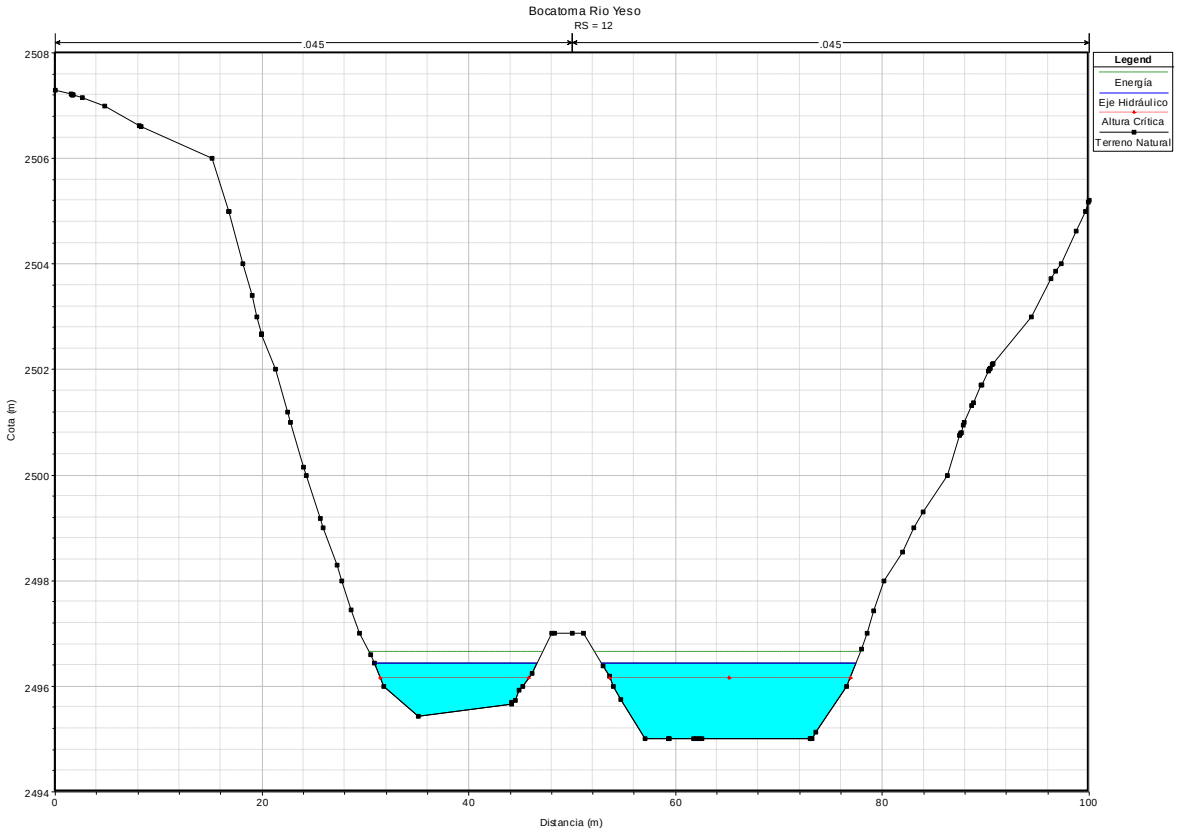


Figure 4.1.2: Results in Profile 12

Table 4.1.1: Results for Q=80 m³/s

| Profile | X (m) | Flow (m³/s) | Bottom Z (m.a.s.l) | Z H (m.a.s.l) | H (m) | Energy Z (m.a.s.l) | Critical Z H (m.a.s.l) | Critical H (m) | Critical Z E (m.a.s.l) | J (m/m) | Speed (m/s) | Area Esc. (m²) | Wet Per (m) | Hydr. Radious (m) | Sup. Width (m) | Froude Nº |
|---|---|---|---|---|---|---|---|---|---|---|---|---|---|---|---|---|
| 1 | 400 | 80 | 2490.47 | 2492.10 | 1.63 | 2492.71 | 2492.11 | 1.64 | 2492.71 | 0.01937 | 3.47 | 23.06 | 19.40 | 1.19 | 18.77 | 1.00 |
| 2 | 380 | 80 | 2491.00 | 2492.46 | 1.46 | 2493.18 | 2492.56 | 1.56 | 2493.17 | 0.02572 | 3.78 | 21.19 | 19.43 | 1.09 | 18.91 | 1.14 |
| 3 | 360 | 80 | 2491.45 | 2493.03 | 1.58 | 2493.64 | 2493.03 | 1.58 | 2493.64 | 0.01929 | 3.45 | 23.17 | 19.57 | 1.18 | 18.87 | 1.00 |
| 4 | 340 | 80 | 2492.00 | 2493.45 | 1.45 | 2494.00 | 2493.39 | 1.39 | 2494.00 | 0.01676 | 3.28 | 24.40 | 20.05 | 1.22 | 19.23 | 0.93 |
| 5 | 320 | 80 | 2492.16 | 2493.83 | 1.67 | 2494.34 | 2493.78 | 1.62 | 2494.34 | 0.01694 | 3.16 | 25.30 | 22.12 | 1.14 | 21.52 | 0.93 |
| 6 | 300 | 80 | 2492.84 | 2494.21 | 1.37 | 2494.67 | 2494.12 | 1.28 | 2494.66 | 0.01533 | 3.00 | 26.62 | 23.33 | 1.14 | 22.77 | 0.89 |
| 7 | 280 | 80 | 2493.00 | 2494.57 | 1.57 | 2494.92 | 2494.26 | 1.26 | 2494.83 | 0.00929 | 2.59 | 30.84 | 23.15 | 1.33 | 22.29 | 0.70 |
| 8 | 260 | 80 | 2493.00 | 2494.71 | 1.71 | 2495.17 | 2494.55 | 1.55 | 2495.14 | 0.01302 | 3.00 | 26.67 | 20.73 | 1.29 | 20.02 | 0.83 |
| 9 | 240 | 80 | 2493.60 | 2495.20 | 1.60 | 2495.35 | 2494.72 | 1.12 | 2495.12 | 0.00475 | 1.72 | 46.47 | 38.98 | 1.19 | 38.35 | 0.50 |
| 10 | 220 | 80 | 2494.40 | 2495.67 | 1.27 | 2496.09 | 2495.67 | 1.27 | 2496.09 | 0.02118 | 2.88 | 27.81 | 33.15 | 0.84 | 32.39 | 0.99 |
| 11 | 200 | 80 | 2495.00 | 2496.15 | 1.15 | 2496.44 | 2496.00 | 1.00 | 2496.41 | 0.01360 | 2.39 | 33.49 | 37.82 | 0.89 | 36.91 | 0.80 |
| 12 | 180 | 80 | 2495.00 | 2496.44 | 1.44 | 2496.64 | 2496.16 | 1.16 | 2496.54 | 0.00710 | 1.93 | 41.39 | 41.11 | 1.01 | 40.31 | 0.61 |
| 13 | 160 | 80 | 2495.70 | 2496.77 | 1.07 | 2497.18 | 2496.78 | 1.08 | 2497.18 | 0.02104 | 2.82 | 28.38 | 34.71 | 0.82 | 34.43 | 0.99 |
| 14 | 140 | 80 | 2496.00 | 2497.01 | 1.01 | 2497.91 | 2497.27 | 1.27 | 2497.80 | 0.04272 | 4.20 | 19.04 | 21.76 | 0.88 | 21.37 | 1.42 |
| 15 | 120 | 80 | 2496.00 | 2497.69 | 1.69 | 2498.58 | 2497.87 | 1.87 | 2498.55 | 0.02723 | 4.19 | 19.09 | 15.63 | 1.22 | 14.88 | 1.18 |
| 16 | 100 | 80 | 2496.55 | 2498.36 | 1.81 | 2499.08 | 2498.42 | 1.87 | 2499.08 | 0.02116 | 3.75 | 21.31 | 17.03 | 1.25 | 16.34 | 1.05 |
| 17 | 80 | 80 | 2497.00 | 2498.83 | 1.83 | 2499.48 | 2498.83 | 1.83 | 2499.48 | 0.01861 | 3.58 | 22.32 | 17.36 | 1.29 | 16.64 | 0.99 |
| 18 | 60 | 80 | 2497.80 | 2499.22 | 1.42 | 2499.92 | 2499.31 | 1.51 | 2499.91 | 0.02435 | 3.69 | 21.67 | 19.73 | 1.10 | 19.18 | 1.11 |
| 19 | 40 | 80 | 2498.00 | 2499.67 | 1.67 | 2500.34 | 2499.67 | 1.67 | 2500.34 | 0.01880 | 3.64 | 21.96 | 16.80 | 1.31 | 15.88 | 0.99 |
| 20 | 20 | 80 | 2498.20 | 2499.76 | 1.56 | 2500.93 | 2500.10 | 1.90 | 2500.76 | 0.04436 | 4.79 | 16.71 | 16.14 | 1.03 | 15.53 | 1.47 |
| 21 | 0 | 80 | 2499.00 | 2500.78 | 1.78 | 2501.60 | 2500.91 | 1.91 | 2501.59 | 0.02430 | 4.02 | 19.90 | 15.91 | 1.25 | 15.16 | 1.12 |

## 4.2 Hydraulic axis at siphon zone

Yeso River at the siphon area, for a flow of 80 m³/s. Detail of the results is presented in Table 4.2.1.

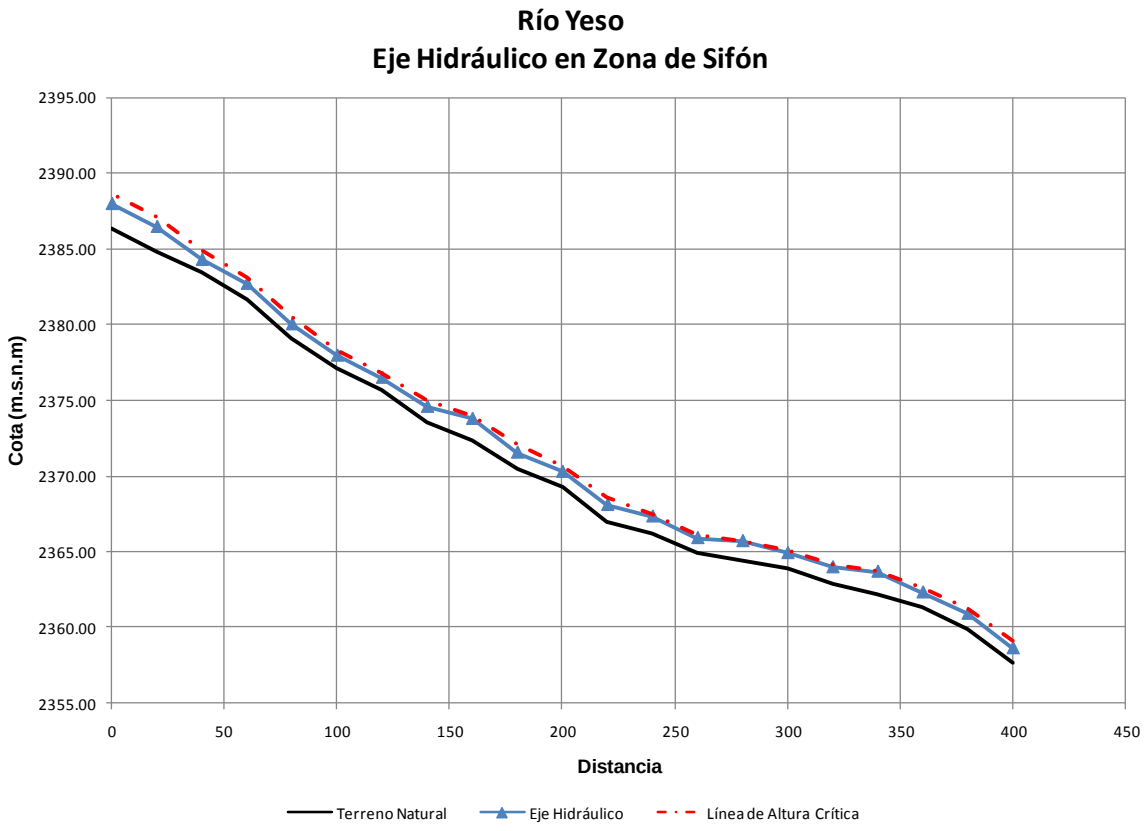


Figure 4.2.1: Yeso river hydraulic axis at the siphon

In figure 4.2.2., the levels of the hydraulic axis in Profile 11 are presented which corresponds to the siphon axis.

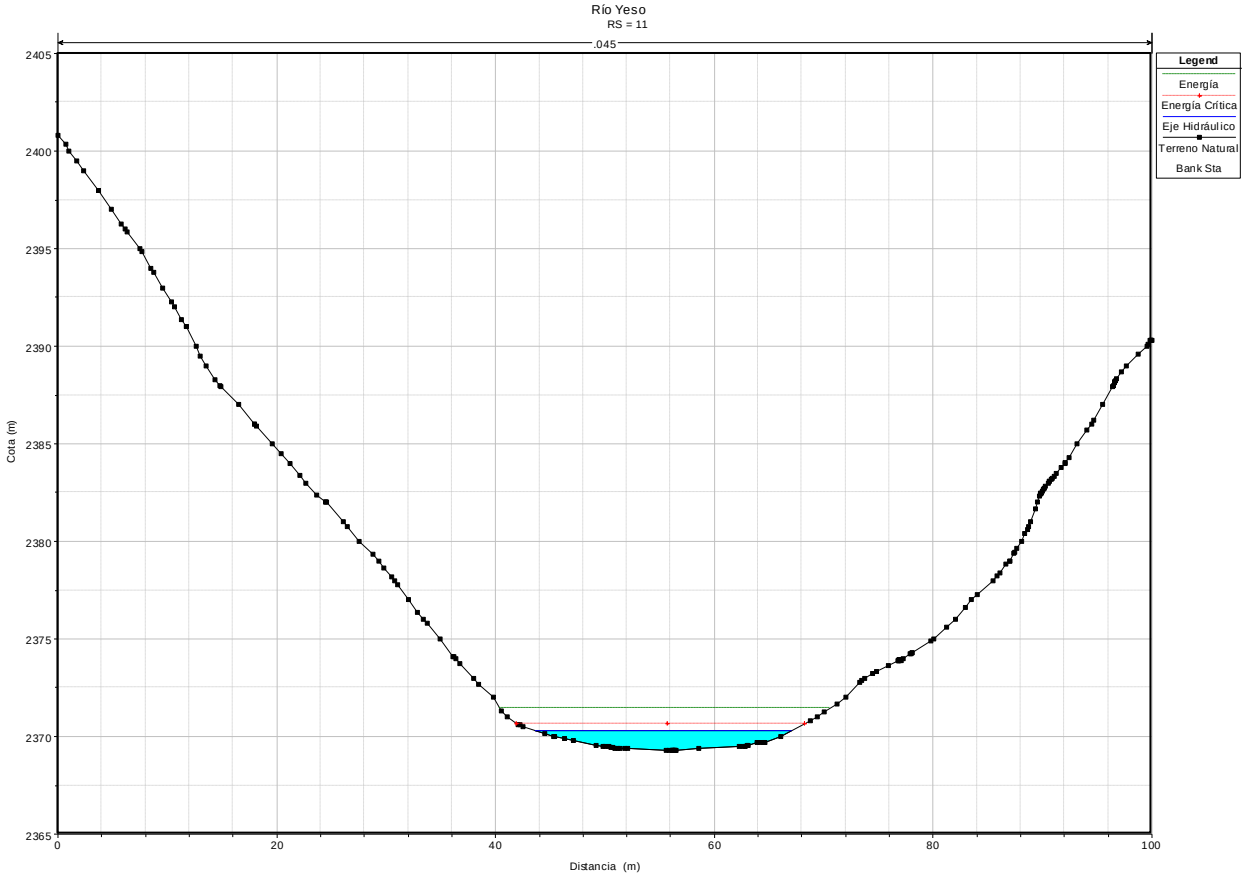


Figure 4.2.2: Results in Profile 11

Table 4.2.1: Results for Q=80 m³/s

| Profile | X (m) | Flow (m³/s) | Bottom Z (m.a.s.l) | Z H (m.a.s.l) | H (m) | Energy Z (m.a.s.l) | Critical Z H (m.a.s.l) | Critical H (m) | Critical Z E (m.a.s.l) | J (m/m) | Speed (m/s) | Esc . Area (m²) | Wet Per. (m) | Hyd.Radious (m) | Sup. Width (m) | Froude N° |
|---|---|---|---|---|---|---|---|---|---|---|---|---|---|---|---|---|
| 1 | 400 | 80 | 2357.68 | 2358.65 | 0.97 | 2360.25 | 2359.13 | 1.45 | 2359.59 | 0.12210 | 5.61 | 14.25 | 23.18 | 0.61 | 22.87 | 2.27 |
| 2 | 380 | 80 | 2359.86 | 2360.93 | 1.07 | 2361.99 | 2361.28 | 1.42 | 2361.75 | 0.06182 | 4.55 | 17.57 | 23.47 | 0.75 | 23.29 | 1.67 |
| 3 | 360 | 80 | 2361.36 | 2362.34 | 0.98 | 2363.43 | 2362.67 | 1.31 | 2363.11 | 0.08741 | 4.62 | 17.33 | 29.41 | 0.59 | 29.18 | 1.91 |
| 4 | 340 | 80 | 2362.19 | 2363.71 | 1.52 | 2364.21 | 2363.71 | 1.52 | 2364.21 | 0.01970 | 3.15 | 25.40 | 25.05 | 1.01 | 24.70 | 0.99 |
| 5 | 320 | 80 | 2362.90 | 2364.00 | 1.10 | 2364.74 | 2364.20 | 1.30 | 2364.67 | 0.03997 | 3.82 | 20.92 | 26.21 | 0.80 | 26.04 | 1.36 |
| 6 | 300 | 80 | 2363.90 | 2364.94 | 1.04 | 2365.60 | 2365.12 | 1.22 | 2365.52 | 0.04529 | 3.60 | 22.23 | 33.48 | 0.66 | 33.35 | 1.41 |
| 7 | 280 | 80 | 2364.39 | 2365.73 | 1.34 | 2366.19 | 2365.73 | 1.34 | 2366.19 | 0.01964 | 3.01 | 26.79 | 29.43 | 0.91 | 29.15 | 0.99 |
| 8 | 260 | 80 | 2364.98 | 2365.93 | 0.95 | 2366.71 | 2366.15 | 1.17 | 2366.55 | 0.06363 | 3.90 | 20.51 | 35.35 | 0.58 | 35.19 | 1.63 |
| 9 | 240 | 80 | 2366.20 | 2367.36 | 1.16 | 2367.84 | 2367.48 | 1.28 | 2367.79 | 0.04790 | 3.06 | 26.11 | 52.23 | 0.50 | 51.87 | 1.38 |
| 10 | 220 | 80 | 2367.00 | 2368.12 | 1.12 | 2369.59 | 2368.57 | 1.57 | 2368.99 | 0.12306 | 5.37 | 14.91 | 26.11 | 0.57 | 25.95 | 2.26 |
| 11 | 200 | 80 | 2369.27 | 2370.31 | 1.04 | 2371.46 | 2370.68 | 1.41 | 2371.16 | 0.07099 | 4.74 | 16.89 | 23.60 | 0.72 | 23.42 | 1.78 |
| 12 | 180 | 80 | 2370.50 | 2371.58 | 1.08 | 2373.28 | 2372.10 | 1.60 | 2372.57 | 0.11611 | 5.77 | 13.88 | 20.88 | 0.66 | 20.69 | 2.25 |
| 13 | 160 | 80 | 2372.40 | 2373.81 | 1.41 | 2374.58 | 2374.02 | 1.62 | 2374.49 | 0.04142 | 3.89 | 20.55 | 25.72 | 0.80 | 25.51 | 1.39 |
| 14 | 140 | 80 | 2373.57 | 2374.61 | 1.04 | 2375.88 | 2375.01 | 1.44 | 2375.48 | 0.08502 | 5.00 | 16.01 | 23.64 | 0.68 | 23.41 | 1.93 |
| 15 | 120 | 80 | 2375.66 | 2376.53 | 0.87 | 2377.46 | 2376.82 | 1.16 | 2377.23 | 0.07582 | 4.26 | 18.80 | 32.40 | 0.58 | 32.11 | 1.78 |
| 16 | 100 | 80 | 2377.17 | 2377.99 | 0.82 | 2379.26 | 2378.37 | 1.20 | 2378.78 | 0.11505 | 5.00 | 16.00 | 29.60 | 0.54 | 29.41 | 2.16 |
| 17 | 80 | 80 | 2379.10 | 2380.06 | 0.96 | 2381.88 | 2380.59 | 1.49 | 2381.10 | 0.13125 | 5.96 | 13.42 | 21.05 | 0.64 | 20.81 | 2.37 |
| 18 | 60 | 80 | 2381.70 | 2382.74 | 1.04 | 2383.92 | 2383.10 | 1.40 | 2383.59 | 0.07832 | 4.81 | 16.64 | 24.49 | 0.68 | 24.27 | 1.85 |
| 19 | 40 | 80 | 2383.50 | 2384.32 | 0.82 | 2386.34 | 2384.88 | 1.38 | 2385.38 | 0.15918 | 6.29 | 12.71 | 21.26 | 0.60 | 21.08 | 2.59 |
| 20 | 20 | 80 | 2384.85 | 2386.50 | 1.65 | 2388.52 | 2387.14 | 2.29 | 2387.87 | 0.08019 | 6.29 | 12.71 | 12.71 | 1.00 | 12.03 | 1.95 |
| 21 | 0 | 80 | 2386.37 | 2388.01 | 1.64 | 2390.05 | 2388.66 | 2.29 | 2389.47 | 0.07239 | 6.32 | 12.65 | 11.63 | 1.09 | 10.64 | 1.85 |

## 5. CONCLUSIONS

In this report the results of the hydraulic axis calculation at Yeso River have been presented in natural state, in the areas where the intake and the siphon would be carried out (see figures 3.3.1. and 3.3.2).

In both cases the run-off in Yeso River for a flow of 80 $m^3/s$ is of torrential type very near to the crisis.

In the intake zone (Profile 12) the run-off height would be 1.44 m and the speed of 1.93 m/s.

In the profile corresponding to the cross of Yeso river (Profile 11) speed would reach 4.70 m/s while the height would be 1.04m.

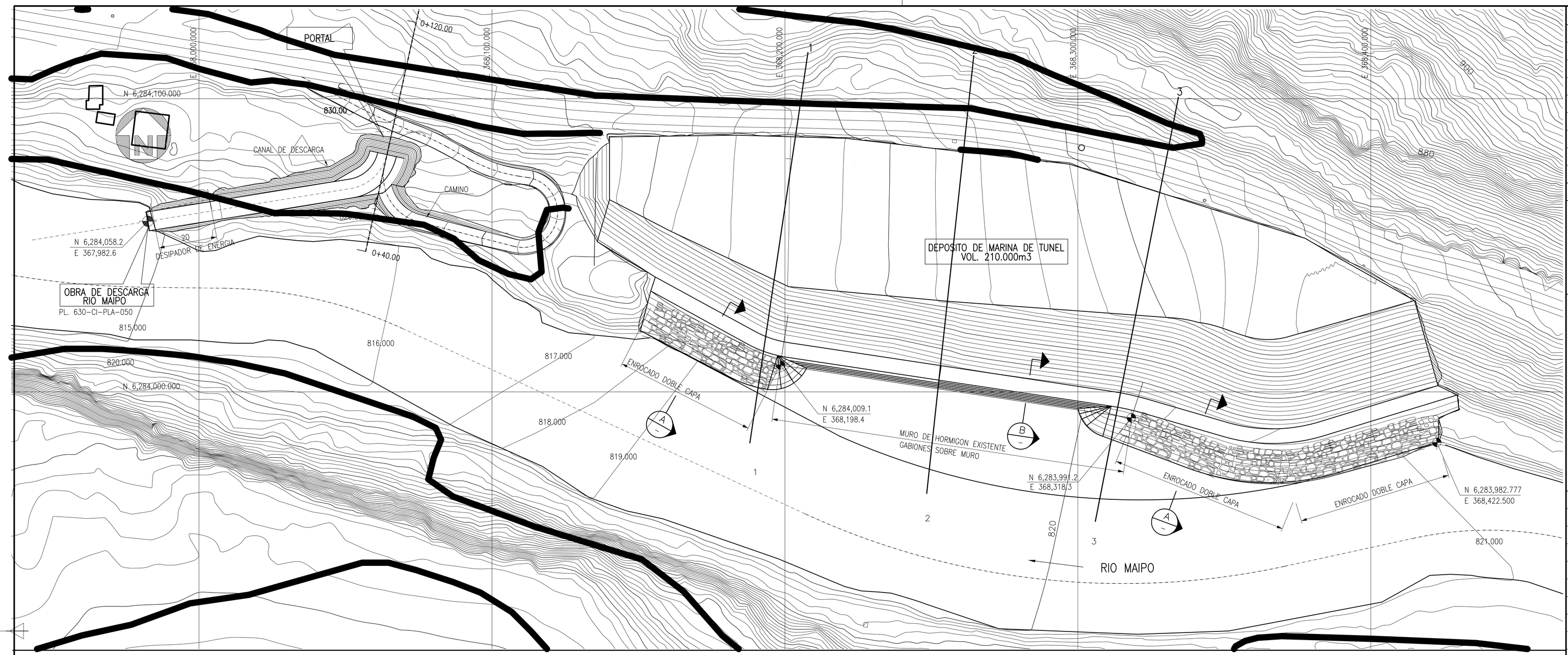


PLANTA
ESC.1:750

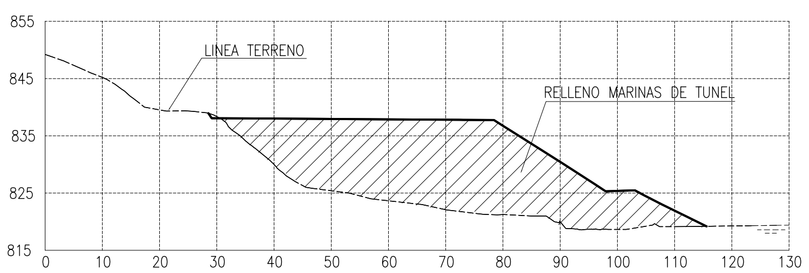


PERFIL "1"
ESC.1:750

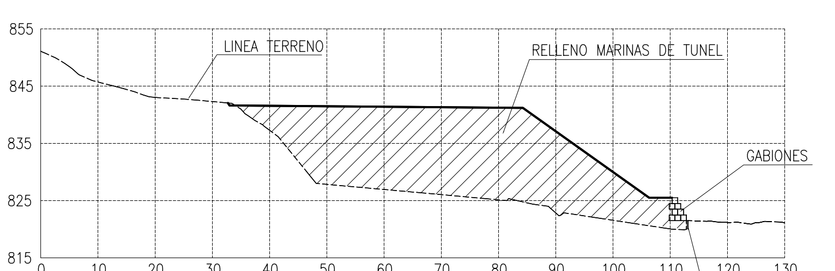


PERFIL "2"
ESC.1:750

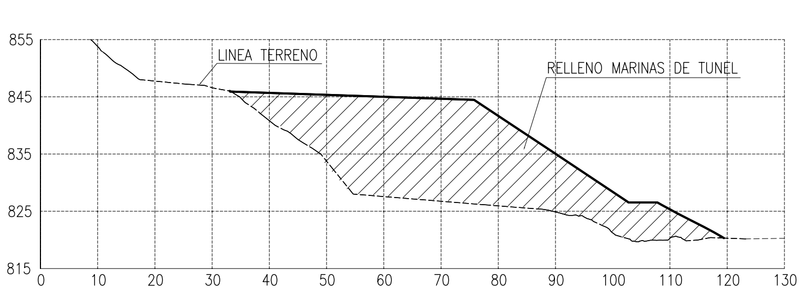


PERFIL "3"
ESC.1:750

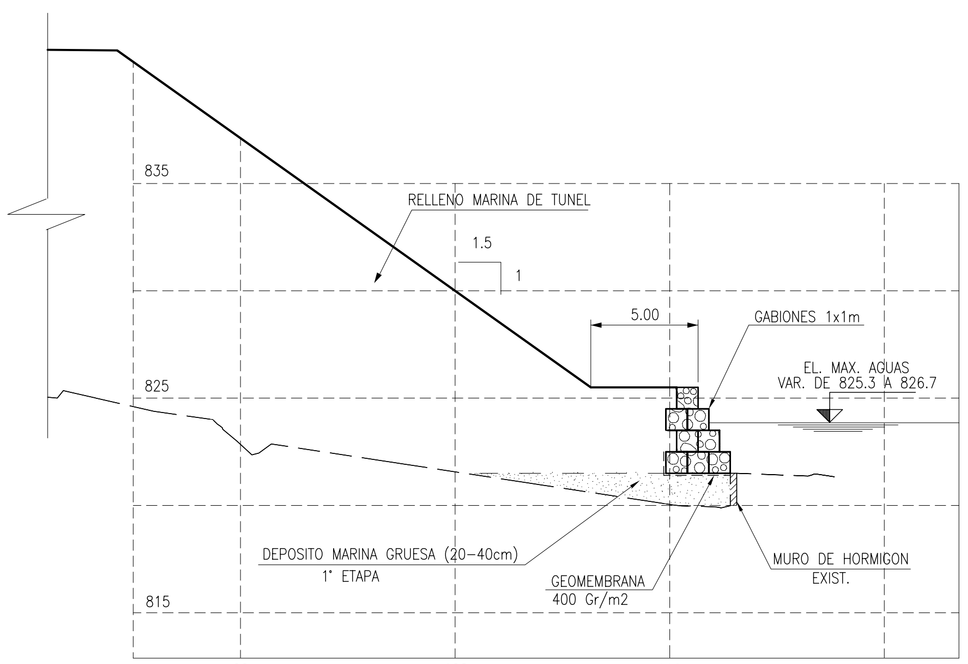


SECCION B
ESC.1:200

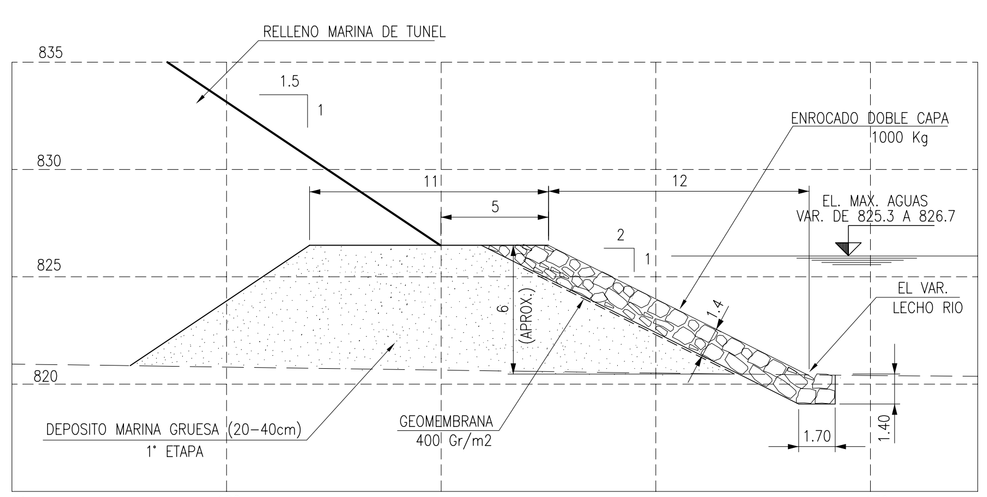


SECCION A
ESC.1:200

REFERENCIAS / ESTANDARES

| NUMERO | DESCRIPCION |
|---|---|

SIMBOLOGIA

EMISIONES

| EMI | FECHA | DESCRIPCION | PROY | REV | APR | APR |
|---|---|---|---|---|---|---|
| A | 09/05/08 | INFORMACION | CC/JC | HJ | EW | AL/RB |

REVISIONES

| REV | FECHA | DESCRIPCION | PROY | REV | APR | APR |
|---|---|---|---|---|---|---|
| A | 09/05/08 | REVISION GENERAL | CC/JC | HJ | EW | AL/RB |

Gener
una empresa AES

PROYECTO
HIDROELECTRICO ALTO MAIPO
INGENIERIA BASICA

cade-idepe
Norconsult
POCH Ingeniería

AREA 630 — OBRAS CENTRALES LAS LAJAS

TITULO
OBRAS SUPERFICIALES LAS LAJAS
DEFENSA FLUVIAL, DEPOSITO MARINA
DESCARGA RIO MAIPO

ESCALA: Indicadas

| | NOMBRE | FIRMA | FECHA |
|---|---|---|---|
| PROY. | CC/JC | | 29-04-08 |
| REV. | HJ | | 29-04-08 |
| APR. | EW | | 29-04-08 |
| APR. | AL/RB | | 29-04-08 |

No PLANOS GCAM: 630-CI-PLA-049
REV. A

EMISION N° | FECHA EMISION $DATE$ | HORA $TIME$

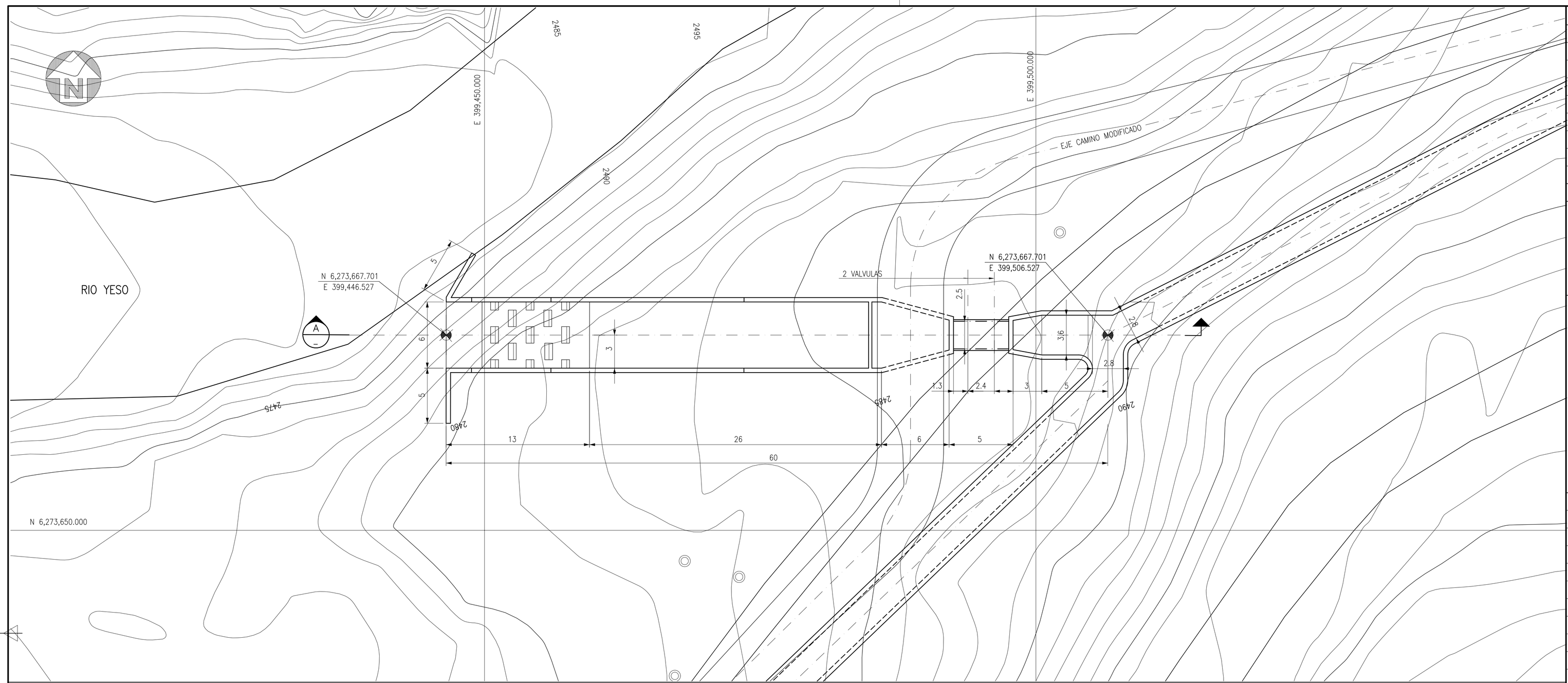


## PLANTA
ESC.1:200

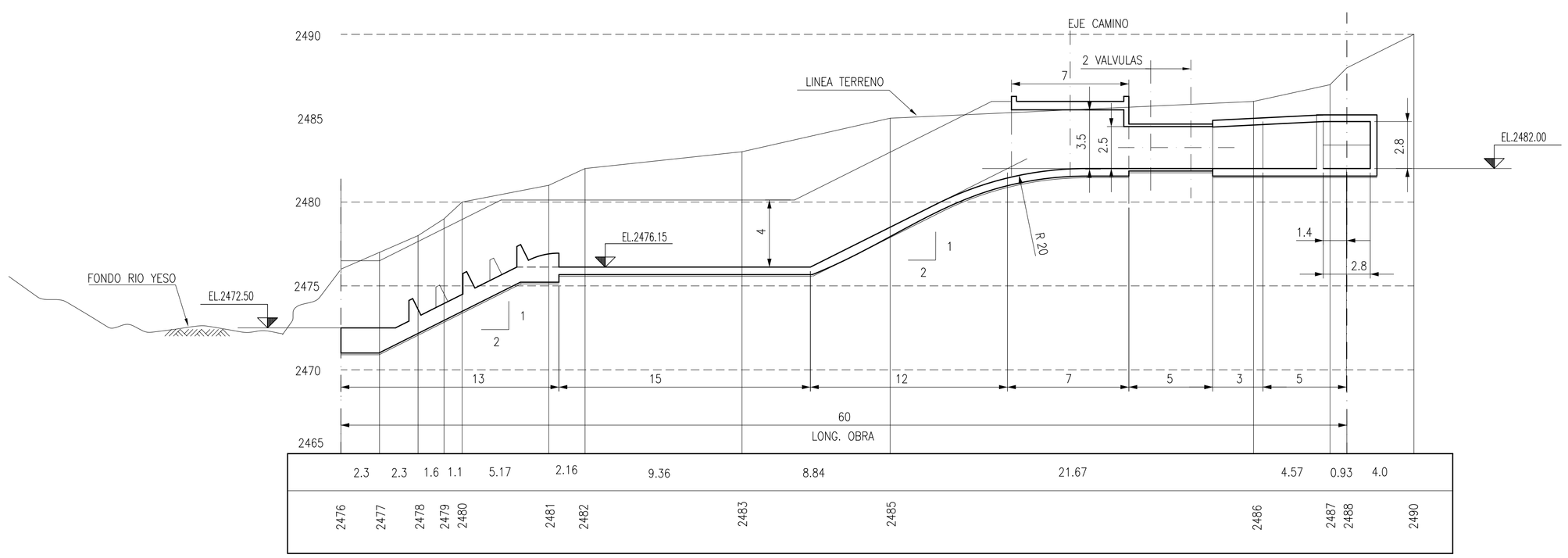


## SECCION A
ESC.1:200

### REFERENCIAS / ESTANDARES

| NUMERO | DESCRIPCION |
|---|---|
| 020-CI-PLA-028 | DISPOSICION GENERAL |

### SIMBOLOGIA

### EMISIONES

| EMI | FECHA | DESCRIPCION | PROY | REV | APR | APR |
|---|---|---|---|---|---|---|
| C | 15/12/07 | APROBACION Y COMENTARIOS | CC/FD | HJ | EW | AL/RB |
| B | 05/12/07 | INFORMACION | CC/FD | HJ | EW | AL/RB |
| A | 01/12/07 | INFORMACION | CC/FD | HJ | EW | AL/RB |

### REVISIONES

| REV | FECHA | DESCRIPCION | PROY | REV | APR | APR |
|---|---|---|---|---|---|---|
| B | 05/12/07 | DISEÑO CONCEPTUAL | CC/FD | HJ | EW | AL/RB |
| A | 01/12/07 | REVISION GENERAL | CC/FD | HJ | EW | AL/RB |

Gener una empresa AES

PROYECTO
HIDROELECTRICO ALTO MAIPO
INGENIERIA BASICA

cade-idepe · POCH Ingeniería · Norconsult

AREA 020 — ESTUDIOS BASICOS DISEÑO CONCEPTUAL

TITULO
OBRAS SUPERFICIALES EL YESO
OBRA DESCARGA A RIO YESO
PLANTA Y SECCION

ESCALA 1:200

| | NOMBRE | FIRMA | FECHA |
|---|---|---|---|
| PROY. | CC/FD | | 29-11-07 |
| REV. | HJ | | 29-11-07 |
| APR. | EW | | 29-11-07 |
| APR. | AL/RB | | 29-11-07 |

No PLANOS GCAM: 020-HI-PLA-025

REV. B

HORA $TIME$ FECHA $DATE$ EMISION Nº

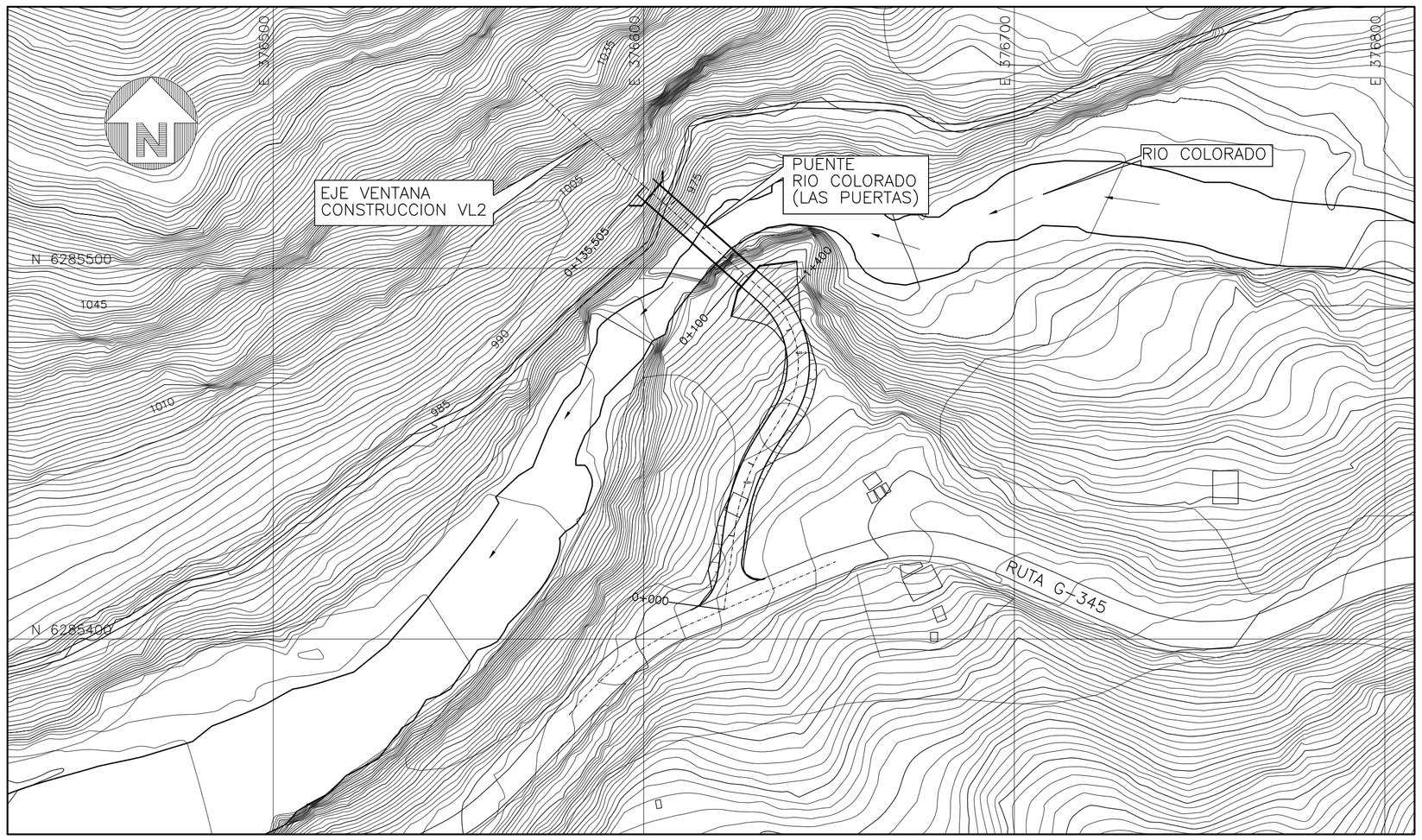


## PLANTA PUENTE

ESC. 1:1000

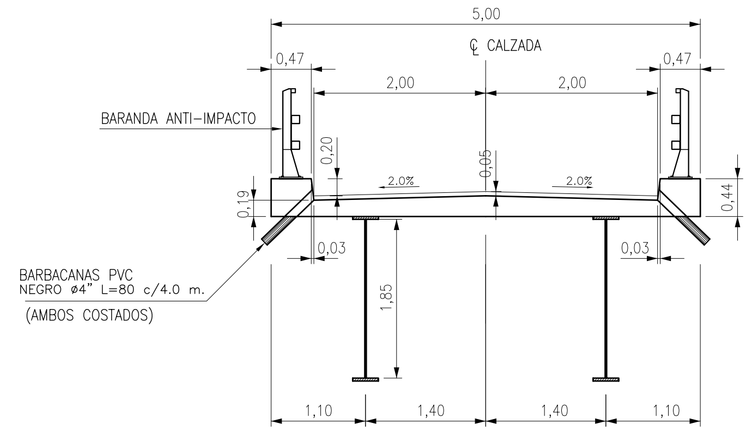


## SECCION TRANSVERSAL DEL TABLERO

ESC. 1:50

## VISTA GENERAL PUENTE (L=30m)

ESC. 1:200

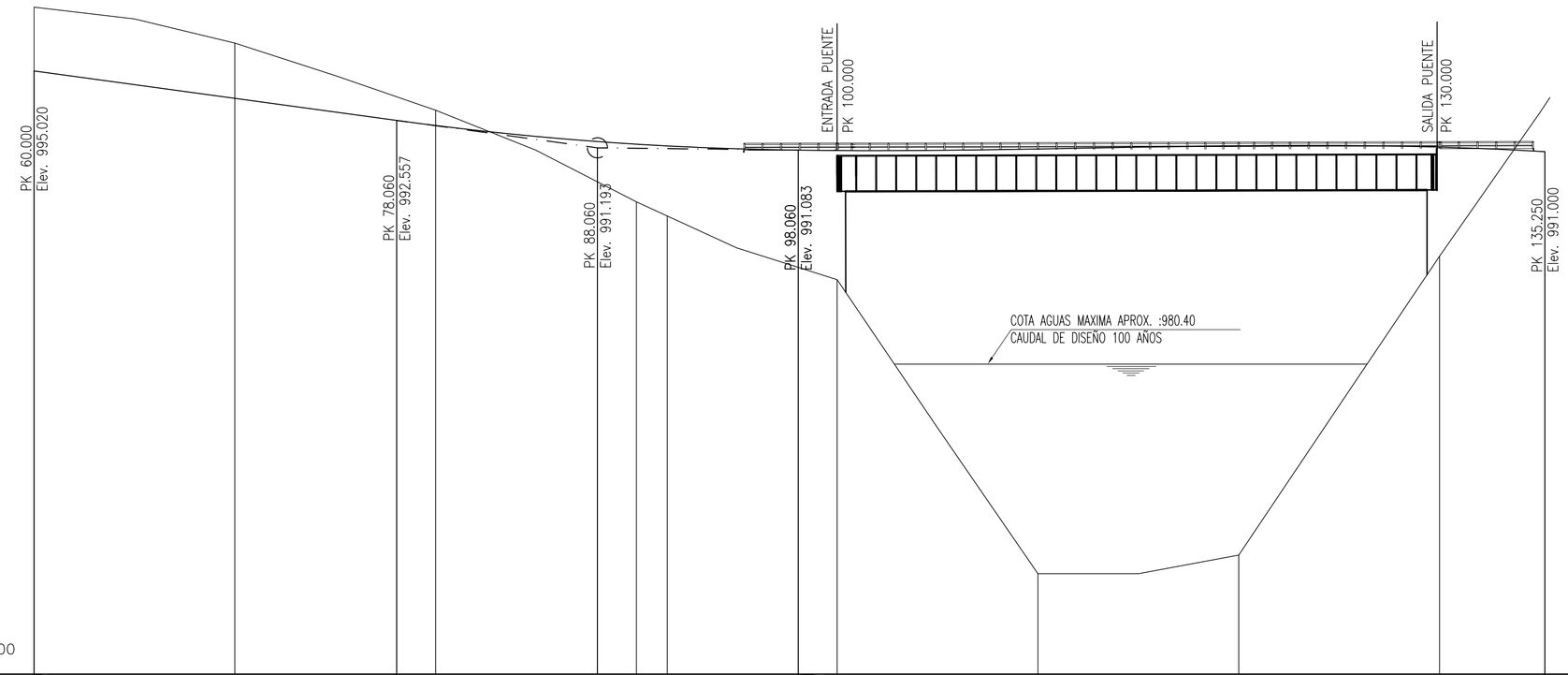


| | | | | | | | | |
|---|---|---|---|---|---|---|---|---|
| GRADIENTES | i=-13.640 % En 68.060 m | | 2T= 20.0 m K= 159.5 | | i=-0.223 % En 37.190 m | | | |
| RASANTE | 995.020 | 993.656 | 992.304 | 991.375 991.288 | 991.079 | 991.056 | 991.034 | 991.012 |
| TERRENO | 998.194 | 996.405 | 993.063 | 988.504 987.800 | 984.633 | 970.000 | 970.926 | 985.797 |
| PARCIALES | 60.000 | 70.000 | 80.000 | 90.000 91.537 | 100.000 | 110.000 | 120.000 | 130.000 |
| DISTANCIA ENTRE ESTACIONES | 60 | | | | | | | 136 |
| DIAGRAMA DE CURVATURAS | | | R=25.000 Dc=35.233 | | Recta en 43.967 m | | | |

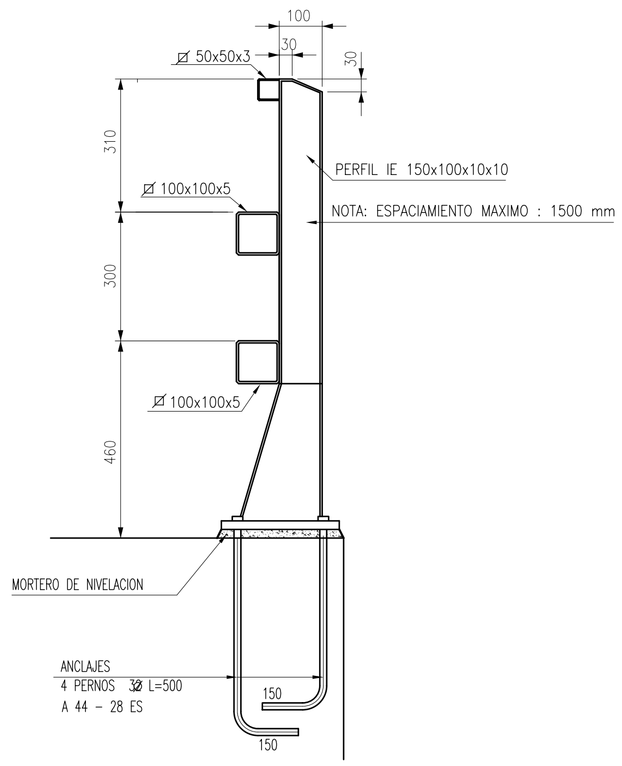


## DETALLE BARANDA ANTIMPACTO (GALVANIZADA EN CALIENTE)

ESC. 1:10 UNIDADES EN mm.(SIC)

### REFERENCIAS / ESTANDARES

| NUMERO | DESCRIPCION |
|---|---|
| | |
| | Descripcion plano referencia 7 |

### SIMBOLOGIA

NOTAS:

1.- Las Dimensiones son Referenciales y Serán Definidas por Cálculo Estructural

### EMISIONES

| EMI | FECHA | DESCRIPCION | PROY | REV | APR | APR |
|---|---|---|---|---|---|---|
| C | 17/12/07 | Aprobacion y Cometarios | DG/JC | JC | EW | AL/RB |
| B | 15/12/07 | Para Información | DG/JC | JC | EW | AL/RB |
| A | 05/12/07 | Coordinacion Interna | DG/JC | JC | EW | AL/RB |

### REVISIONES

| REV | FECHA | DESCRIPCION | PROY | REV | APR | APR |
|---|---|---|---|---|---|---|
| B | 17/12/07 | Revision General | DG/JC | JC | EW | AL/RB |
| A | 05/12/07 | Revisión General | DG/JC | JC | EW | AL/RB |

Gener una empresa AES

PROYECTO
HIDROELECTRICO ALTO MAIPO
INGENIERIA BASICA

cade-idepe · POCH Ingeniería · Norconsult

AREA 020 — ESTUDIOS BASICOS DISEÑO CONCEPTUAL

TITULO
PUENTE RIO COLORADO (LAS PUERTAS)
ACCESO VENTANA VL2
VISTA GENERAL Y TABLERO

| ESCALA | | NOMBRE | FIRMA | FECHA |
|---|---|---|---|---|
| Indicadas | PROY. | DG | | 05/12/07 |
| | REV. | JC | | 05/12/07 |
| | APR. | EW | | 05/12/07 |
| | APR. | RB/AL | | 05/12/07 |

No PLANOS GCAM: 020-CA-PLA-028 — REV. B

EMISION N° · FECHA EMISION $DATE$ · HORA $TIME$

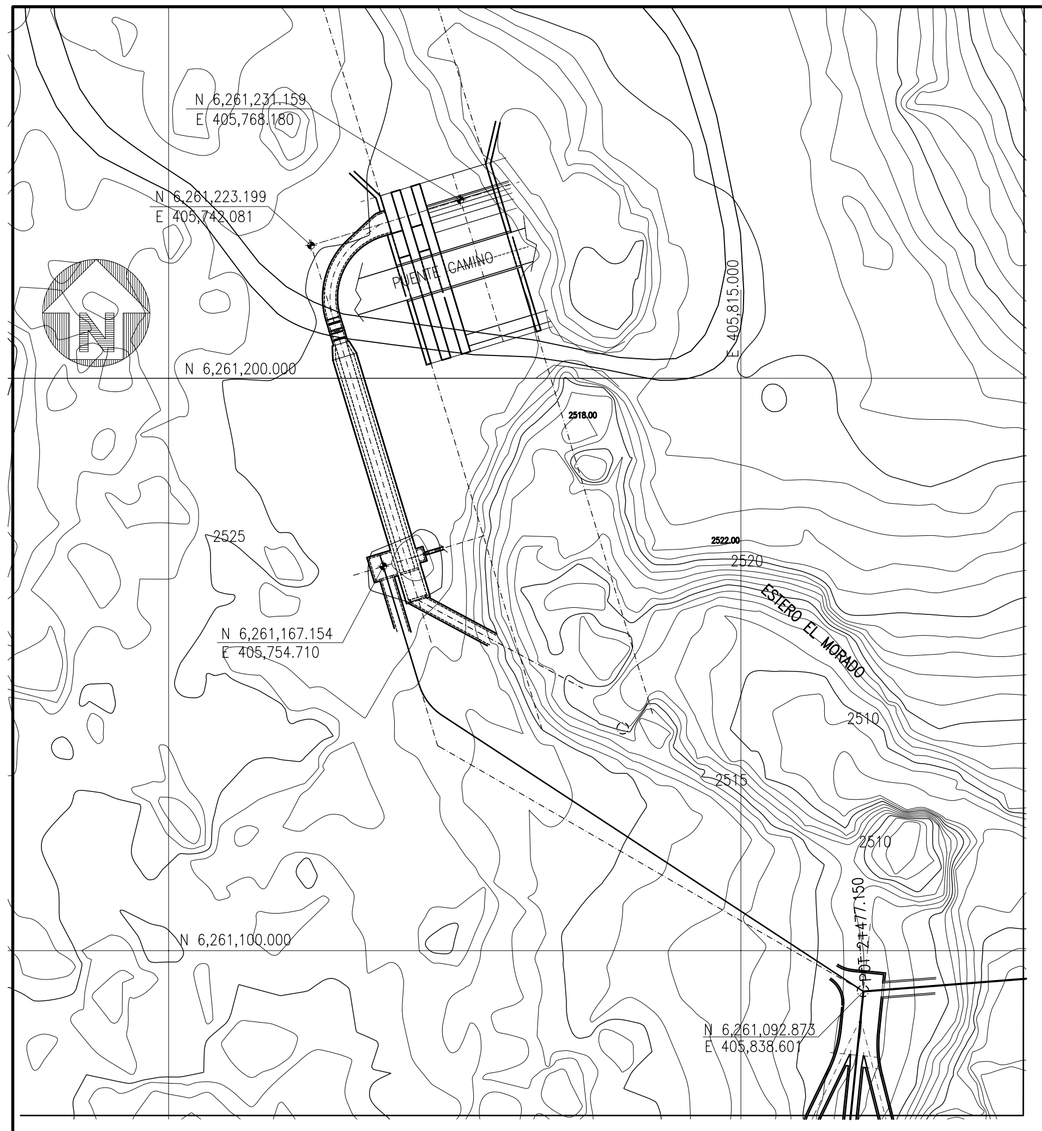


PLANTA
ESC.1:750

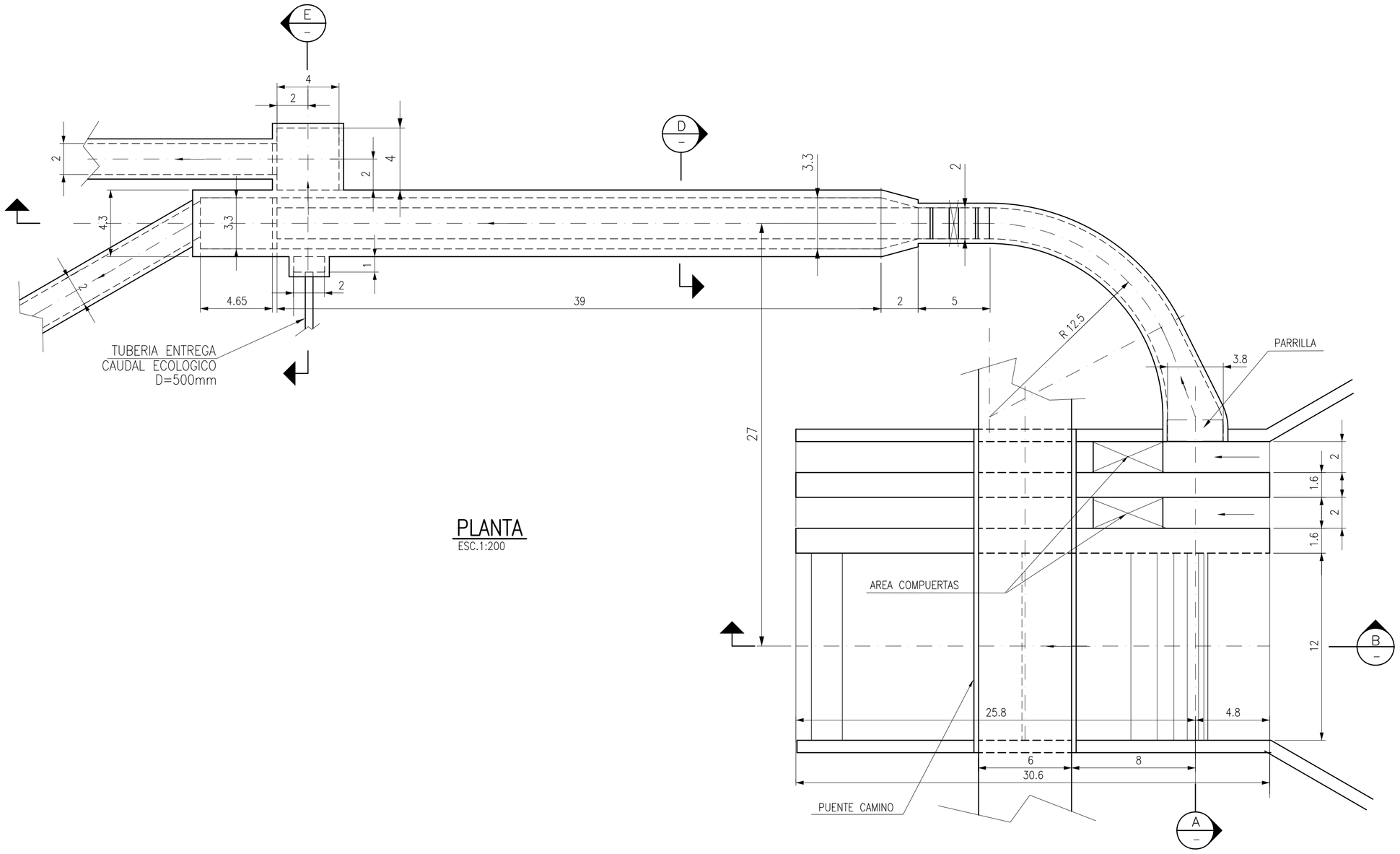


PLANTA
ESC.1:200

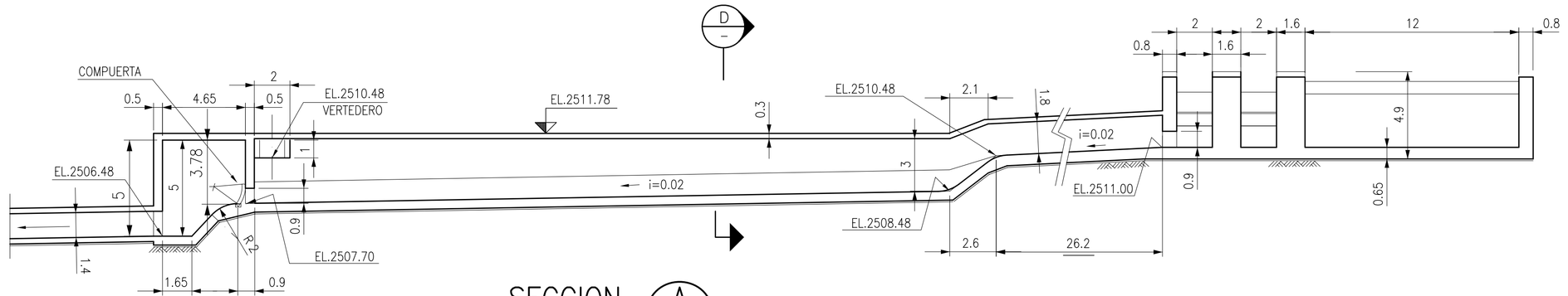


SECCION A
ESC.1:250

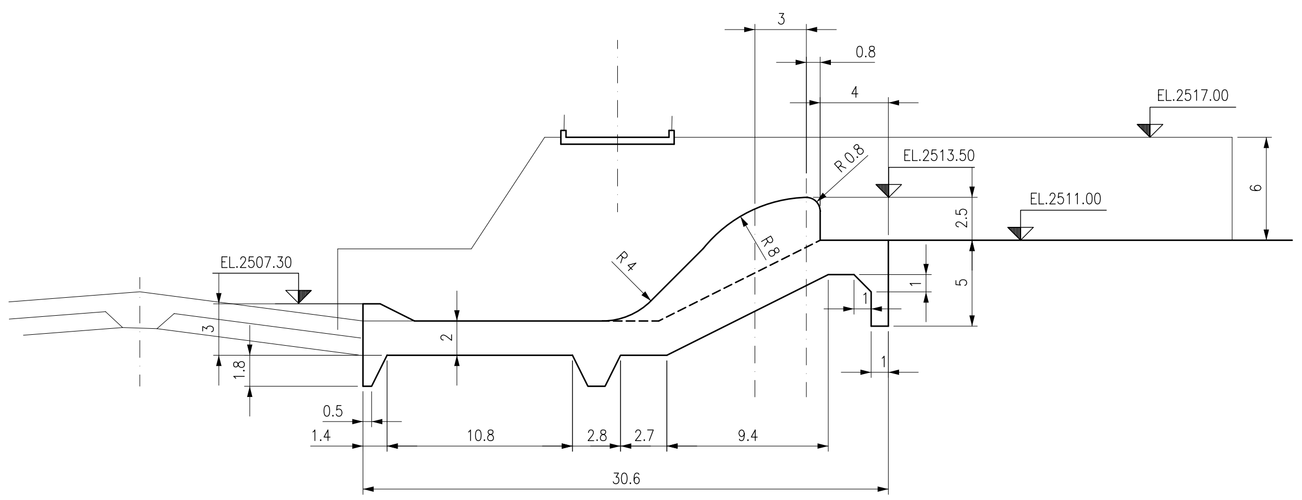


SECCION B
ESC.1:250

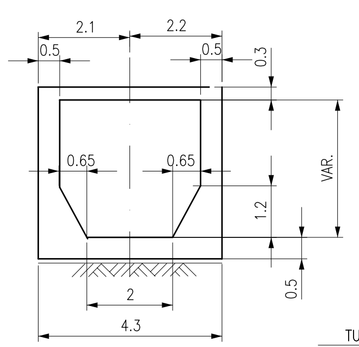


SECCION D
ESC.1:100

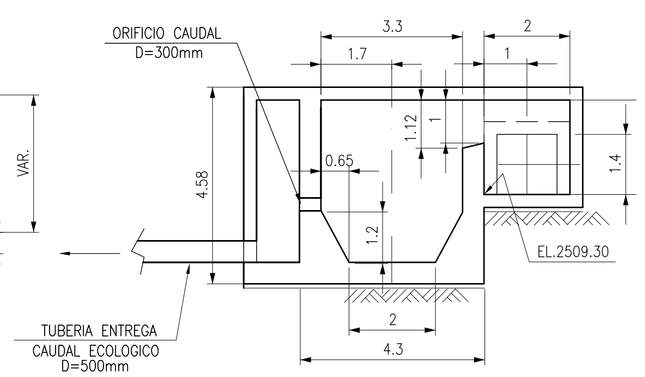


SECCION E
ESC.1:100

REFERENCIAS / ESTANDARES

| NUMERO | DESCRIPCION |
|---|---|
| 020-CI-PLA-005 | DISPOSICION GENERAL |

SIMBOLOGIA

EMISIONES

| EMI | FECHA | DESCRIPCION | PROY | REV | APR | APR |
|---|---|---|---|---|---|---|
| C | 15/12/07 | APROBACION Y COMENTARIOS | CC/FD | HJ | EW | AL/RB |
| B | 05/12/07 | INFORMACION | CC/FD | HJ | EW | AL/RB |
| A | 27/11/07 | PARA INFORMACION | CC/FD | HJ | EW | AL/RB |

REVISIONES

| REV | FECHA | DESCRIPCION | PROY | REV | APR | APR |
|---|---|---|---|---|---|---|
| C | 15/12/07 | REVISION GENERAL | CC/FD | HJ | EW | AL/RB |
| B | 05/12/07 | DISEÑO CONCEPTUAL | CC/FD | HJ | EW | AL/RB |
| A | 27/11/07 | REVISION GENERAL | CC/FD | HJ | EW | AL/RB |

Gener una empresa AES

PROYECTO
HIDROELECTRICO ALTO MAIPO
INGENIERIA BASICA

cade-idepe · POCH Ingeniería · Norconsult

AREA 020 — ESTUDIOS BASICOS DISEÑO CONCEPTUAL

TITULO
OBRAS SUPERFICIALES EL VOLCAN
CAPTACION ESTERO EL MORADO
BOCATOMA, REJA Y VERTEDERO

| ESCALA | | NOMBRE | FIRMA | FECHA |
|---|---|---|---|---|
| Indicadas | PROY. | CC/FD | | 26-09-07 |
| | REV. | HJ | | 26-09-07 |
| | APR. | EW | | 26-09-07 |
| | APR. | AL/RB | | 26-09-07 |

No PLANOS GCAM: 020-HI-PLA-004 — REV. C

EMISION N° · FECHA EMISION $DATE$ · HORA $TIME$

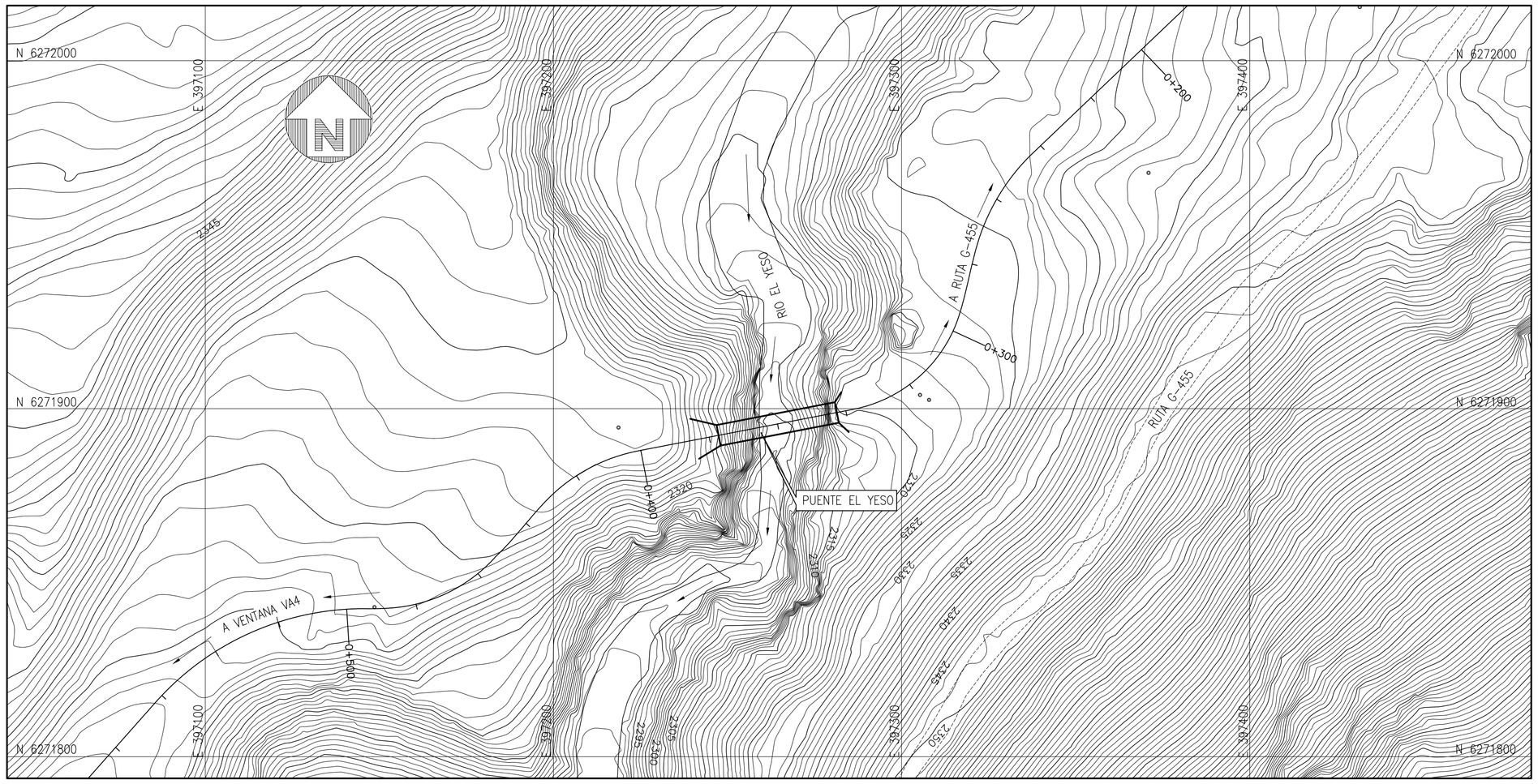


## PLANTA PUENTE

ESC. 1:1000

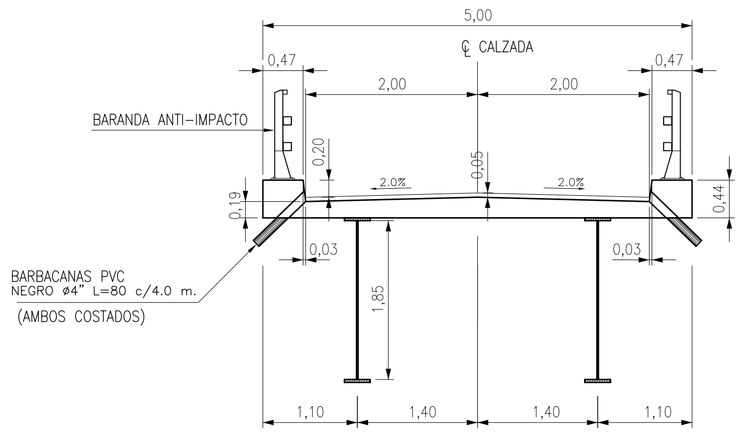


## SECCION TRANSVERSAL DEL TABLERO

ESC. 1:50

## VISTA GENERAL PUENTE (L=30m)

ESC. 1:200

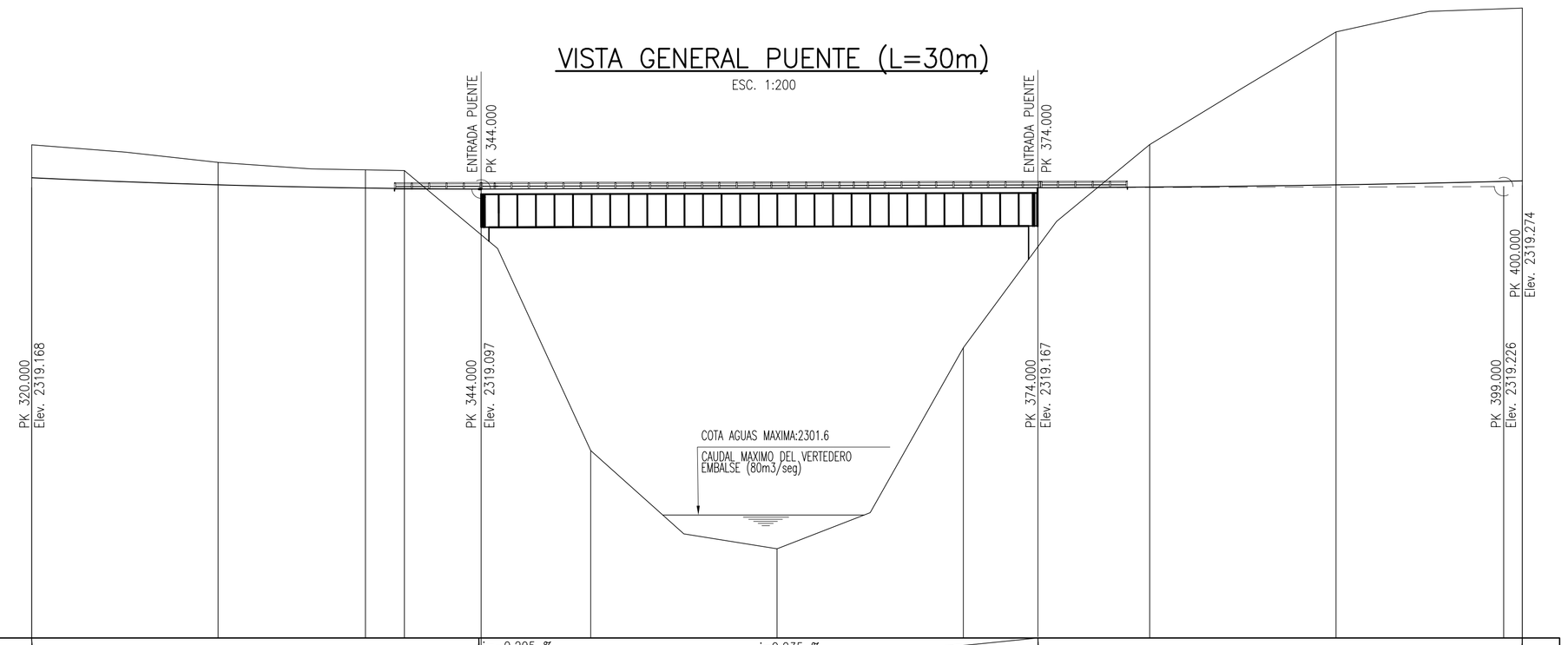


| | | | | | | | | | |
|---|---|---|---|---|---|---|---|---|---|
| GRADIENTES | 2T= 50.0 m K= 538.1 | | | i=-0.295 % | i=0.235 % En 29.880 m | | | 2T= 50.0 m K= 1104.1 | |
| RASANTE | 2319.704 | 2319.321 | 2319.150 | 2319.124 | 2319.111 | 2319.135 | 2319.158 | 2319.198 | 2319.321 | 2319.535 |
| TERRENO | 2321.470 | 2320.525 | 2320.125 | 2320.086 | 2305.062 | 2299.788 | 2310.577 | 2321.483 | 2327.528 | 2328.807 |
| PARCIALES | 320.000 | 330.000 | 337.910 | 340.000 | 350.000 | 360.000 | 370.000 | 380.000 | 390.000 | 400.000 |
| DISTANCIA ENTRE ESTACIONES | 320 | | | | | | | | | 400 |
| DIAGRAMA DE CURVATURAS | R=40.000 Dc=45.544 | | | | Recta en 62.872 m | | | | | |

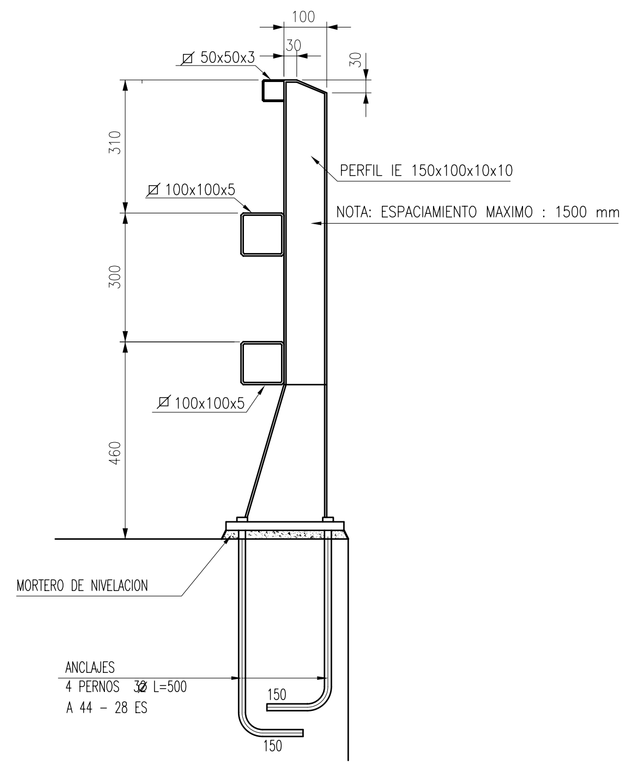


## DETALLE BARANDA ANTIMPACTO (GALVANIZADA EN CALIENTE)

ESC. 1:10 UNIDADES EN mm.(SIC)

REFERENCIAS / ESTANDARES

| NUMERO | DESCRIPCION |
|---|---|
| | |

SIMBOLOGIA

NOTAS:

1.- Las Dimensiones son Referenciales y Serán Definidas por Cálculo Estructural

EMISIONES

| EMI | FECHA | DESCRIPCION | PROY | REV | APR | APR |
|---|---|---|---|---|---|---|
| C | 17/12/07 | Aprobacion y Comentarios | DG/JC | JC | EW | AL/RB |
| B | 12/12/07 | Para Informacion | DG/JC | JC | EW | AL/RB |
| A | 05/12/07 | Para Informacion | DG/JC | JC | EW | AL/RB |

REVISIONES

| REV | FECHA | DESCRIPCION | PROY | REV | APR | APR |
|---|---|---|---|---|---|---|
| C | 17/12/07 | Revision General | DG/JC | JC | EW | AL/RB |
| B | 12/12/07 | Revision General | DG/JC | JC | EW | AL/RB |
| A | 05/12/07 | Diseño Conceptual | DG/JC | JC | EW | AL/RB |

Gener una empresa AES

PROYECTO
HIDROELECTRICO ALTO MAIPO
INGENIERIA BASICA

cade-idepe · POCH Ingeniería · Norconsult

AREA 020 — ESTUDIOS BASICOS DISEÑO CONCEPTUAL

TITULO
PUENTE EL YESO
ACCESO VA4 ENCAÑADO
VISTA GENERAL Y TABLERO

| ESCALA | | NOMBRE | FIRMA | FECHA |
|---|---|---|---|---|
| Indicadas | PROY. | DG | | 05-12-07 |
| | REV. | JC | | 05-12-07 |
| | APR. | EW | | 05-12-07 |
| | APR. | RB/AL | | 05-12-07 |

No PLANOS GCAM: 020-CA-PLA-026 — REV. C

EMISION N° · EMISION · FECHA EMISION · $DATE$ · HORA · $TIME$

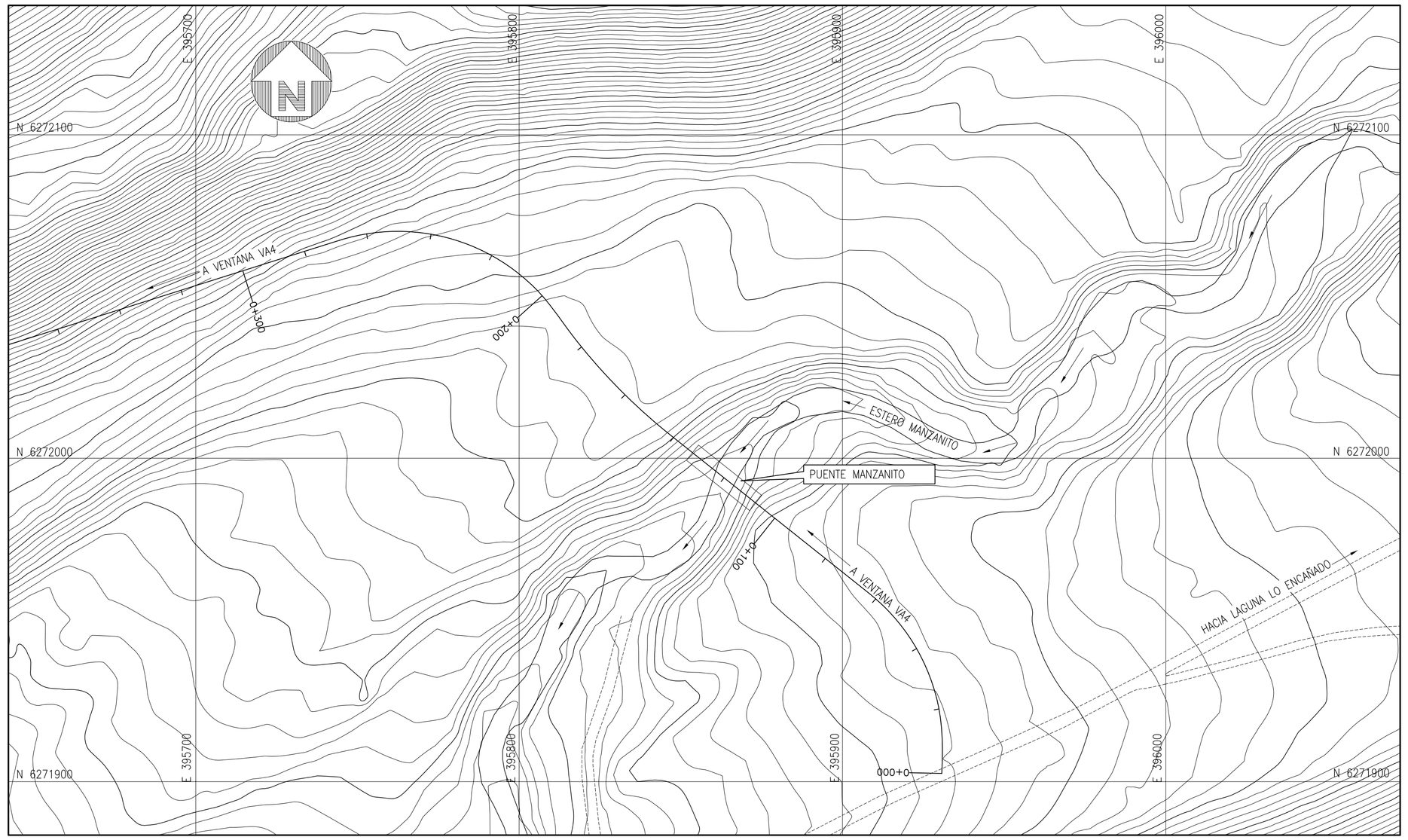


## PLANTA PUENTE

ESC. 1:1000

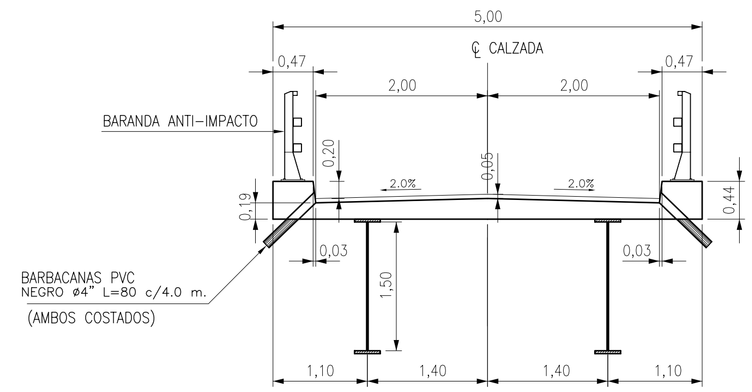


## SECCION TRANSVERSAL DEL TABLERO

ESC. 1:50

## VISTA GENERAL PUENTE (L=25)

ESC. 1:200

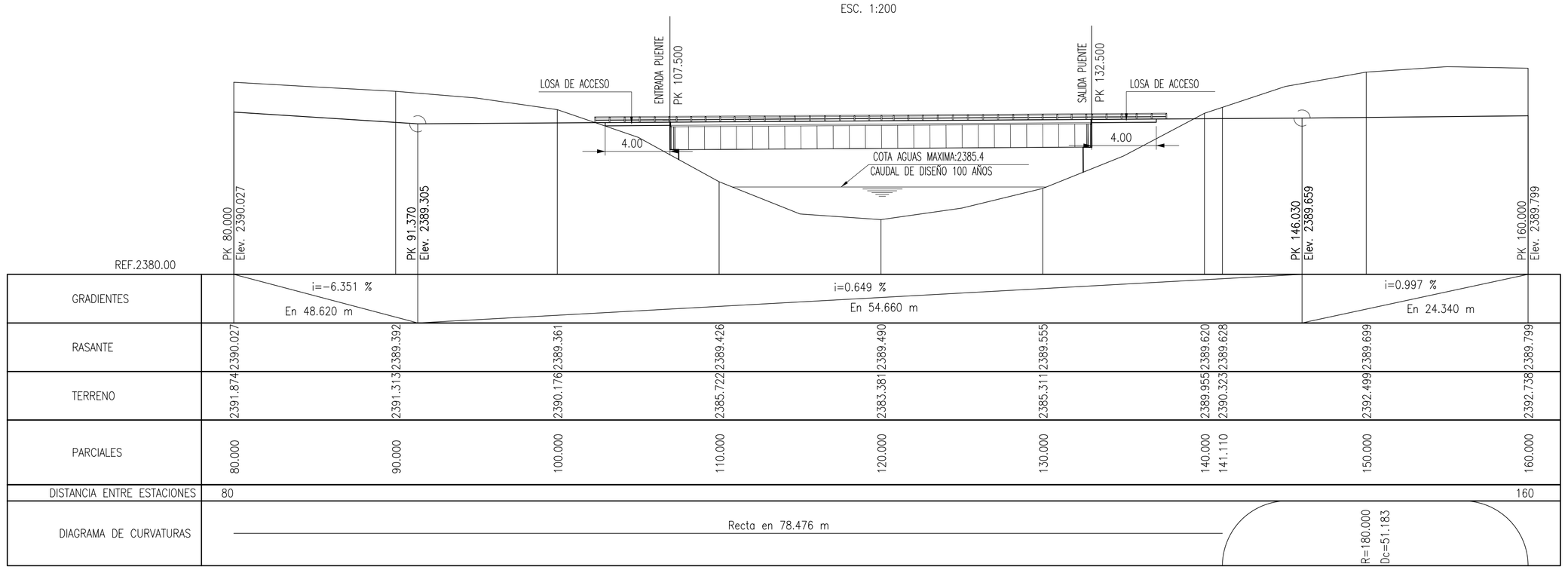


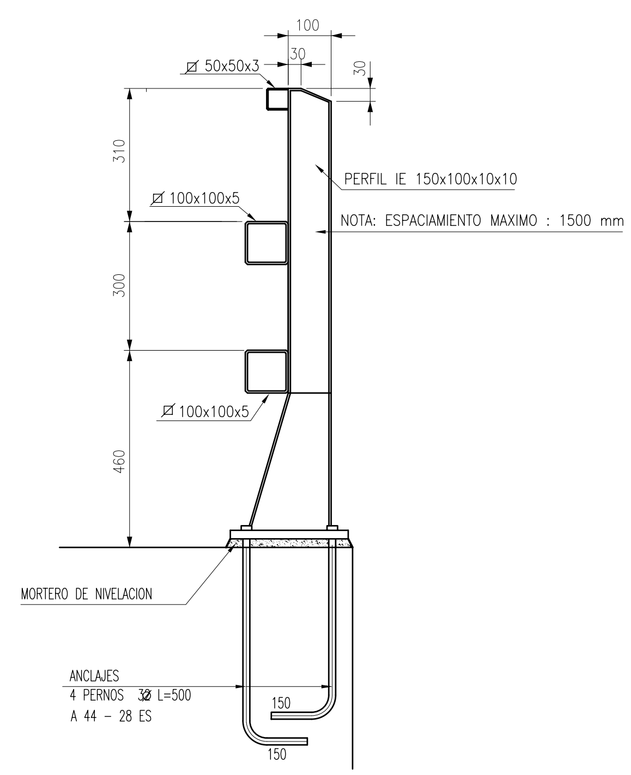


## DETALLE BARANDA ANTIMPACTO (GALVANIZADA EN CALIENTE)

ESC. 1:10 UNIDADES EN mm.(SIC)

### REFERENCIAS / ESTANDARES

| NUMERO | DESCRIPCION |
|---|---|
| | |

### SIMBOLOGIA

NOTAS:

1.- Las Dimensiones son Referenciales y Serán Definidas por Cálculo Estructural

### EMISIONES

| EMI | FECHA | DESCRIPCION | PROY | REV | APR | APR |
|---|---|---|---|---|---|---|
| C | 08-05-08 | Para Informacion | DG/JC | JC | EW | AL/RE |
| B | 12/12/07 | Aprobacion y Comentarios | DG/JC | JC | EW | AL/RE |
| A | 05/12/07 | Para Informacion | DG/JC | JC | EW | AL/RE |

### REVISIONES

| REV | FECHA | DESCRIPCION | PROY | REV | APR | APR |
|---|---|---|---|---|---|---|
| C | 08/05/08 | Revision General | DG/JC | JC | EW | AL/RE |
| B | 17/12/07 | Revision General | DG/JC | JC | EW | AL/RE |
| A | 05/12/07 | Diseño Conceptual | DG/JC | JC | EW | AL/RE |

Gener
una empresa AES

PROYECTO
HIDROELECTRICO ALTO MAIPO
INGENIERIA BASICA

cade-idepe
Norconsult
POCH Ingeniería

AREA 020
ESTUDIOS BASICOS
DISEÑO CONCEPTUAL

TITULO
PUENTE MANZANITO
ACCESO VA4 ENCAÑADO
VISTA GENERAL Y TABLERO

| ESCALA | | NOMBRE | FIRMA | FECHA |
|---|---|---|---|---|
| Indicadas | PROY. | DG | | 05-12-07 |
| | REV. | JC | | 05-12-07 |
| | APR. | EW | | 05-12-07 |
| | APR. | RB/AL | | 05-12-07 |

No PLANOS GCAM: 020-CA-PLA-027

REV. C

$DATE$ FECHA EMISION EMISION Nº
$TIME$ HORA

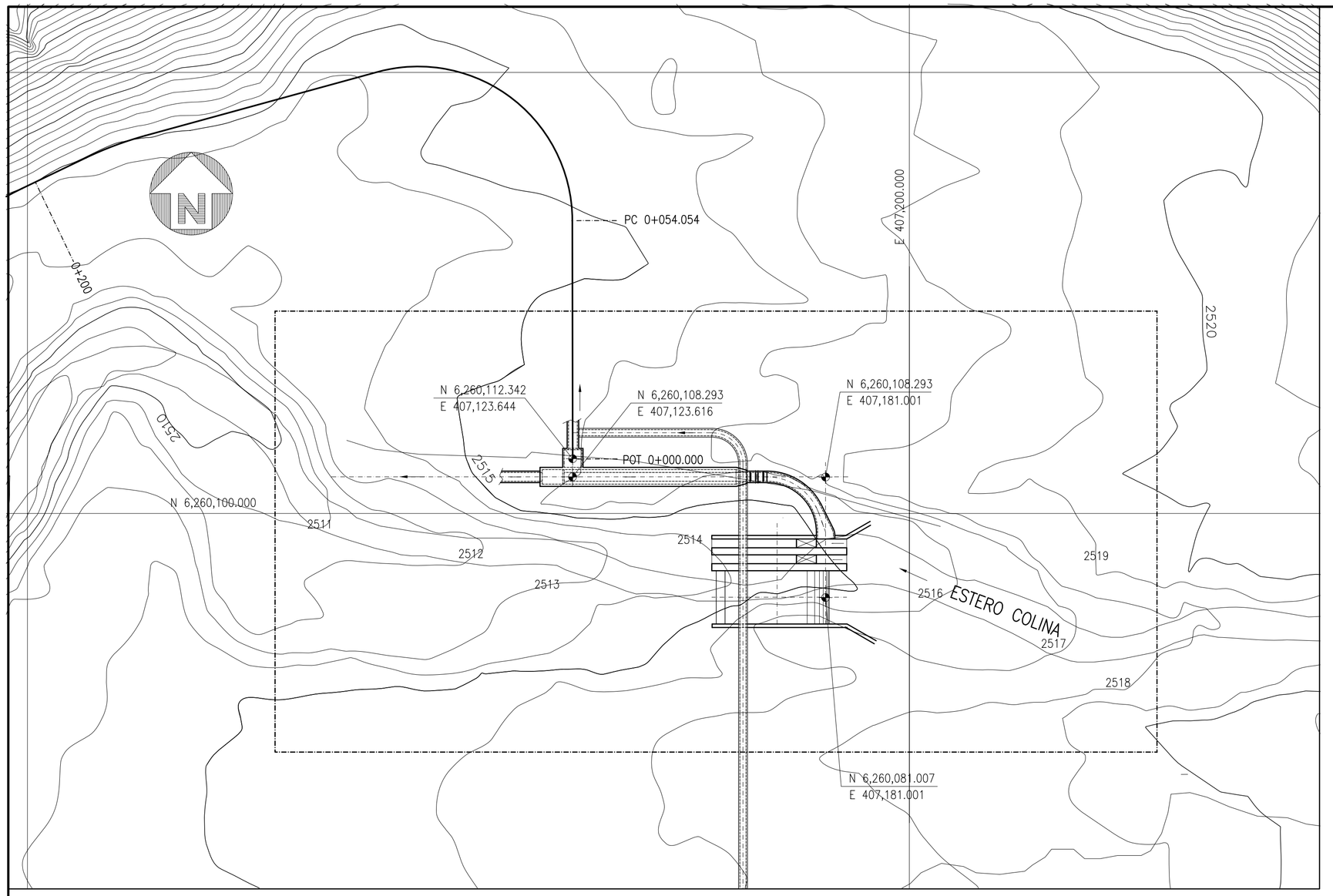


PLANTA
ESC.1:750

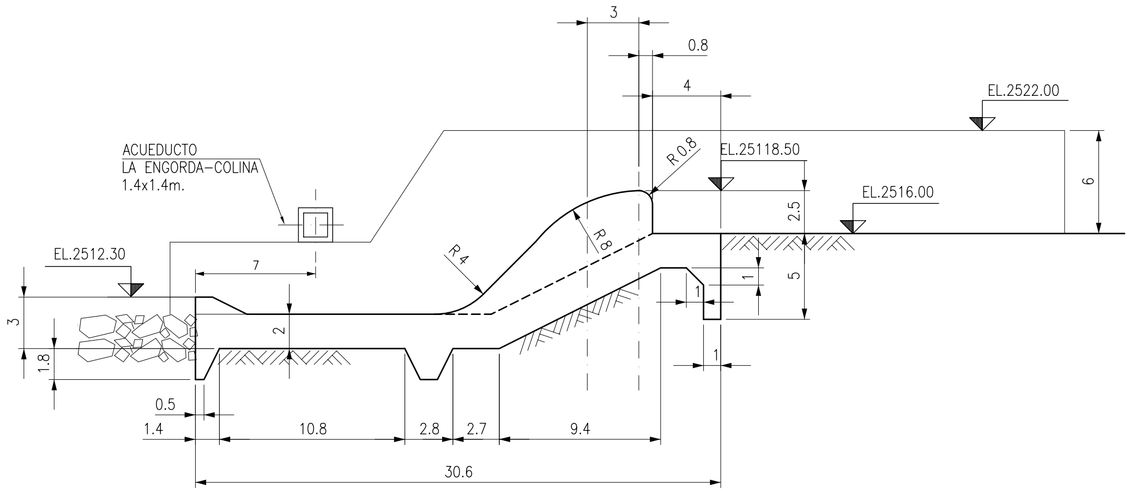


SECCION B
ESC.1:250

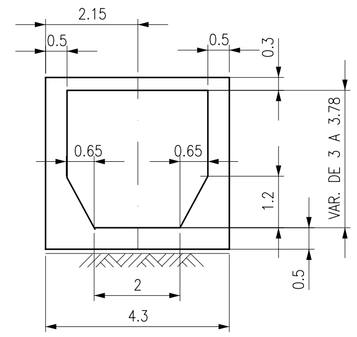


SECCION D
ESC.1:100

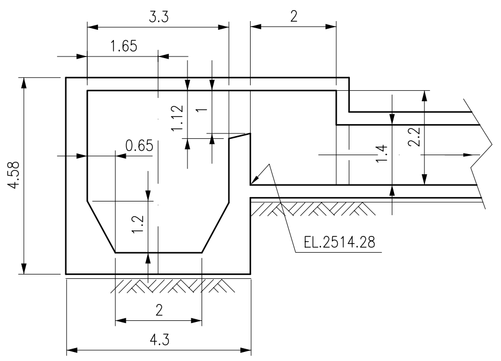


SECCION E
ESC.1:100

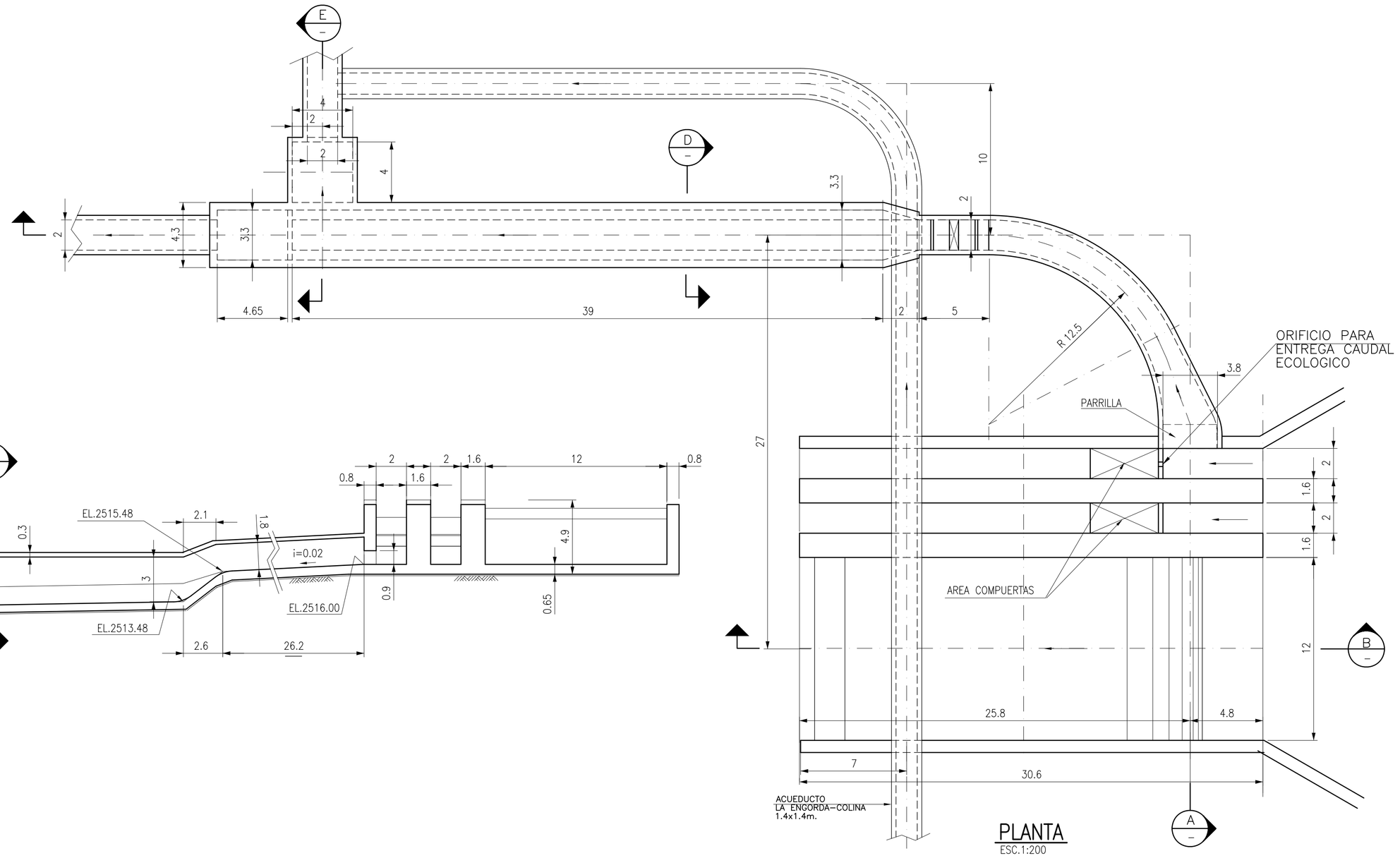


PLANTA
ESC.1:200

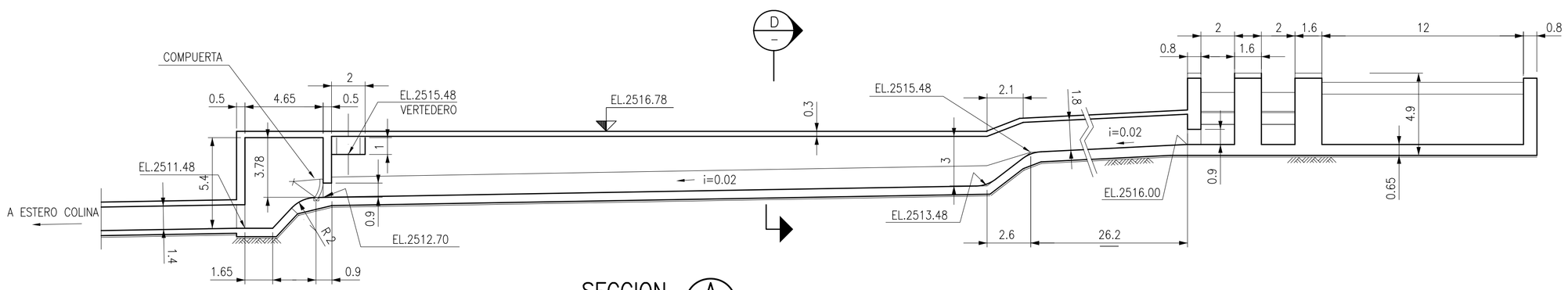


SECCION A
ESC.1:200

## REFERENCIAS / ESTANDARES

| NUMERO | DESCRIPCION |
|---|---|
| 020-CI-PLA-005 | DISPOSICION GENERAL |

## SIMBOLOGIA

## EMISIONES

| EMI | FECHA | DESCRIPCION | PROY | REV | APR | APR |
|---|---|---|---|---|---|---|
| D | 12/05/08 | PARA INFORMACION | PQ | FD | EW | AL/RB |
| C | 14/12/07 | APROBACION Y COMENTARIOS | CC/FD | HJ | EW | AL/RB |
| B | 05/12/07 | INFORMACION | CC/FD | HJ | EW | AL/RB |
| A | 27/11/07 | PARA INFORMACION | CC/FD | HJ | EW | AL/RB |

## REVISIONES

| REV | FECHA | DESCRIPCION | PROY | REV | APR | APR |
|---|---|---|---|---|---|---|
| D | 12/05/08 | REVISION GENERAL | PQ | FD | EW | AL/RB |
| C | 14/12/07 | REVISION GENERAL | CC/FD | HJ | EW | AL/RB |
| B | 05/12/07 | DISEÑO CONCEPTUAL | CC/FD | HJ | EW | AL/RB |
| A | 27/11/07 | REVISION GENERAL | CC/FD | HJ | EW | AL/RB |

Gener
una empresa AES

PROYECTO
HIDROELECTRICO ALTO MAIPO
INGENIERIA BASICA

cade-idepe
Norconsult
POCH Ingeniería

AREA 020
ESTUDIOS BASICOS
DISEÑO CONCEPTUAL

TITULO
OBRAS SUPERFICIALES EL VOLCAN
CAPTACION ESTERO COLINA
BOCATOMA,REJA Y VERTEDERO

ESCALA: Indicadas

| | NOMBRE | FIRMA | FECHA |
|---|---|---|---|
| PROY. | CC/FD | | 26-08-07 |
| REV. | HJ | | 25-09-07 |
| APR. | EW | | 25-09-07 |
| APR. | AL/RB | | 25-09-07 |

No PLANOS GCAM: 020-HI-PLA-002

REV. D

EMISION N° | FECHA EMISION | $DATE$ | HORA | $TIME$

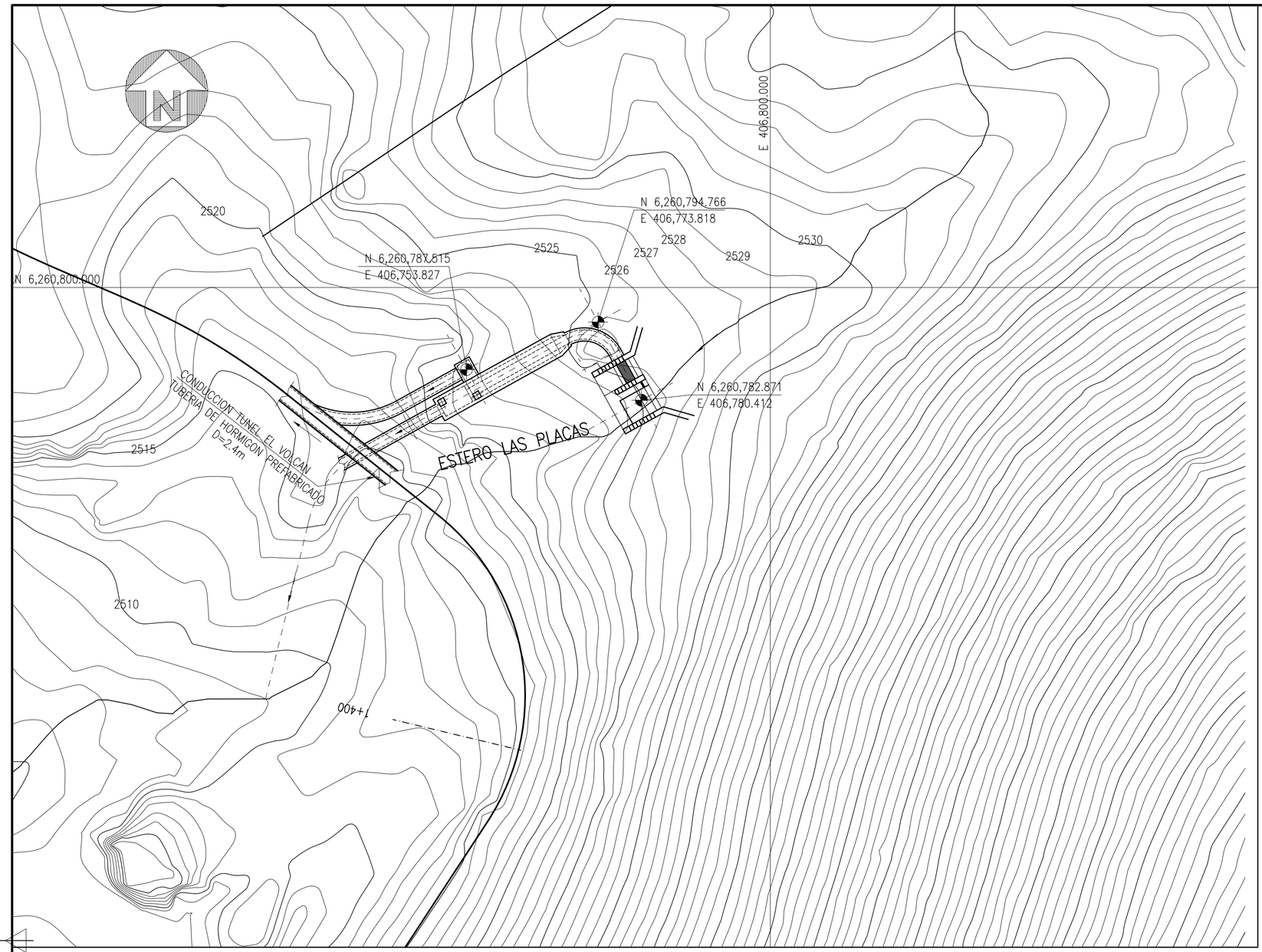


PLANTA
ESC.1:500

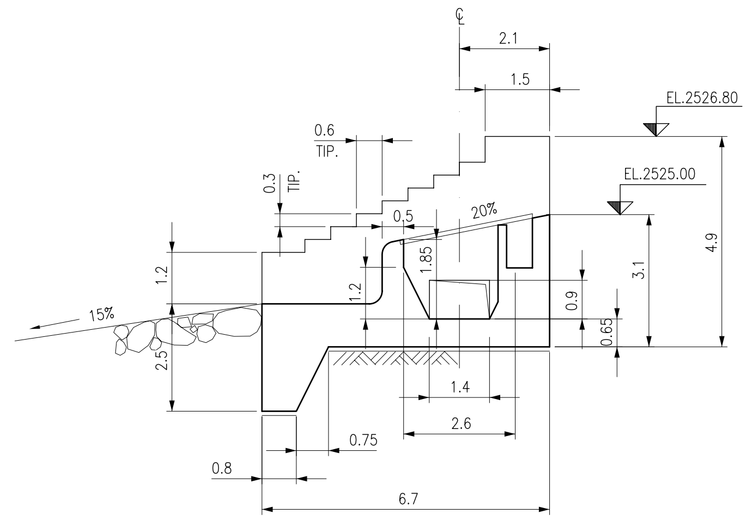


SECCION B
ESC.1:100

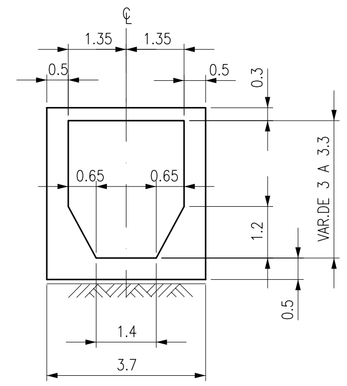


SECCION C
ESC.1:100

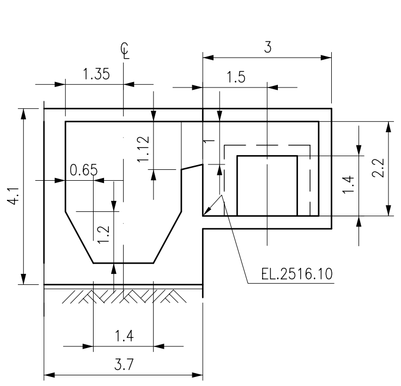


SECCION D
ESC.1:100

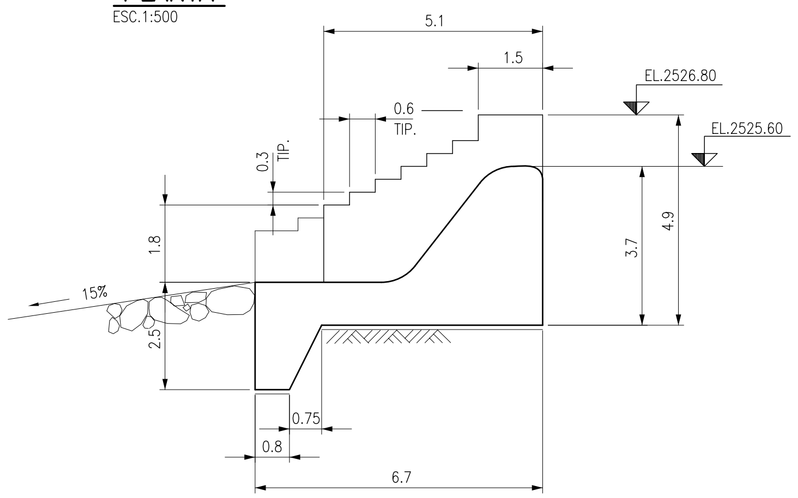


SECCION E
ESC.1:100

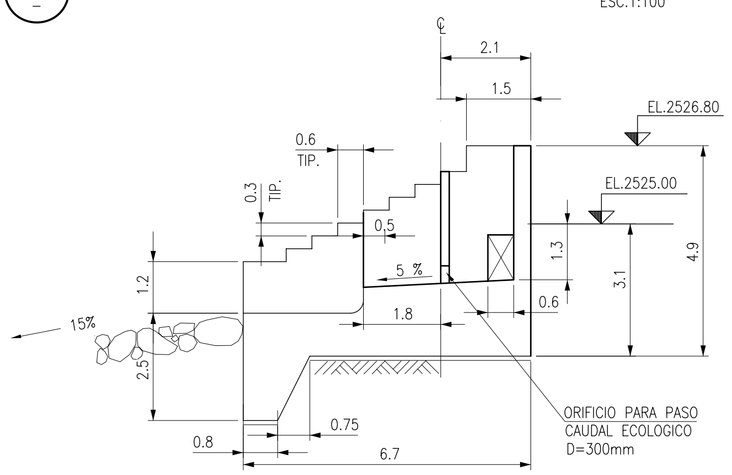


SECCION F
ESC.1:100

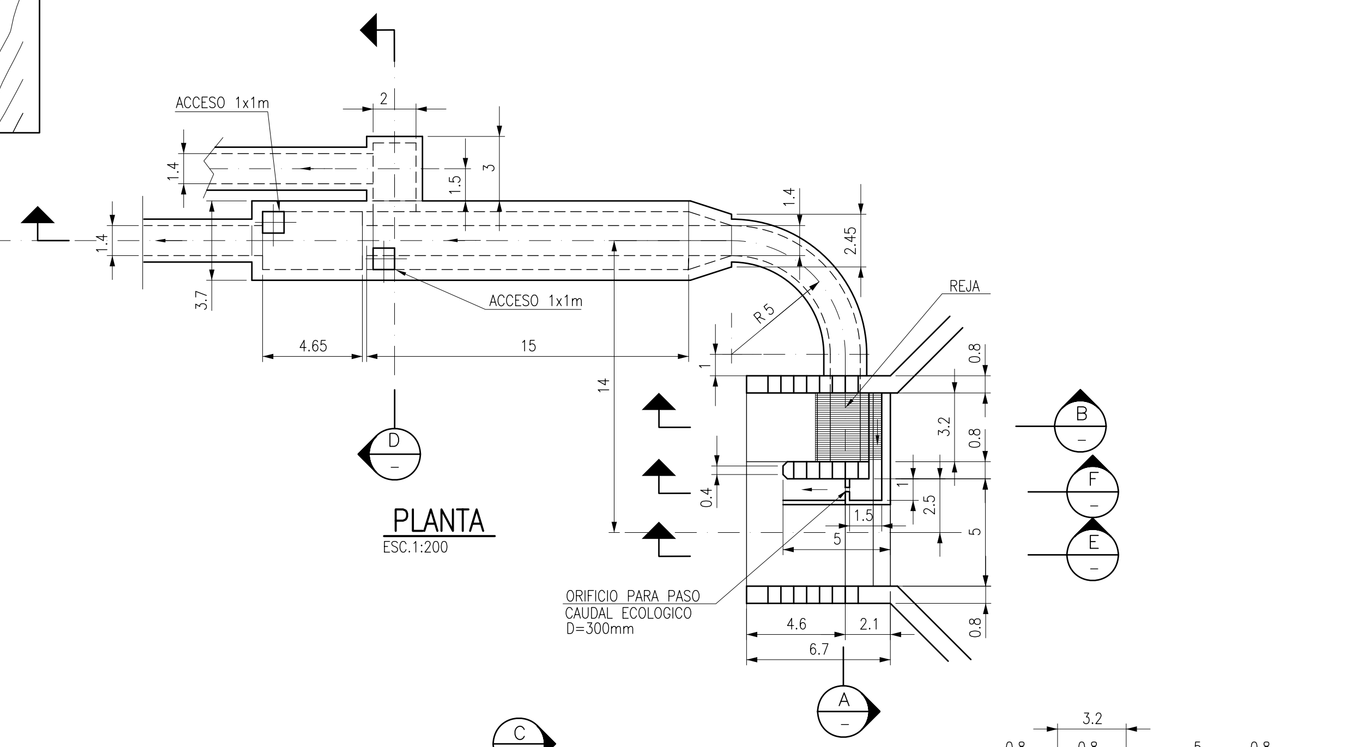


PLANTA
ESC.1:200

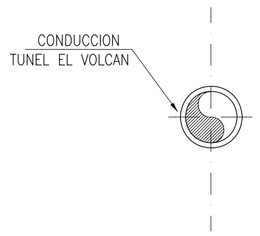


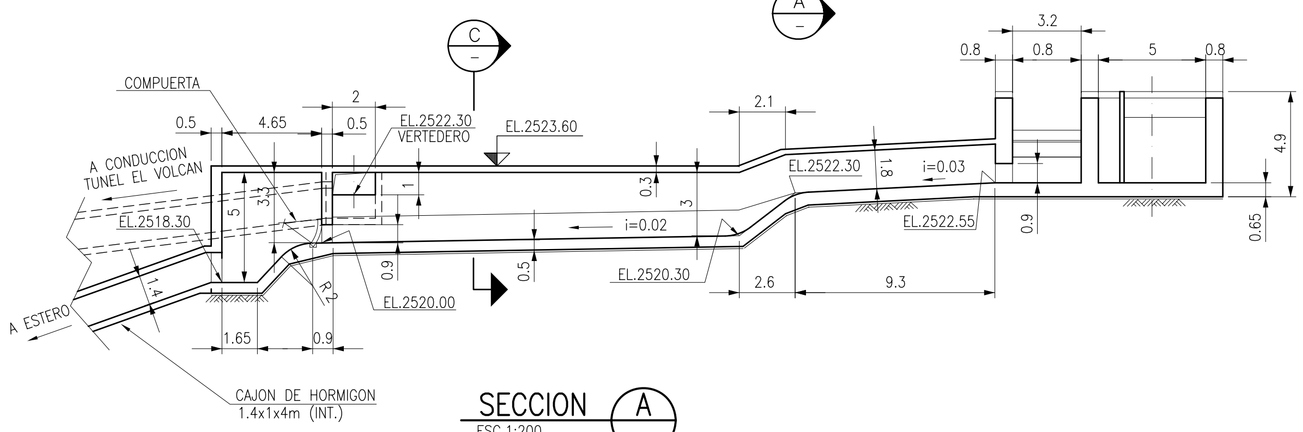


SECCION A
ESC.1:200

## REFERENCIAS / ESTANDARES

| NUMERO | DESCRIPCION |
|---|---|
| 020-CI-PLA-005 | DISPOSICION GENERAL |

## SIMBOLOGIA

## EMISIONES

| EMI | FECHA | DESCRIPCION | PROY | REV | APR | APR |
|---|---|---|---|---|---|---|
| D | 09/05/08 | INFORMACION GENERAL | PQ | FD | EW | AL/RB |
| C | 02/01/08 | APROBACION Y COMENTARIOS | CC/FD | HJ | EW | AL/RB |
| B | 05/12/07 | INFORMACION | CC/FD | HJ | EW | AL/RB |
| A | 27/11/07 | PARA INFORMACION | CC/FD | HJ | EW | AL/RB |

## REVISIONES

| REV | FECHA | DESCRIPCION | PROY | REV | APR | APR |
|---|---|---|---|---|---|---|
| D | 09/05/08 | REVISION GENERAL | PQ | FD | EW | AL/RB |
| C | 02/01/08 | MODIFICA DISEÑO GENERAL | CC/FD | HJ | EW | AL/RB |
| B | 05/12/07 | DISEÑO CONCEPTUAL | CC/FD | HJ | EW | AL/RB |
| A | 27/11/07 | REVISION GENERAL | CC/FD | HJ | EW | AL/RB |

Gener
una empresa AES

PROYECTO
HIDROELECTRICO ALTO MAIPO
INGENIERIA BASICA

cade-idepe
Norconsult
POCH Ingeniería

AREA 020
ESTUDIOS BASICOS
DISEÑO CONCEPTUAL

TITULO
OBRAS SUPERFICIALES EL VOLCAN
CAPTACION ESTERO LAS PLACAS
BOCATOMA, REJA Y VERTEDERO

| ESCALA | | NOMBRE | FIRMA | FECHA |
|---|---|---|---|---|
| Indicadas | PROY. | CC/FD | | 27-09-07 |
| | REV. | HJ | | 27-09-07 |
| | APR. | EW | | 27-09-07 |
| | APR. | AL/RB | | 27-09-07 |

No PLANOS GCAM: 020-HI-PLA-003
REV. D

EMISION N° | EMISION | FECHA | $DATE$ | HORA | $TIME$

## PLANTA PUENTE

ESC. 1:1000

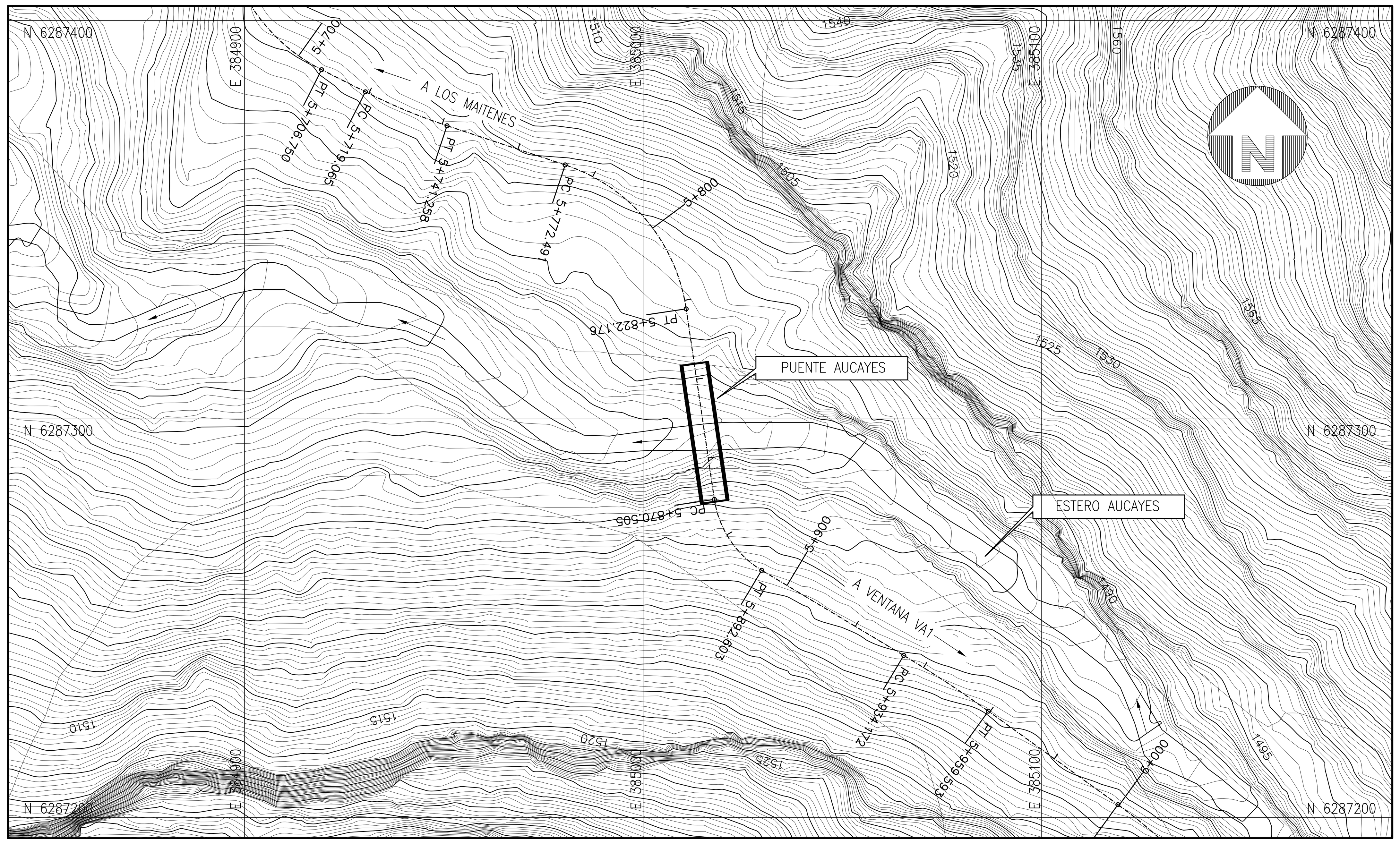


## SECCION TRANSVERSAL DEL TABLERO

ESC. 1:50

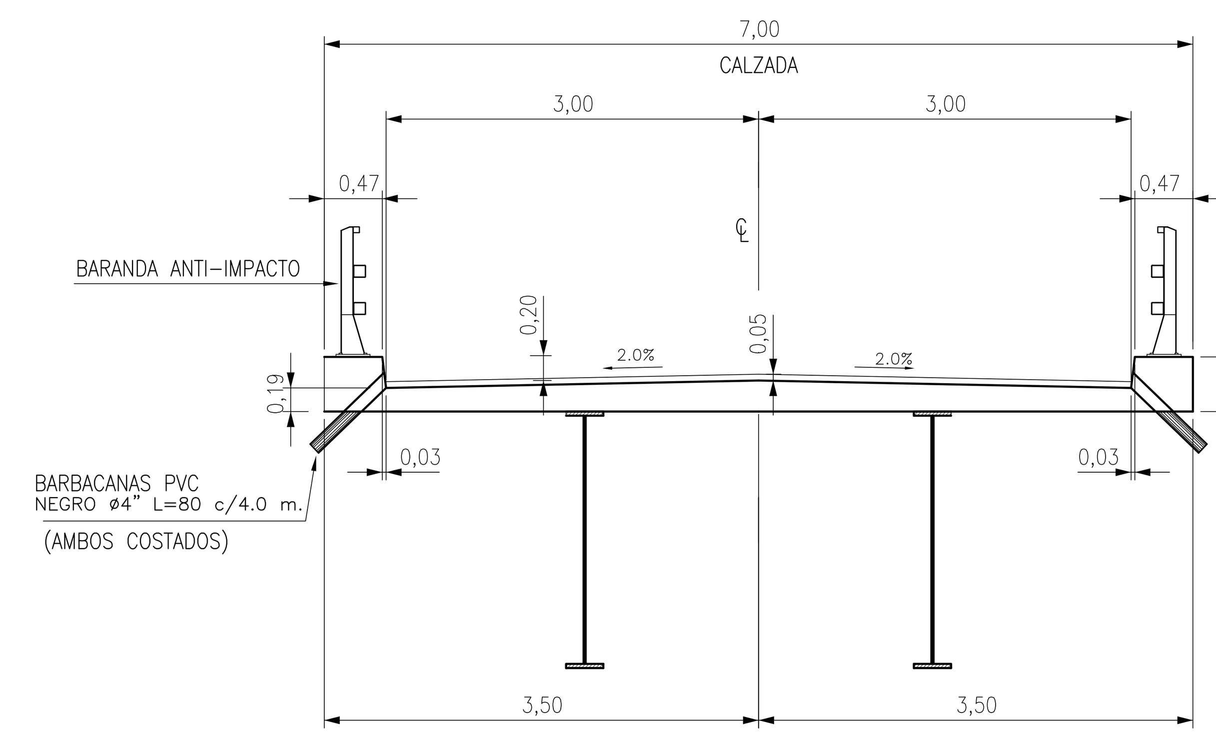


## DETALLE BARANDA ANTIMPACTO (GALVANIZADA EN CALIENTE)

ESC. 1:10 UNIDADES EN mm.(SIC)

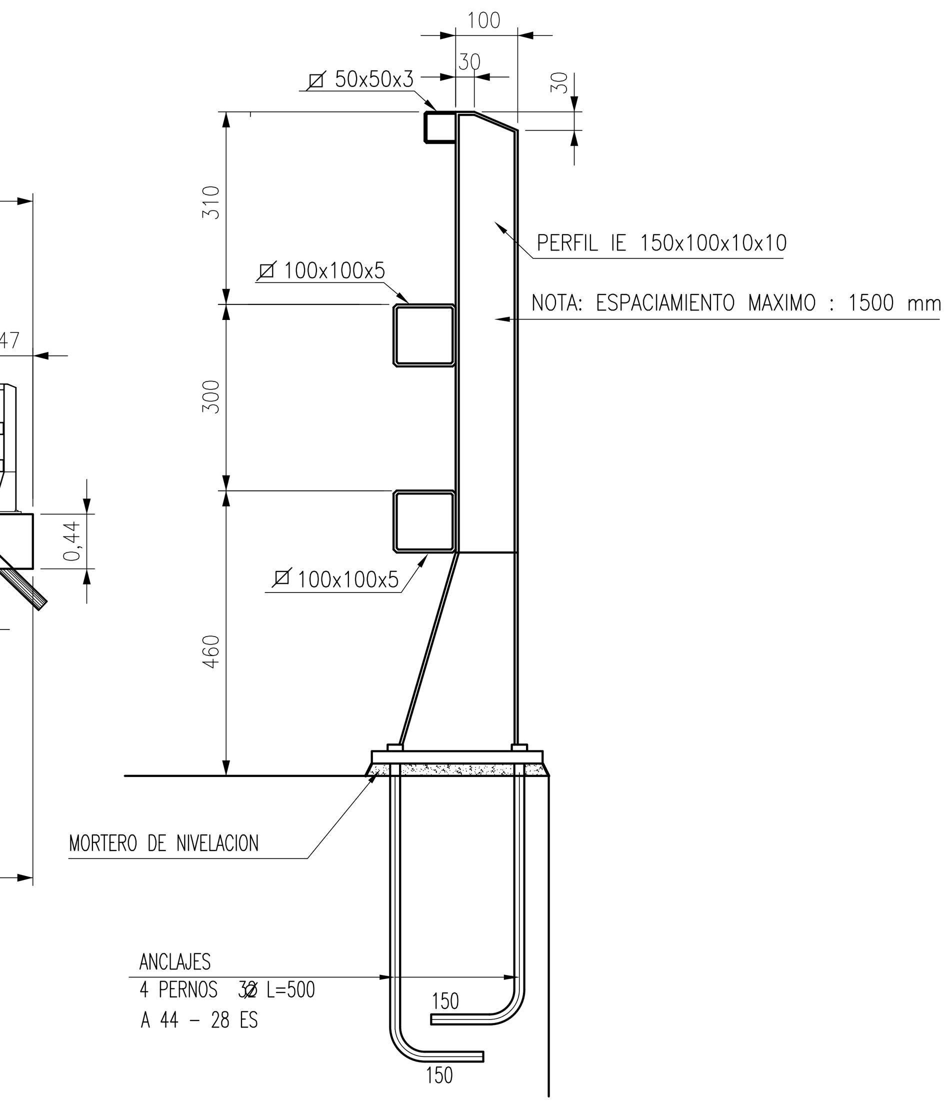


## VISTA GENERAL PUENTE (L=35m)

ESC. 1:200

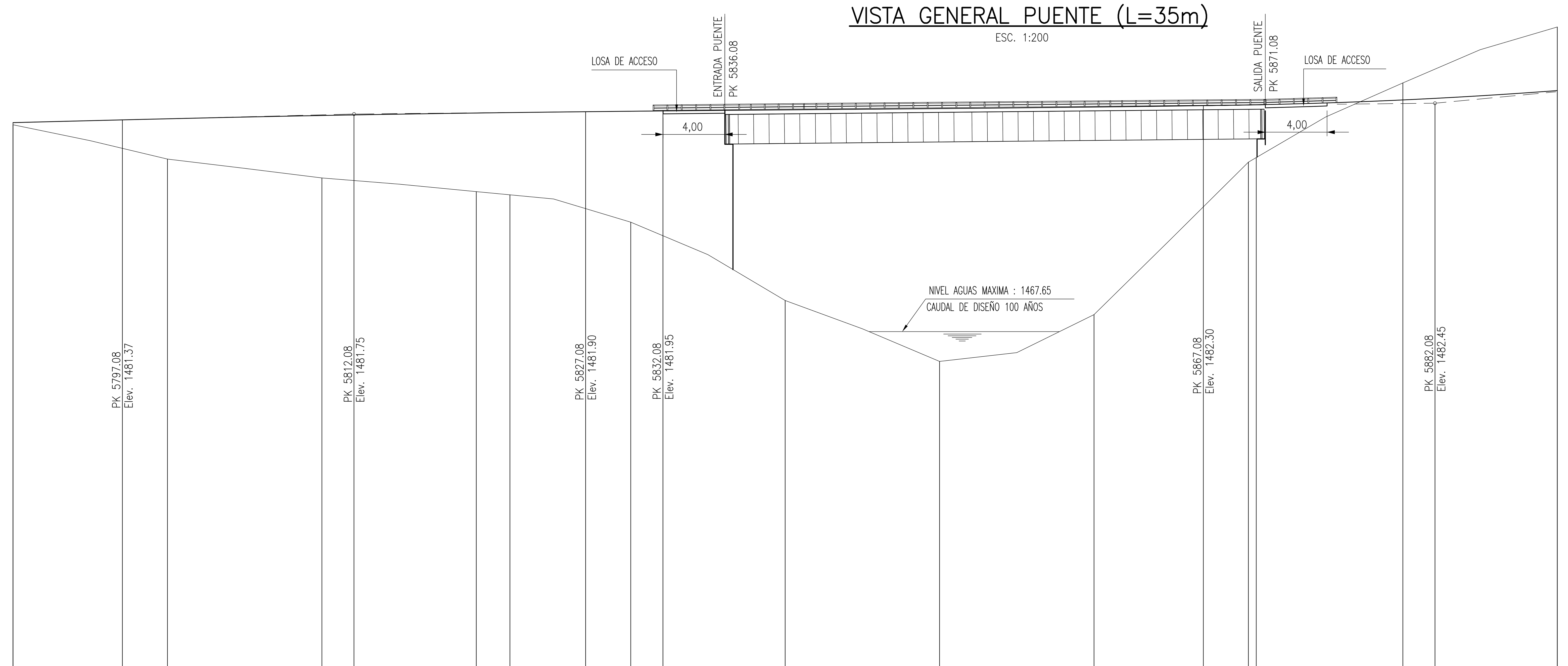


REF.1445.00

GRADIENTES: i=2.527 % En 55.830 m; 2T= 30.0 m K= −1964.2; i=1.000 % En 40.000 m; 2T= 30.0 m K= 355.3

| PARCIALES | TERRENO | RASANTE |
|---|---|---|
| 5790.000 | 1481.053 | 1481.192 |
| 5800.000 | 1478.833 | 1481.443 |
| 5810.000 | 1477.610 | 1481.655 |
| 5820.000 | 1476.721 | 1481.816 |
| 5822.176 | 1476.514 | 1481.845 |
| 5830.000 | 1474.743 | 1481.929 |
| 5840.000 | 1469.666 | 1482.029 |
| 5850.000 | 1465.720 | 1482.129 |
| 5860.000 | 1468.751 | 1482.229 |
| 5870.000 | 1478.632 | 1482.341 |
| 5870.505 | 1478.927 | 1482.351 |
| 5880.000 | 1483.767 | 1482.664 |
| 5890.000 | 1487.389 | 1483.268 |

DISTANCIA ENTRE ESTACIONES: 5+790 … 5+890

DIAGRAMA DE CURVATURAS: R=45.000 Dc=49.685; Recta en 48.329 m; R=25.000 Dc=22.098

### REFERENCIAS / ESTANDARES

| NUMERO | DESCRIPCION |
|---|---|

### SIMBOLOGIA

NOTAS:

1.- Las Dimensiones son Referenciales y Serán Definidas por Cálculo Estructural

### EMISIONES

| EMI | FECHA | DESCRIPCION | PROY | REV | APR | APR |
|---|---|---|---|---|---|---|
| D | 08-05-08 | Para Información | DG | JC | JC | AL/RB |
| C | 17-12-07 | Aprobacion y Comentarios | DG | JC | EW | AL/RB |
| B | 12-12-07 | Para Información | DG | JC | EW | AL/RB |
| A | 05-12-07 | Para Información | DG | JC | EW | AL/RB |

### REVISIONES

| REV | FECHA | DESCRIPCION | PROY | REV | APR | APR |
|---|---|---|---|---|---|---|
| D | 08-05-08 | Revision General | DG/JC | JC | EW | AL/RB |
| C | 17-12-07 | Revision General | DG/JC | JC | EW | AL/RB |
| B | 12-12-07 | Revision General | DG/JC | JC | EW | AL/RB |
| A | 05-12-07 | Diseño Conceptual | DG/JC | JC | EW | AL/RB |

Gener una empresa AES

PROYECTO
HIDROELECTRICO ALTO MAIPO
INGENIERIA BASICA

cade-idepe POCH Norconsult Ingeniería

AREA 020 ESTUDIOS BASICOS DISEÑO CONCEPTUAL

TITULO
PUENTE AUCAYES
ACCESO A VA1
VISTA GENERAL Y TABLERO

ESCALA: Indicadas

| | NOMBRE | FIRMA | FECHA |
|---|---|---|---|
| PROY. | DG | | 05-12-07 |
| REV. | JC | | 05-12-07 |
| APR. | EW | | 05-12-07 |
| APR. | RB/AL | | 05-12-07 |

No PLANOS GCAM: 020-CA-PLA-025 REV. D

| HORA | FECHA EMISION | EMISION N° |
|---|---|---|
| $TIME$ | $DATE$ | |

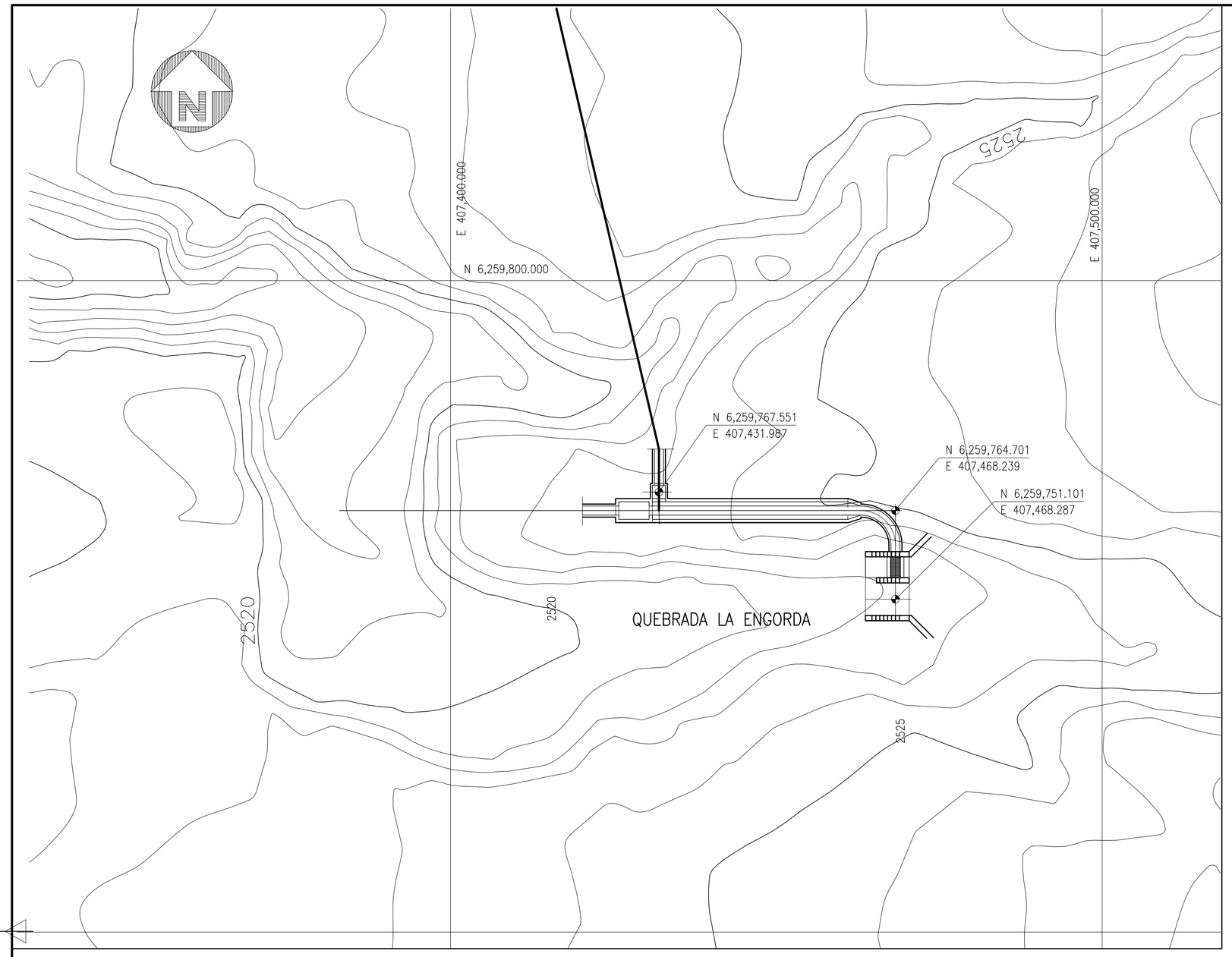


PLANTA
ESC.1:500

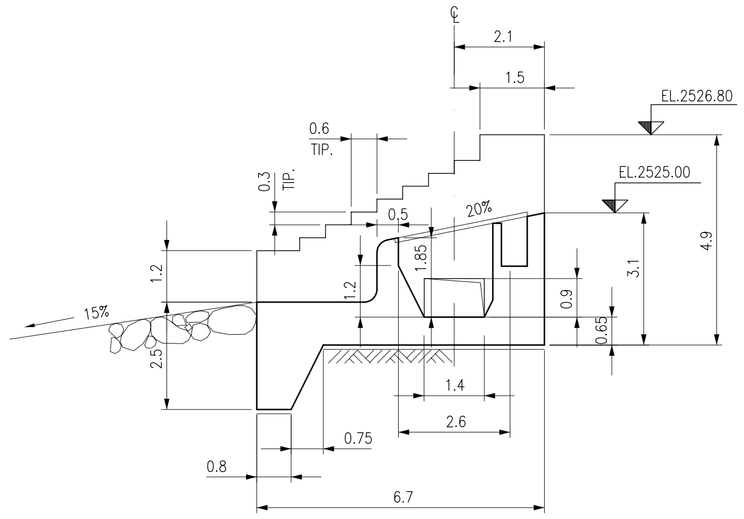


SECCION B
ESC.1:100

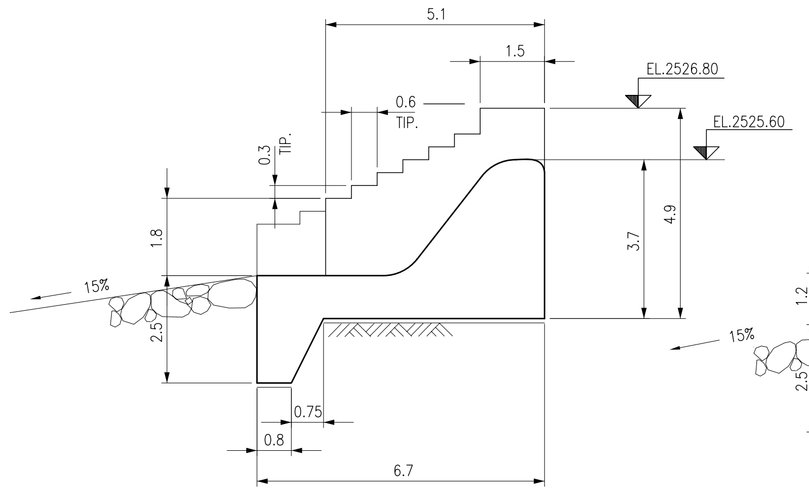


SECCION E
ESC.1:100

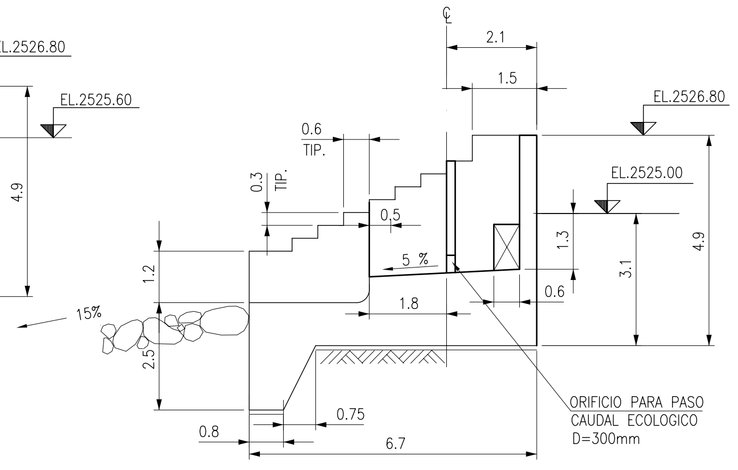


SECCION F
ESC.1:100

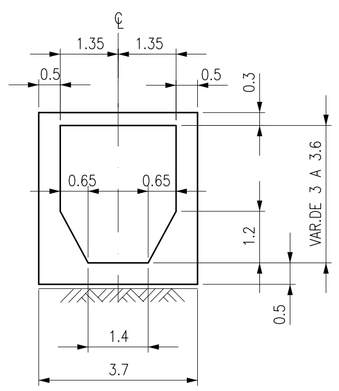


SECCION C
ESC.1:100

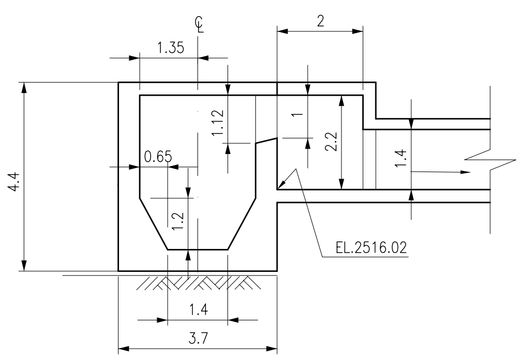


SECCION D
ESC.1:100

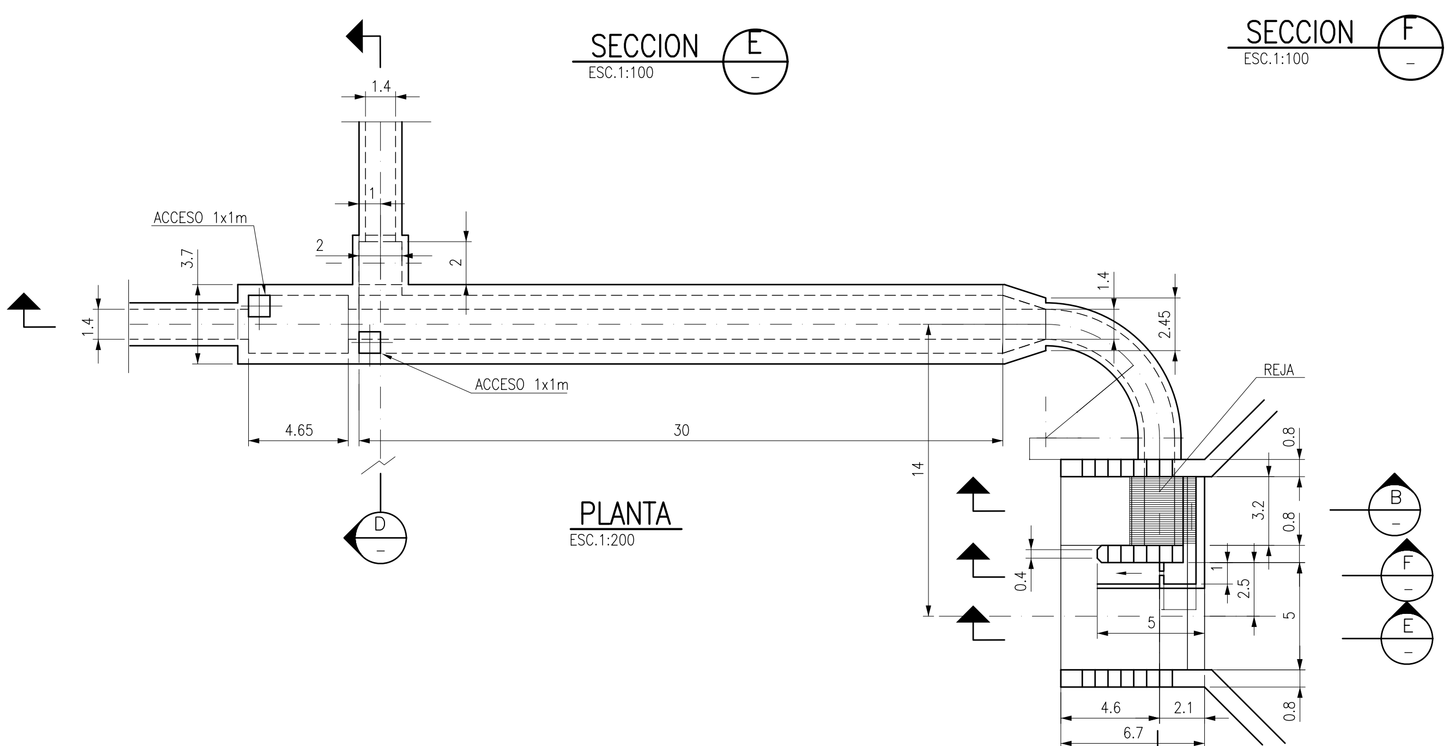


PLANTA
ESC.1:200

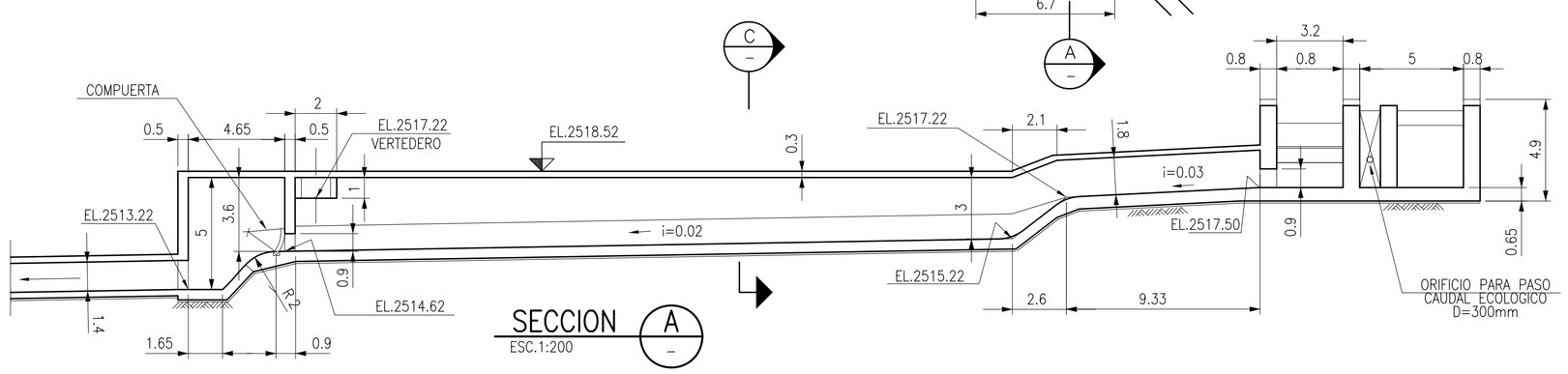


SECCION A
ESC.1:200

## REFERENCIAS / ESTANDARES

| NUMERO | DESCRIPCION |
|---|---|
| 020-CI-PLA-005 | DISPOSICION GENERAL |

## SIMBOLOGIA

## EMISIONES

| EMI | FECHA | DESCRIPCION | PROY | REV | APR | APR |
|---|---|---|---|---|---|---|
| E | 09/05/08 | PARA INFORMACION | PQ | FD | EW | AL/RB |
| D | 09/05/08 | PARA INFORMACION | PQ | FD | EW | AL/RB |
| C | 14/12/07 | APROBACION Y COMENTARIOS | CC/FD | HJ | EW | AL/RB |
| B | 05/12/07 | INFORMACION | CC/FD | HJ | EW | AL/RB |
| A | 27/11/07 | PARA INFORMACION | CC/FD | HJ | EW | AL/RB |

## REVISIONES

| REV | FECHA | DESCRIPCION | PROY | REV | APR | APR |
|---|---|---|---|---|---|---|
| D | 09/05/08 | REVISION GENERAL | CC/FD | HJ | EW | AL/RB |
| C | 14/12/07 | REVISION GENERAL | CC/FD | HJ | EW | AL/RB |
| B | 05/12/07 | DISEÑO CONCEPTUAL | CC/FD | HJ | EW | AL/RB |
| A | 27/11/07 | REVISION GENERAL | CC/FD | HJ | EW | AL/RB |

Gener
una empresa AES

PROYECTO
HIDROELECTRICO ALTO MAIPO
INGENIERIA BASICA

cade-idepe
POCH Ingeniería
Norconsult

AREA 020
ESTUDIOS BASICOS
DISEÑO CONCEPTUAL

TITULO
OBRAS SUPERFICIALES EL VOLCAN
CAPTACION QUEBRADA LA ENGORDA
BOCATOMA, REJA Y VERTEDERO

| ESCALA | | NOMBRE | FIRMA | FECHA |
|---|---|---|---|---|
| Indicadas | PROY. | CC/FD | | 24-09-07 |
| | REV. | HJ | | 24-09-07 |
| | APR. | EW | | 24-09-07 |
| | APR. | AL/RB | | 24-09-07 |

No PLANOS GCAM: 020-HI-PLA-001
REV. D

EMISION N° | FECHA EMISION | $DATE$ | HORA | $TIME$

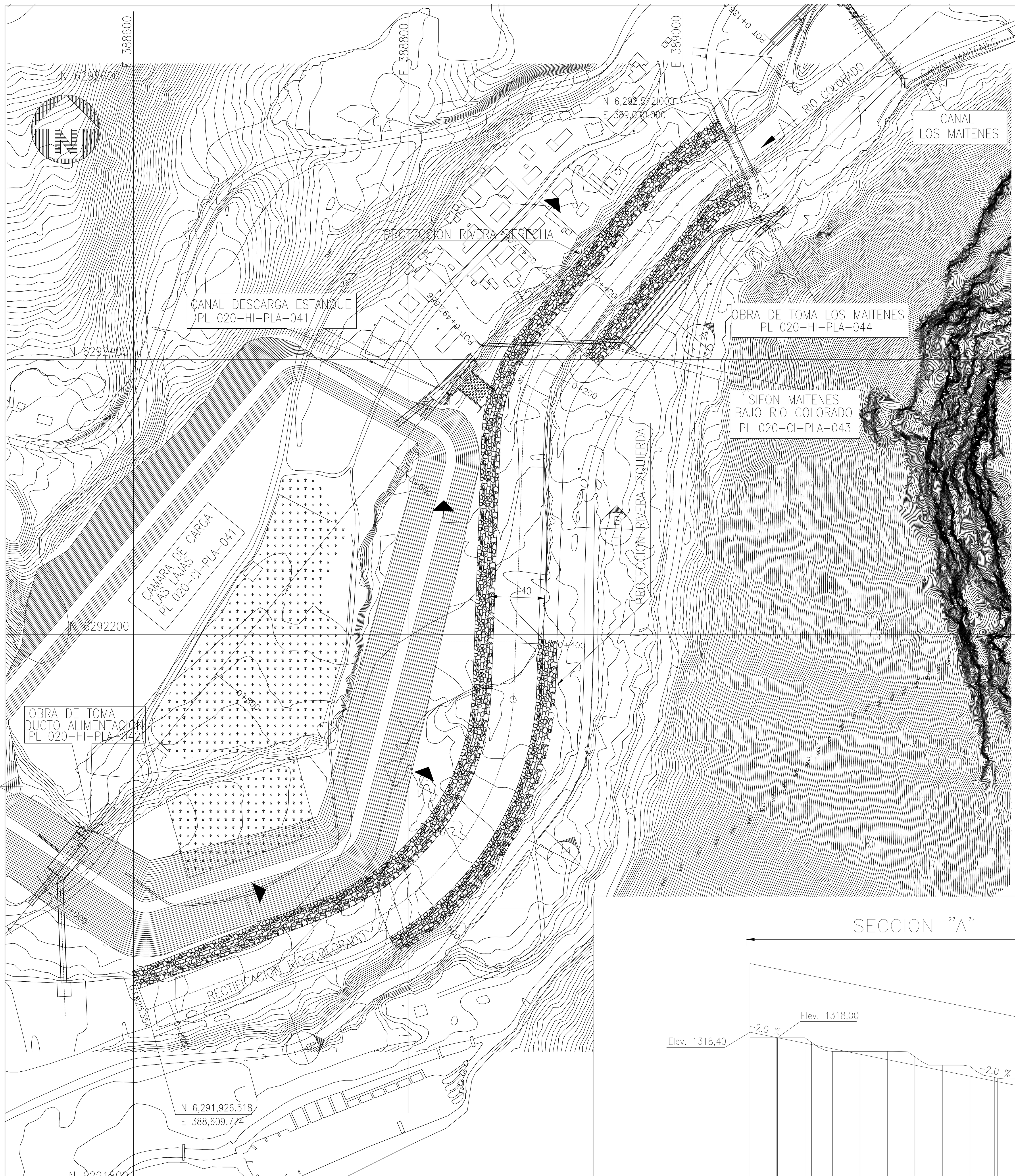


## PLANTA
ESC. 1:2000

ESCALA GRAFICA
1 : 2000

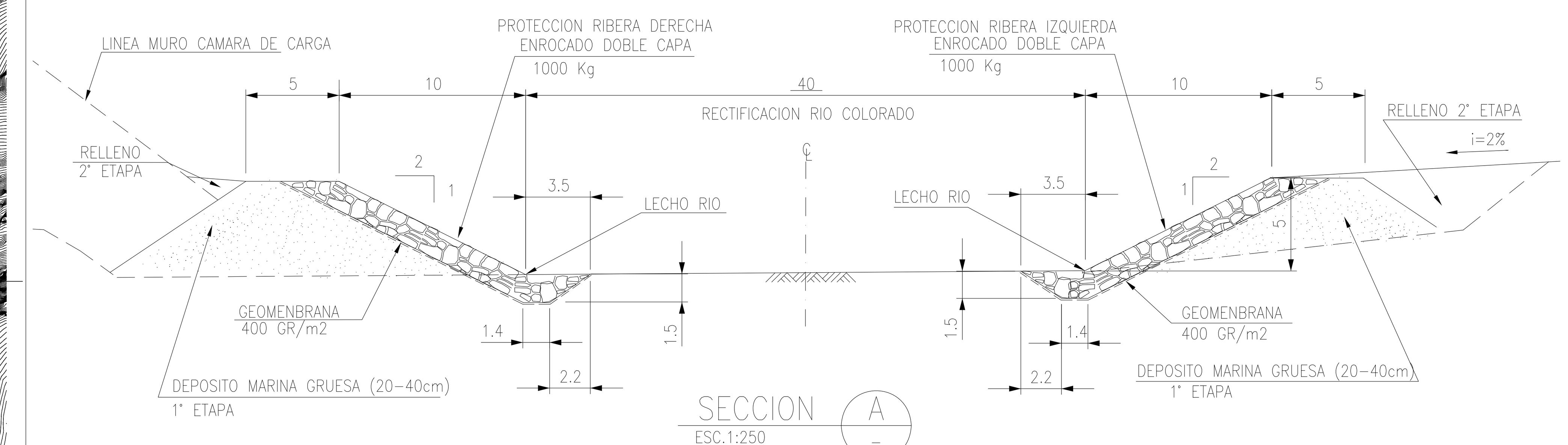


SECCION A
ESC.1:250

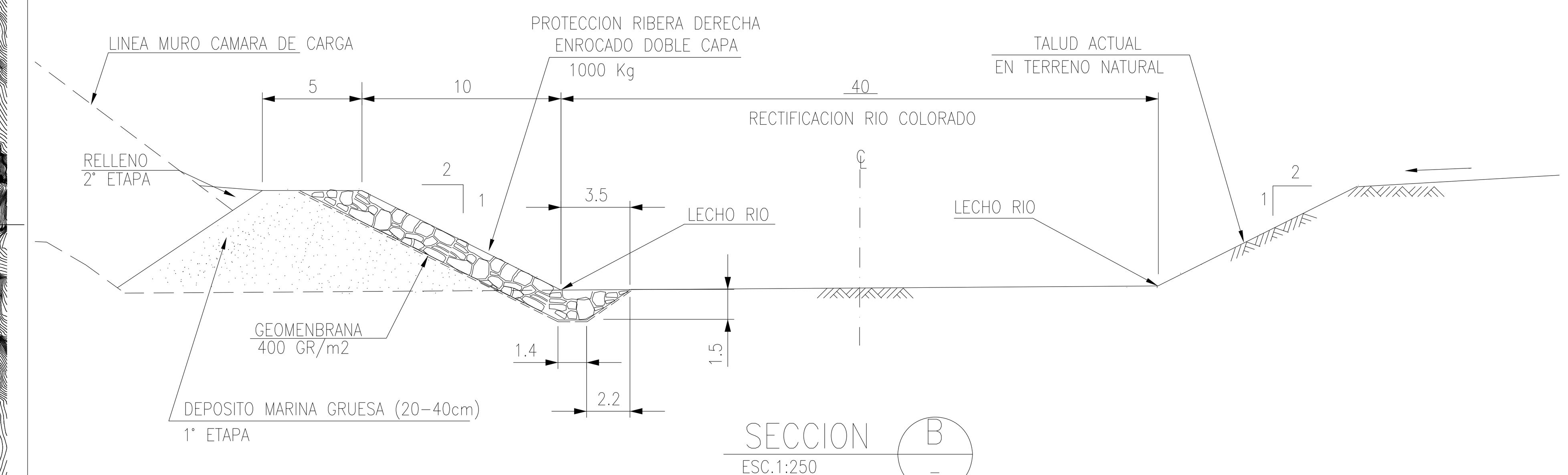


SECCION B
ESC.1:250

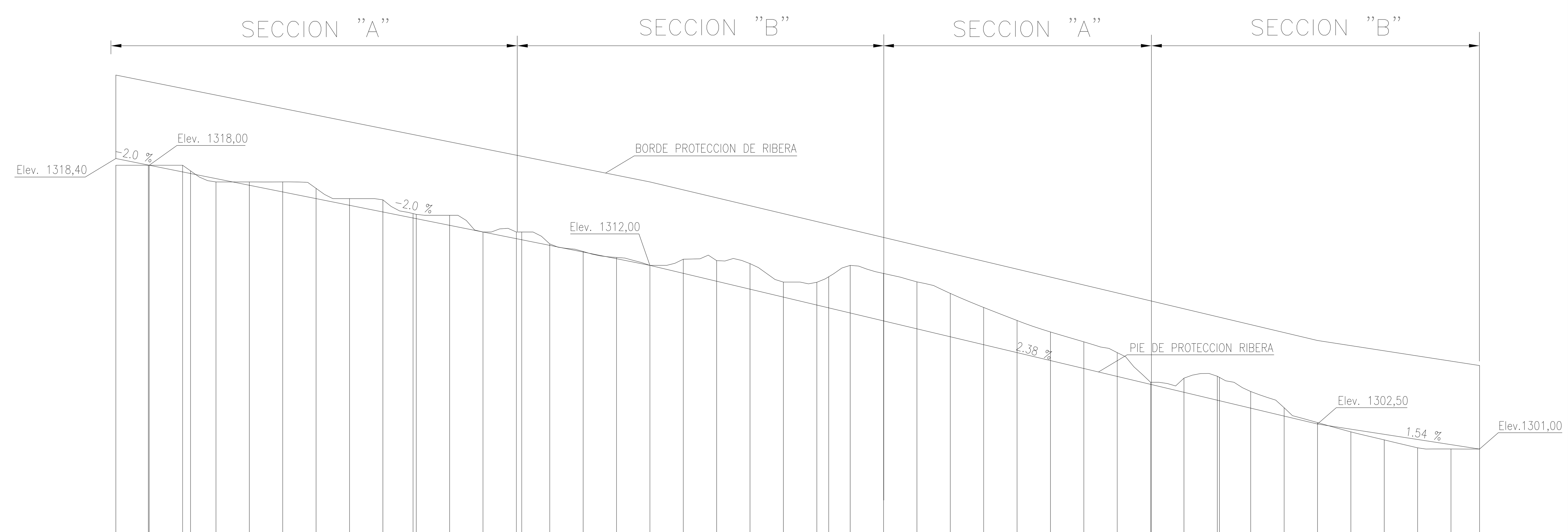


| DISTANCIAS PARCIALES | TERRENO |
|---|---|
| 0.000 | 1318.000 |
| 19.494 | 1318.000 |
| 20.000 | 1318.000 |
| 40.000 | 1318.000 |
| 44.775 | 1317.663 |
| 60.000 | 1317.000 |
| 80.000 | 1317.000 |
| 100.000 | 1317.000 |
| 120.000 | 1316.612 |
| 140.000 | 1316.000 |
| 160.000 | 1315.925 |
| 178.082 | 1315.103 |
| 180.000 | 1315.057 |
| 200.000 | 1315.000 |
| 220.000 | 1314.000 |
| 240.000 | 1314.000 |
| 243.189 | 1314.000 |
| 260.000 | 1313.289 |
| 280.000 | 1312.832 |
| 300.000 | 1312.476 |
| 320.000 | 1312.000 |
| 340.000 | 1312.368 |
| 360.000 | 1312.284 |
| 380.000 | 1312.107 |
| 400.000 | 1311.000 |
| 420.000 | 1310.987 |
| 427.142 | 1311.320 |
| 440.000 | 1312.000 |
| 460.000 | 1311.515 |
| 480.000 | 1311.014 |
| 500.000 | 1310.326 |
| 520.000 | 1309.483 |
| 540.000 | 1308.700 |
| 560.000 | 1308.013 |
| 580.000 | 1307.419 |
| 600.000 | 1306.773 |
| 620.000 | 1305.000 |
| 640.000 | 1305.244 |
| 660.000 | 1305.360 |
| 661.260 | 1305.292 |
| 680.000 | 1304.448 |
| 700.000 | 1303.475 |
| 720.000 | 1302.585 |
| 740.000 | 1302.024 |
| 760.000 | 1301.547 |
| 780.000 | 1301.071 |
| 800.000 | 1301.000 |
| 817.100 | 1301.000 |

## PERFIL LONGITUDINAL
ESC. HOR. 1:2000
VERT. 1:200

REFERENCIAS / ESTANDARES

| NUMERO | DESCRIPCION |
|---|---|

SIMBOLOGIA

EMISIONES

| EMI | FECHA | DESCRIPCION | PROY | REV | APR | APR |
|---|---|---|---|---|---|---|
| E | 15/12/07 | APROBACION Y COMENTARIOS | CC/JC | HJ | EW | AL/RB |
| D | 15/12/07 | INFORMACION | CC/JC | HJ | EW | AL/RB |
| C | 05/12/07 | INFORMACION | CC/JC | HJ | EW | AL/RB |
| B | 27/11/07 | PARA INFORMACION | CC/JC | HJ | EW | AL/RB |
| A | 10/10/07 | COORDINACION INTERNA | CC/JC | HJ | EW | AL/RB |

REVISIONES

| REV | FECHA | DESCRIPCION | PROY | REV | APR | APR |
|---|---|---|---|---|---|---|
| D | 15/12/07 | REVISION GENERAL | CC/JC | HJ | EW | AL/RB |
| C | 05/12/07 | DISEÑO CONCEPTUAL | CC/JC | HJ | EW | AL/RB |
| B | 27/11/07 | REVISION GENERAL | CC/JC | HJ | EW | AL/RB |
| A | 10/10/07 | INFORMACION | CC/JC | HJ | EW | AL/RB |

Gener una empresa AES

PROYECTO
HIDROELECTRICO ALTO MAIPO
INGENIERIA BASICA

cade-idepe POCH Ingeniería Norconsult

AREA 020 — ESTUDIOS BASICOS DISEÑO CONCEPTUAL

TITULO
OBRAS SUPERFICIALES LAS LAJAS
RECTIFICACION DE CAUCE RIO COLORADO
ENROCADO PROTECCION

ESCALA: INDICADAS

| | NOMBRE | FIRMA | FECHA |
|---|---|---|---|
| PROY. | CC/JC | | 10-10-07 |
| REV. | HJ | | 10-10-07 |
| APR. | EW | | 10-10-07 |
| APR. | AL/RB | | 10-10-07 |

No PLANOS GCAM: 020-CI-PLA-044 — REV. D

| HORA | FECHA EMISION | EMISION N° |
|---|---|---|
| $TIME$ | $DATE$ | |

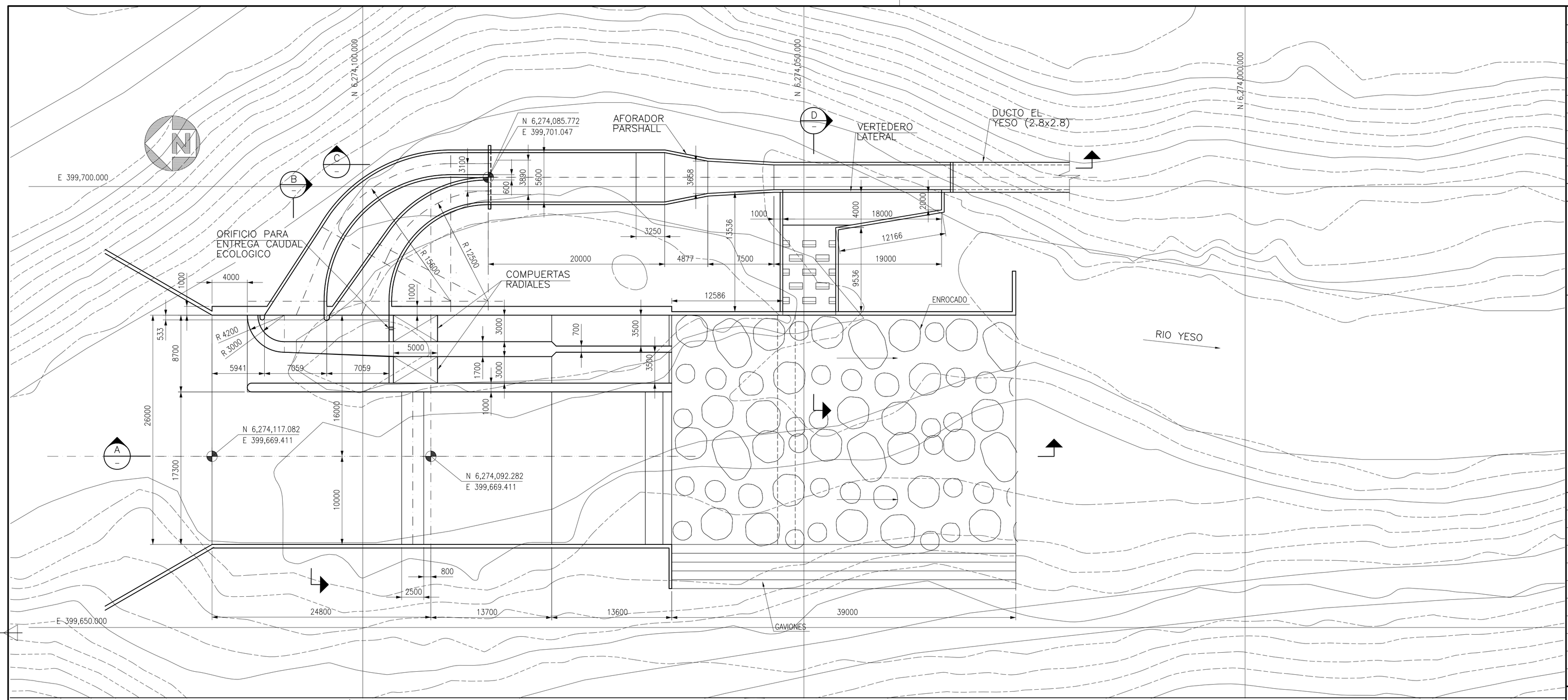


## PLANTA BOCATOMA EL YESO

ESC. 1:250

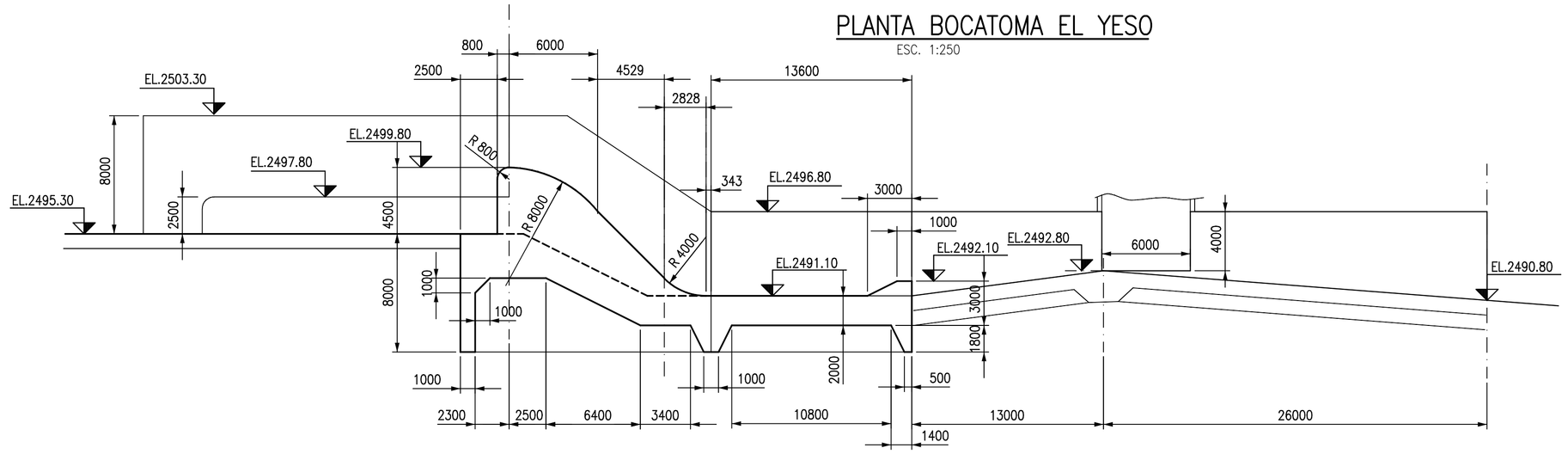


SECCION A
ESC.1:250

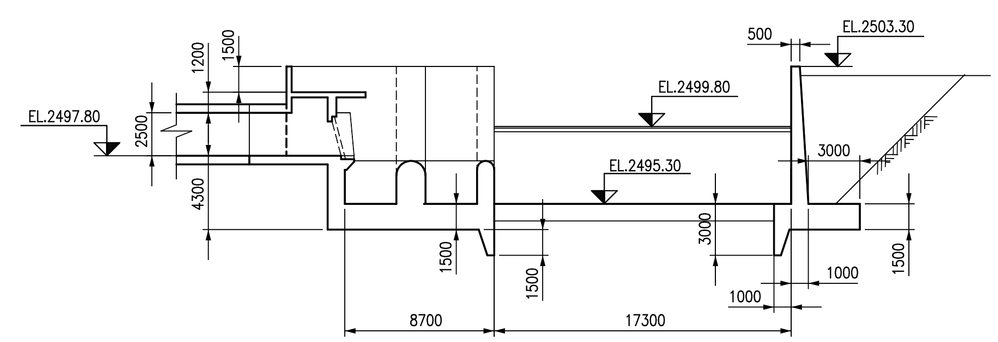


SECCION B
ESC.1:250

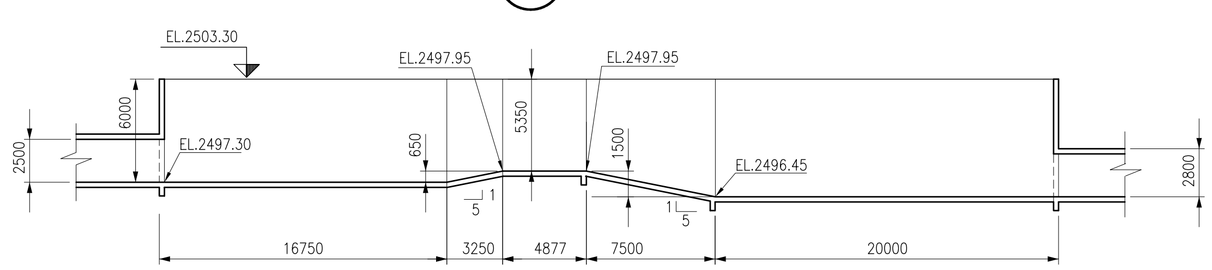


SECCION C
ESC.1:250

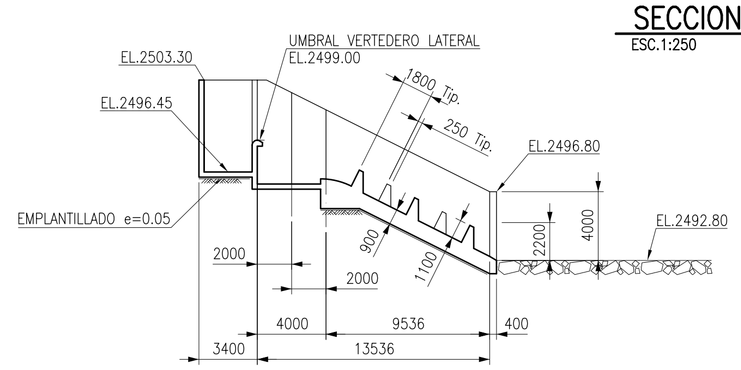


SECCION D
ESC.1:250

| REFERENCIAS / ESTANDARES | |
|---|---|
| NUMERO | DESCRIPCION |
| 020-CI-PLA-028 | DISPOSICION GENERAL |

SIMBOLOGIA

EMISIONES

| EMI | FECHA | DESCRIPCION | PROY | REV | APR | APR |
|---|---|---|---|---|---|---|
| F | 16/05/08 | PARA INFORMACION | PQ | FD | EW | AL/RB |
| E | 09/05/08 | PARA INFORMACION | PQ | FD | EW | AL/RB |
| D | 15/12/07 | APROBACION Y COMENTARIOS | CC/FD | HJ | EW | AL/RB |
| C | 05/12/07 | INFORMACION | CC/FD | HJ | EW | AL/RB |
| B | 27/11/07 | PARA INFORMACION | CC/FD | HJ | EW | AL/RB |
| A | 05/09/07 | Cordinacion Interna | CC | HJ | EW | AL/RB |

REVISIONES

| REV | FECHA | DESCRIPCION | PROY | REV | APR | APR |
|---|---|---|---|---|---|---|
| E | 16/05/08 | REVISION GENERAL | PQ | FD | EW | AL/RB |
| D | 09/05/08 | REVISION GENERAL | PQ | FD | EW | AL/RB |
| C | 05/12/07 | DISEÑO CONCEPTUAL | CC/FD | HJ | EW | AL/RB |
| B | 27/11/07 | REVISION GENERAL | CC/FD | HJ | EW | AL/RB |
| A | 05/09/07 | REVISION GENERAL | CC | HJ | EW | AL/RB |

Gener una empresa AES

PROYECTO
HIDROELECTRICO ALTO MAIPO
INGENIERIA BASICA

cade-idepe · Norconsult · POCH Ingeniería

AREA 020 — ESTUDIOS BASICOS INGENIERIA CONCEPTUAL

TITULO
OBRAS SUPERFICIALES EL YESO
CAPTACION RIO YESO
BOCATOMA, REJA Y VERTEDERO

| ESCALA | | NOMBRE | FIRMA | FECHA |
|---|---|---|---|---|
| Indicadas | PROY. | CC/FD | | 05-09-07 |
| | REV. | HJ | | 05-09-07 |
| | APR. | EW | | 05-09-07 |
| | APR. | AL/RB | | 05-09-07 |

No PLANOS GCAM: 020-HI-PLA-020 — REV. E

EMISION N° · FECHA EMISION $DATE$ · HORA $TIME$