# EL MOLINO HYDROELETRIC PROJECT

## ENVIRONMENTAL IMPACT STUDY
## VOLUME III of V
## CHAPTER 4

**DOCUMENT 2148-04-EV-ST-020-04**

**REVIEW No. 0**

| Review | Modifications | Date |
|---|---|---|
| 0 | Original Version | 2012-03-30 |
| | | |
| | | |
| | | |
| | | |

**Elaboration - Review - Approval**

| Review | Developed by: | | Reviewed by: | | Approved by: | |
|---|---|---|---|---|---|---|
| | Name: | Signature | Name: | Signature | Name: | Signature |
| 0 | SAG/HMV | | HMV | | HMV | |
| | | | | | | |
| | | | | | | |
| | | | | | | |
| | | | | | | |
| | | | | | | |

The copyright of this document is from HMV ENGINEERS LTDA, which is exempt from any liability if this document is altered or modified. It is not authorized its use or reproduction in whole or in part for purposes other than contracted.

## GENERAL CONTENT

| VOLUME I | |
|---|---|
| **Description** | **Document** |
| Executive Summary | 2148-04-EV-ST-020-00 |
| Chapter 1 – General | 2148-04-EV-ST-020-01 |
| Chapter 2 - Description of the Project | 2148-04-EV-ST-020-02 |
| **VOLUME II** | |
| Chapter 3 - Characterization of the Project influence of the area | 2148-04-EV-ST-020-03 |
| **VOLUME III** | |
| Chapter 4 - Demand, use, exploitation and/or affectation of natural resources | 2148-04-EV-ST-020-04 |
| Chapter 5 - Environmental assessment | 2148-04-EV-ST-020-05 |
| Chapter 6 - Zone of environmental management of the Project | 2148-04-EV-ST-020-06 |
| Chapter 7 - Environmental management plan | 2148-04-EV-ST-020-07 |
| Chapter 8 - Plan follow up and monitoring of the project | 2148-04-EV-ST-020-04 |
| Chapter 9 - Contingency plan | 2148-04-EV-ST-020-09 |
| Chapter 10 - Abandonment and final restoration Plan | 2148-04-EV-ST-020-10 |
| Chapter 11 -Investment plan of 1% | 2148-04-EV-ST-020-11 |
| Bibliography | 2148-04-EV-ST-020-12 |
| **VOLUME IV** | |
| Annexes | 2148-04-EV-ST-020-13 |
| **VOLUME V** | |
| Cartographies | 2148-04-EV-ST-020-14 |

## TABLE OF CONTENTS

**Page**

| | | |
|---|---|---|
| **4** | **DEMAND FOR NATURAL RESOURCES** | **4-1** |
| **4.1** | **GRANTING OF WATERS** | **4-1** |
| **4.1.1** | **San Matias River** | **4-1** |
| **4.1.2** | **Creek 6.** | **4-4** |
| **4.1.3** | **Creek 5.** | **4-4** |
| **4.2** | **OCCUPANCY OF RIVER BED** | **4-4** |
| **4.2.1** | **Facilities in the San Matias River** | **4-4** |
| 4.2.1.1 | Collection facilities | 4-4 |
| 4.2.1.2 | Structure of discharge to the San Matias River | 4-5 |
| **4.2.2** | **Minor Streams** | **4-5** |
| 4.2.2.1 | Creeks on the planned access roads | 4-5 |
| 4.2.2.2 | Creek in the discharge channel | 4-7 |
| **4.2.3** | **Hydraulic Studies** | **4-7** |
| 4.2.3.1 | Facilities in San Matias River in the collection area | 4-8 |
| 4.2.3.2 | Facilities in the San Matias River in discharge area | 4-9 |
| 4.2.3.3 | Minor Streams | 4-10 |
| **4.2.4** | **Undermining** | **4-11** |
| **4.2.5** | **Flow Dynamics of intervened sectors** | **4-12** |
| 4.2.5.1 | Facilities in San Matias River in the collection area | 4-12 |
| 4.2.5.2 | Creeks on the planned access roads | 4-12 |
| **4.3** | **WASTEWATER DISCHARGES** | **4-13** |
| **4.4** | **FOREST RESOURSES** | **4-16** |
| **4.5** | **ATMOSPHERIC EMISSIONS** | **4-20** |
| **4.6** | **SOLID WASTE** | **4-21** |
| **4.7** | **CONSTRUCTION MATERIALS** | **4-21** |
| **4.8** | **DEPOSIT AREAS** | **4-21** |

## LIST OF CHARTS

**Page**

Table 4-1: Values obtained for the physical and chemical variables of water .....4-1

Table 4-2. Calculation of the index NSF - WQ of the San Matias River.....4-2

Table 4-3: Instream Flow and levels required in the rectangular drain canal month by month 4-3

Table 4-4: Results of sewer design for projected roads TR = 10 years .....4-6

Table 4-5: Dimensions of sink.....4-7

Table 4-6: Design flows on the San Matias River and flows that intercept the roads of the El Molino hydroelectric project .....4-8

Table 4-7: Levels in the San Matias River .....4-8

Table 4-8: Facilities in the San Matias River in the discharge site.....4-10

Table 4-9: Levels and flow velocity of the discharge channel with the San Matias River 4-10

Table 4-10: Design results for sewers TR = 10 years for planned roads .....4-11

Table 4-11: Location of discharge in the El Molino hydroelectric project .....4-15

Table 4-12. Registered species for the dense forest of Guadua.....4-17

Table 4-13. Recorded Species for the open forest .....4-17

Table 4-14. Recorded Species for the high secondary vegetation.....4-18

Table 4-15. Recorded species for the secondary low vegetation.....4-19

Table 4-16. Recorded species for the clean grass fields .....4-19

Table 4-17. Recorded Species for the wooded grass fields.....4-19

Table 4-18. Recorded Species for the weedy grass fields.....4-20

Table 4-19. Estimates of basal area and volume of coverage in the area of project intervention. .....4-20

Table 4.20. Location coordinates for grinding plants .....4-21

Table 4.21. Deposits of excess material from excavation.....4-22

## LIST OF FIGURES

**Page**

Figure 4-1: Calibration curve of rectangular drain canal ..... 4-3
Figure 4-2: Crossing of creek 8 and discharge channel ..... 4-7
Figure 4-3: General outline of the treatment system ..... 4-13
Figure 4-4: Grease Trap scheme ..... 4-14
Figure 4-5: Sedimentation scheme ..... 4-14

## LIST OF ANNEXS

Annex 13. Form for the allocation of water

Annex 14. Form for Permit for occupation of river bed

Annex 15. Form for permissions of discharges

Annex 16. Prefabricated treatment system.

Annex 17. Application for forest usage

## LIST OF CARTOGRAPHY

| | |
|---|---|
| 2148-04-CV-DW-017. | Locations of minor currents |
| 2148-04-CV-DW-022. | Collection - Plant and sections |
| 2148-04-CV-DW-023. | Sand Remover - Plant and sections |
| 2148-04-CV-DW-052. | Discharge Channel - Floor - Profile |
| 2148-04-CV-DW-76. | Deposits - general Location |
| 2148-04-CV-DW-77. | Deposits - Plant and profile |

# 4 DEMAND FOR NATURAL RESOURCES

## 4.1 GRANTING OF WATERS

### 4.1.1 San Matias River

El Molino hydroelectric project, which will be edge type without water reservoir, will have a capacity of 21 MW, for a design flow of 10 m³ /s and a net leap of 238.4 m. The conduction facilities are approximately 3.4 km in total length.

The estimated average flow for the river collection site is 9.54 $m^3$ /s, water with good quality, as can be seen in Table 4-1 and in Table 4-2 .

**Table 4-1: Values obtained for the physical and chemical variables of water**

| Variable | Sampling Site San Matias River | | | | | | |
|---|---|---|---|---|---|---|---|
| | Site 1 - CAP | | Site 2 - MED1 | | Site 3 - MED 2 | Site 4 - DES | |
| | Summer Sampling | Winter Sampling | Summer Sampling | Winter Sampling | Summer Sampling | Summer Sampling | Winter Sampling |
| Air Temperature ( °C) | 24.00 | | 25.00 | | 26.00 | 25.00 | |
| The water temperature ( °C) | 22.70 | 22.50 | 22.00 | 22.00 | 22.40 | 21.40 | 20.20 |
| Electrical conductivity ( μ S/cm) | 43.90 | 33.80 | 45.00 | 28.00 | 45.00 | 38.70 | 43.90 |
| Turbidity (NTU) | 2.50 | 96.90 | 2.21 | 315.00 | 2.30 | 24.70 | 27.00 |
| Total solids (mg/l) | 56.00 | 154.00 | 57.00 | 512.00 | 52.00 | 76.00 | 88.00 |
| Suspended solids (mg/l) | <7 | 111.00 | <7 | 477.00 | <7 | 34.00 | 39.00 |
| Sedimentary solids (ml/l) | <0.1 | 43.00 | <0.1 | 35.00 | <0.1 | 0.10 | 49.00 |
| Saturation % OD | 89.50 | 67.03 | 92.00 | 70.95 | 94.00 | 95.20 | 81.74 |
| Dissolved oxygen (DO) (mg $OR_2$ /l) | 7.69 | 5.90 | 8.40 | 6.30 | 8.10 | 8.42 | 7.50 |
| PH | 7.65 | 7.23 | 7.40 | 7.32 | 7.42 | 7.35 | 7.26 |
| Total Phosphorus (mg P/l) | <0.020 | <0.015 | <0.020 | 0.71 | <0.020 | 0.05 | <0.015 |
| Organic phosphorus (mg P/l) | <0.020 | | <0.020 | | <0.020 | <0.020 | |
| Total Orthophosphates (mg $PO_4^{3-}$ /l) | <0.150 | 0.30 | <0.150 | 0.30 | <0.150 | <0.150 | 0.09 |
| Ammoniacal nitrogen (mg $N\text{-}NH_3$ /l) | <1.00 | <1.00 | <1.00 | <1.00 | <1.00 | <1.00 | <1.00 |
| Nitrates (mg $N\text{-}NH_3$ /l) | <1.50 | <0.9 | <1.50 | <0.9 | <1.50 | <1.50 | <0.9 |
| Kjeldahl nitrogen (mg/l) | <1.00 | <1.00 | <1.00 | <1.00 | <1.00 | <1.00 | <1.00 |
| Sulphates ($SO_4$ mg $^{2-}$ /l) | <3.00 | 5.00 | <3.00 | 5.00 | <3.00 | <3.00 | 9.00 |
| Total Iron (mg Fe/l) | 0.22 | 3.13 | 0.19 | 1.64 | 0.23 | 1.24 | 1.40 |
| Total Alkalinity (mg $CaCO_3$ /l) | 21.00 | 26.00 | 21.40 | 23.00 | 22.70 | 20.50 | 27.00 |
| Total Hardness (mg/l $CaCO_3$ ) | 14.40 | 24.00 | 14.50 | 16.00 | 15.70 | 16.30 | 20.00 |
| $DBO_5$ total (mg $O_2$/l) | <4.00 | <2.43 | <4.00 | <2.43 | <4.00 | <4.00 | <2.43 |

**Table 4-1: Values obtained for the physical and chemical variables of water (Continued)**

| Variable | Sampling Site San Matias River | | | | | | |
|---|---|---|---|---|---|---|---|
| | Site 1 - CAP | | Site 2 - MED1 | | Site 3 - MED 2 | Site 4 - DES | |
| | Summer Sampling | Winter Sampling | Summer Sampling | Winter Sampling | Summer Sampling | Summer Sampling | Winter Sampling |
| $DBO_5$ soluble (mg $O_2$/l) | <4.00 | | <4.00 | | <4.00 | <4.00 | |
| DQO total (mg $O_2$/l) | <12.0 | <12.9 | <12.0 | 17.00 | <12.0 | <12.0 | <12.9 |
| Coli forms (MPN/100 ml) | $60 \times 10^3$ | >2419.6 | $25 \times 10^4$ | >2419.6 | $160 \times 10^3$ | $14 \times 10^4$ | >2419.6 |
| Fecal Coli forms (MPN/100 ml) | $3.5 \times 10^2$ | >2419.6 | $1.3 \times 10^2$ | 866.40 | $2 \times 10^2$ | $0.2 \times 10^4$ | 648.80 |
| Detergents (SAAM mg/l) | <0.100 | 0.34 | <0.100 | 0.41 | <0.100 | <0.100 | 0.11 |

**Table 4-2. Calculation of the index NSF - WQ of the San Matias River**

| Variable | Weight | Site 1- Capture | | Site 2 - middle section 1 | | Site 3 - middle section 2 | Site 4 - discharge | |
|---|---|---|---|---|---|---|---|---|
| | | Summer | Winter | Summer | Winter | Summer | Summer | Winter |
| Dissolved Oxygen | 0.17 | 95 | 87 | 97 | 91 | 98 | 98 | 93 |
| Coli forms | 0.16 | 32 | **17** | 41 | **23** | 37 | 18 | 26 |
| PH | 0.11 | 92 | 92 | 93 | 93 | 93 | 93 | 93 |
| DBO | 0.11 | >61 | 93 | >61 | 93 | >61 | >61 | 93 |
| Temperature | 0.1 | 93 | 85 | 93 | 80 | 93 | 93 | 85 |
| Orthophosphates | 0.1 | >94 | 81 | >94 | **42** | >94 | >94 | 96 |
| Nitrates | 0.1 | >96 | 97 | >96 | 96 | >96 | >96 | 97 |
| Turbidity | 0.08 | 92 | **19** | 92 | **5** | 92 | 57 | 55 |
| Solid | 0.07 | 87 | 78 | 87 | **20** | 87 | 85 | 84 |
| **NFS-WQI** | | **>79.85** | **71** | **>81.74** | **63** | **63** | **>75.29** | **78** |

Before capturing the waters for the generation, it is necessary to ensure the passage of Environmental Guaranty flow or instream flow (EGF), by means of the works described in section 2.2.2.1

Given that the EGF, whose calculation is found in chapter 7 of this study, is been proposed as a flow rate which varies month by month, some regulatory elements and measures have been prepared, allowing the EGF to be accomplished each month. For this it has been set out that the flow coming out of the hole provided for this purpose continues toward a shock absorber tank, in which a drain rectangular canal is found, allowing the measurement of the flow rate that will be handed over to the river. The rectangular drain canal has a length of 1.50 m and a height of 1.0 m. The flow that goes through the hole will be regulated by a gate of equal dimensions, allowing making adjustments every month.

For the correct determination of the opening, after the hole, a rectangular drain canal of thin crest and a level and scope sensor for direct reading will be placed. The drain canal was chosen because it is a type of element that is very recognized for the measurement of flow rates, being extensively used in the hydraulic laboratories where precise flow rate measurements are required. The calibration of the drain canal is presented in Figure 4-1

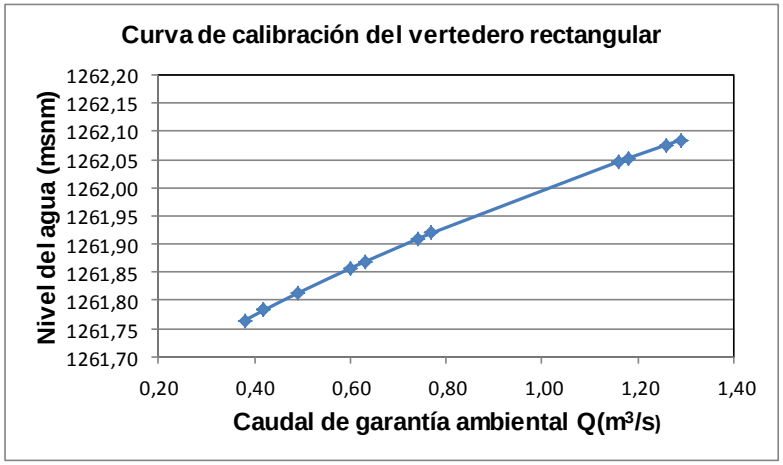


**Figure 4-1: Calibration curve of rectangular drain canal**

It can be observed that the height needed for the level for the maximum flow rate (1.29 $m^3$ /s) is 0.60 m, and the drain canal has a height of 1.00 m, i.e. works adequately for approved flows.

As mentioned before, the tank will have a level and scope (rule) sensor that allows monitoring the levels and adjusting the flow rate delivered to the river. Levels and flows rates will be recorded and reports will be rendered semiannually, which will serve the Corporation to facilitate verification. In Table 4-3 it is showed, for each month, the instream flow proposed and the required level in the rectangular drain canal for each one of these flows.

**Table 4-3: Instream Flow and levels required in the rectangular drain canal month by month**

| Month | Flow ($m^3$ /s) | Water levels (msnm) |
|---|---|---|
| **January** | 0.60 | 1261.86 |
| **February** | 0.49 | 1261.81 |
| **March** | 0.77 | 1261.92 |
| **April** | 1.16 | 1262.05 |
| **May** | 0.74 | 1261.91 |
| **June** | 0.63 | 1261.87 |
| **July** | 0.38 | 1261.76 |
| **August** | 0.42 | 1261.78 |
| **September** | 0.42 | 1261.78 |
| **October** | 1.29 | 1262.09 |
| **November** | 1.26 | 1262.08 |
| **December** | 1.18 | 1262.05 |

The plant and work section of the EIF is presented in Cartography 2148-04-CV-DW-023.

For construction work, it is required 20 l/s of the San Matias River in the collection area, in a river area defined by the following coordinates

| | |
|---|---|
| 880.463 E | 1.162.735 N |
| 880.829 E | 1.162.570 N |

### 4.1.2 Creek 6.

During the construction process, in the work front of the relief pipeline and at the conduction tunnel exit, for the operation of the crusher plant, as well as the construction of the tunnel, it is required a flow of 3.0 l/s, which will be taken from Creek 6, whose collection will be in the section defined by the following coordinates

| | |
|---|---|
| 882.142 E | 1.160.492 N |
| 882.192 E | 1.160.716 N |

The flow of this creek, with a return period of 2.33 years, in the section where the collection takes place varies between 440 l/s and 450 l/s.

### 4.1.3 Creek 5.

For the construction of the project located on front of the house of engines, it is required a flow of 3.0 l/s, which will be taken from creek 5, in a sector defined by the following coordinates:

| | |
|---|---|
| 882-659 E | 1.160.473 N |
| 883.016 E | 1.160.637 N |

The flow of this creek has a return period of 2.33 years, in the section where the collection can take place, and it is of 4.24 $m^3$ /s.

It is presented in Annex 13, the application forms for water concessions.

## 4.2 OCCUPANCY OF RIVER BED

It is described next, each one of the projects that will intervene the channels of the San Matias River and the minor flows for the development of the El Molino hydroelectric project, which are also the subject of permission of occupation of channels.

### 4.2.1 Facilities in the San Matias River

#### 4.2.1.1 Collection facilities

The facilities of bypass or collection will be placed in the coordinates 880,829 E and 1,162,570 N, 1,260 msnm, where the San Matias River presents favorable conditions for the location of these structures.

The derivation flows will be done from the starting point of the construction of a concrete weir of approximately 4.0 m in height and 39.0 m in length, with a crest and an elevation of 1,264 MASL, and it will have on the right side, a bottom discharge composed of a radial gate of 5.0 x 5.0m. The area that will occupy the poundage generated by the weir which will be of 1.2 ha. The plant and weir profile are presented in Cartography 2148-04-CV-DW-022.

The weir section will allow the passage of a stream of 1,246 $m^3$ /s, corresponding to a return period of 100 years.

An intake construction of the lateral type will be implemented on the right side of the weir, made up of rectangular openings sized to derive the flow to the conduction system. Passing through the intake openings it reaches a channel that functions as a gravel trap that connects with the conduction channel by means of a second set of opening or holes. The first openings system is composed of two holes of 2.50 m wide and 2.15 m in height, and the second system by three holes of 1.80 m wide and 1.70 m in height. At the end of the gravel scraper there has been prepared a gate of 2.50 m wide and 2.50 m high.

In Cartography 2148-04-CV-DW-023 are shown the facilities and the collection sections.

#### 4.2.1.2 Structure of discharge to the San Matias River

The project discharging facilities are formed by a still tank of 2 m in length and 8 meters wide that receives the waters from the channel - tank located at the house of engines by means of a control discharge. On the rear of the tank is has been set up an ascendant ramp of 1 m of height and continuing then to a box culvert of 163 m which takes the water to the San Matias River in hydraulic conditions at free flow.

The box culvert is divided into five sections with slopes of 9.9 % in 15.7m in length, 28.5 % in 17.7 m, 9.4 % in 36.4m, 72.7 % in 52.9 m and 95.9 % at 40.5 m. The box culvert will be square with 1.5 m on the side and the flow regime within will be supercritical with speeds between 10 m/s in the initial section (lower gradient) and 25 m/s in the final section (upper gradient).

The box culvert will have anchor keys in its entire length each 10 m and on the third section a viaduct of light of 8 m allowing the crossing of a minor stream. In the viaduct the box culvert will be supported by two piles of 1.2 m in diameter with rock support. At the end of the structure of discharge it is foreseen a rocky bed that will allow the support of the concrete structure in the form of a ski jumping ramp, which will expel the waters of the San Matias River at an elevation of 947.0 meters above sea level, at the point of coordinates 883,034 E and 1 '160,806 N, measured at the intersection axis of the channel and the river bank (see cartography 2148-04-CV-DW-052).

### 4.2.2 Minor Streams

In the existing minor streams that cross the access roads to the project and the discharge channel, there will be sewer drainage work of box, circular, pontoon and washtub type. The Cartography 2148-04-CV-DW-017 presents the location and numbering of creeks in the influence area of the project.

#### 4.2.2.1 Creeks on the planned access roads

In the crossings of the project access roads with the creeks, sewer drains of circular, box and washtub types will be constructed here. The designs of the sewers were calculated for a return period of 10 years, as will be explained in section 4.2.3.3 of hydraulic studies.

Table 4-4 shows the design results of the projected sewers and in

Table 4-5 the dimensions of the sink.

**Table 4-4: Results of sewer design for projected roads TR = 10 years**

| ABSCISSA | Road | Coordinates in meters | | |
|---|---|---|---|---|
| | | Point | X(E) | Y(N) |
| Km 0+159.65m | House of engines | 1 | 884.034 | 1.160.105 |
| | | 2 | 884 036. | 1.160 097. |
| | | 3 | 884 061. | 1.160 103. |
| | | 4 | 884 059. | 1.160 111. |
| Km 0+481.41m | House of engines | 1 | 883.810 | 1.160.171 |
| | | 2 | 883 816. | 1.160 165. |
| | | 3 | 883 832. | 1.160 172. |
| | | 4 | 883 828. | 1.160 178. |
| Km 0+714.75m | House of engines | 1 | 883.665 | 1.160.256 |
| | | 2 | 883 667. | 1.160 245. |
| | | 3 | 883 694. | 1.160 260. |
| | | 4 | 883 688. | 1.160 271. |
| Km 2+086.89m | House of engines | 1 | 882.897 | 1.160.538 |
| | | 2 | 882 903. | 1.160 528. |
| | | 3 | 882 932. | 1.160 538. |
| | | 4 | 882 924. | 1.160 551. |
| Km 1+382.86m | To relief pipeline | 1 | 882.202 | 1.160.552 |
| | | 2 | 882.207 | 1.160.550 |
| | | 3 | 882.216 | 1.160.566 |
| | | 4 | 882.209 | 1.160.569 |
| K m1+585.42m | To relief pipeline | 1 | 882.215 | 1.160.577 |
| | | 2 | 882.222 | 1.160.573 |
| | | 3 | 882.229 | 1.160.587 |
| | | 4 | 882.225 | 1.160.589 |
| K m1+795.71m | To relief pipeline | 1 | 882.229 | 1.160.600 |
| | | 2 | 882 235. | 1.160 599. |
| | | 3 | 882 242. | 1.160 612. |
| | | 4 | 882 236. | 1.160 613. |
| Km 2+958.63m | To collection | 1 | 881.339 | 1.162.427 |
| | | 2 | 881.146 | 1.162.420 |
| | | 3 | 881.174 | 1.162.451 |
| | | 4 | 881.167 | 1.162.456 |

**Table 4-5: Dimensions of sink**

| ABSCISSA | Road | Coordinates | | Creek - Point | Length (m) | Width (m) |
|---|---|---|---|---|---|---|
| | | X(E) | Y(N) | | | |
| K m1 + 373.78m | House of engines | 883,326<br>883,335<br>883,353<br>883,344 | 1,160,473<br>1.160.4607<br>1,160,484<br>1,160,494 | Creek 4 | 7.00 | 4.00 |

#### 4.2.2.2 Creek in the discharge channel

The Creek 8 is crossed by the channel of discharge in the coordinates 882,963 E and 1'160,737 N.

The discharge channel passes 1.8 m above the bed of the creek, and it will support two separate piles of 8.0 m, as presented in Figure 4-2 . The separation between the piles was designed taking into account the height of the water (0.25 m) for a return period of 100 years, as it will be explained in section 4.2.3.3 of hydraulic studies.

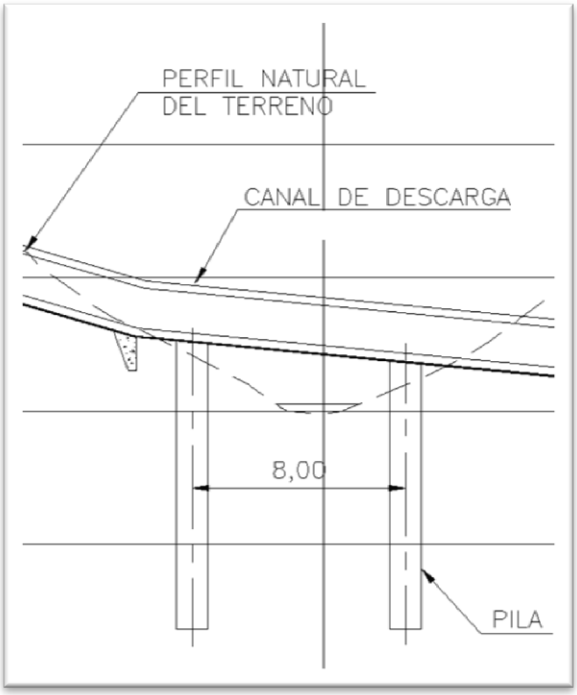


Figure 4-2: Crossing of creek 8 and discharge channel

### 4.2.3 Hydraulic Studies

In order to determine the dimensions of the structures to be designed and its correct hydraulic operation, with the information of the maximum flow rates and the sections of the San Matias River and intervened flows, it was proceeded to review the levels for crescents of different return periods in order to check the operation of the structures intervening the channels (see Table 4-6).

**Table 4-6: Design flows on the San Matias River and flows that intercept the roads of the El Molino hydroelectric project**

| River/Creek | Point | Road/Project Site | Return Period Tr (years) | | | | | |
|---|---|---|---|---|---|---|---|---|
| | | | 2.33 | 5 | 10 | 25 | 50 | 100 |
| San Matias River | - | Collection | 329 | 447 | 580 | 799 | 1003 | 1246 |
| | - | Discharge | 347 | 467 | 602 | 822 | 1026 | 1268 |
| Creek 1 | | Way to house of engines | 6.97 | 8.78 | 10.60 | 13.90 | 17.02 | 21.09 |
| Creek 2 | | Way to house of engines | 0.26 | 0.33 | 0.40 | 0.52 | 0.64 | 0.79 |
| Creek 3 | | Way to house of engines | 5.09 | 6.42 | 7.75 | 10.16 | 12.44 | 15.41 |
| Creek 4 | | Way to house of engines | 3.02 | 3.81 | 4.59 | 6.02 | 7.37 | 9.14 |
| Creek 5 | | Way to house of engines | 4.24 | 5.35 | 6.45 | 8.46 | 10.36 | 12.84 |
| Creek 6 | TO | Road to relief pipeline | 0.44 | 0.55 | 0.67 | 0.87 | 1.07 | 1.33 |
| Creek 6 | B | Road to relief pipeline | 0.46 | 0.58 | 0.70 | 0.92 | 1.13 | 1.40 |
| Creek 6 | C | Road to relief pipeline | 0.50 | 0.63 | 0.77 | 1.00 | 1.23 | 1.52 |
| Creek 7 | | Road to collection | 0.68 | 0.85 | 1.03 | 1.35 | 1.65 | 2.05 |
| Creek 8 | | Discharge Channel | 0.34 | 0.43 | 0.52 | 0.68 | 0.84 | 1.04 |

#### 4.2.3.1 Facilities in San Matias River in the collection area

The hydraulic modeling of the collection is presented of two scenarios: the existing conditions, i.e. without the projection of any structure and the conditions planned which include the weir, collection, and sand remover.

Because of the importance of the structures to be deployed in this river, it was used the program HEC-RAS 3.1.3 developed by the engineers of the Army Corps of the United States, to determine the levels of water associated to the crescents with an specific return period, pre-dimensioning and locating the hydraulic structures for the smooth functioning of the project. For the roughness coefficient it was used a value of n = 0.035, except in sections modeled in the dam, where it was used n = 0.015 (smooth concrete).

The level of the San Matias River with and without the structures to be built for return periods of 50 to 100 years, are presented in Table 4-7 .

Observing the levels of chart Table 4-7 and the top levels of the structures it is concluded:

- In the weir, the lateral walls of protection rise up to 1,270.70 meters above sea level and the level for a return period of 100 years, reaches the 1,268.70 meters above sea level, while keeping a free edge of 2, 00 m that is considered safe and suitable for the operation of this type of structures.

**Table 4-7: Levels in the San Matias River**

| Levels in the San Matias River in sections with structures | | | |
|---|---|---|---|
| Structure | | Return Period | |
| | | 50 Years | 100 Years |
| Weir | Without | 1263.28 | 1263.78 |

| Levels in the San Matias River in sections with structures | | | |
|---|---|---|---|
| | With | 1268.06 | 1268.70 |
| Conduction Channel | Without | 1264.77 | 1265.37 |
| | With | 1262.82 | 1263.21 |
| Sand remover | Without | 1263.53 | 1264.30 |
| | With | 1263.50 | 1264.18 |

Note:
- Without: refers to the natural conditions of the river without any type of structure.
- With: hydraulic structures built

- For the channel that will carry the waters between the collection and sand remover, the water level in the river is located at 1,263.21 meters above sea level and the side wall of this channel is located at 1,263.55 meters above sea level, which is above the level of the crescent. In case of a given crescent with return periods greater than 100 years, the level of the river could overlap the walls of the channel, but the plant would be shut down. Once the rising stream has passed the cleaning of this channel will take place and the operation of the plant will be reassumed.
- Also, the side wall of the sand remover arrives at the bound fo 1,265.0 meters above sea level and the level of the stream to the bound 1,264.18, maintaining a free edge of 0.82 m.

#### 4.2.3.2 Facilities in the San Matias River in discharge area

It is presented in this numeral the hydraulic verification of the discharge canal toward the San Matias River. The project discharging facilities are formed by a still tank of 2 m in length and 8 meters wide that receives the waters from the channel - tank located at the house of engines by means of a control discharge. On the rear of the tank is has been set up an ascendant ramp of 1 m of height and continuing then to a box culvert of 163 m which takes the water to the San Matias River in hydraulic conditions at free flow.

The box culvert is divided into five sections with slopes of 9.9 % in 15.7m in length, 28.5 % in 17.7 m, 9.4 % in 36.4m, 72.7 % in 52.9 m and 95.9 % at 40.5 m. The box culvert will be square with 1.5 m on the side and the flow regime within will be supercritical with speeds between 10 m/s in the initial section (lower gradient) and 25 m/s in the final section (upper gradient).

The box culvert will have anchor keys in its entire length each 10 m and on the third section a viaduct of light of 8 m allowing the crossing of a minor stream. In the viaduct the box culvert will be supported by two piles of 1.2 m in diameter with rock support. At the end of the structure of discharge it is foreseen a rocky bed that will allow the support of the concrete structure in the form of a ski jumping ramp, which will expel the waters of the San Matias River at an elevation of 947.0 meters above sea level, at the point of coordinates 883,034 E and 1 '160,806 N, measured at the intersection axis of the channel and the river bank (see cartography 2148-04-CV-DW-052).

The hydraulic model was conducted using the software HEC-RAS 4.0 of US Army Corps of Engineers. The discharge channel was modeled considering a Manning of 0.014, while the roughness of the San Matias River was established in 0,035.

The flow in the discharge channel is 10 $m^3$ /s, corresponding to the design flow of the project, while for the San Matias River different flows associated with different periods of return were

evaluated, estimated based on the rainfall-runoff model proposed by the Soil Conservation Service (SCS). Table 4-8 presents the flow rates for different periods of return in the San Matias River.

**Table 4-8: Facilities in the San Matias River in the discharge site**

| Tr (years) | 2.33 | 5 | 10 | 25 | 50 | 100 |
|---|---|---|---|---|---|---|
| Q ($m^3$ /s) | 347 | 467 | 602 | 822 | 1,026 | 1,268 |

Thanks to the ski jump design, it is ensured a slight influence on the dynamic of San Matias River as it can be seen in the Table, which lists the levels and speeds of the river with and without the project in the site of confluence with the discharge channel.

**Table 4-9: Levels and flow velocity of the discharge channel with the San Matias River**

| Tr (years) | Flow ($m^3$ /s) | | Speed (m/s) | | Water level (msnm) | |
|---|---|---|---|---|---|---|
| | Without a project | With project | Without a project | With project | Without a project | With project |
| 50 | 1,062 | 1,072 | 14.89 | 14.88 | 944.89 | 944.91 |
| 100 | 1,268 | 1,278 | 15.89 | 14.89 | 945.22 | 945.23 |

#### 4.2.3.3 Minor Streams

- **Creeks located in projected access roads**

Table 4-10 presents the design results of the facilities for the new project roads for flows with a return period of 10 years.

**Table 4-10: Design results for sewers TR = 10 years for planned roads**

| ABSCISSA | Road | Design Flow $Q_{10}$ ($m^3/s$) | Creek - Point | Type of Work / Dimension | Brace AND(m) | And/do | Q/Qll |
|---|---|---|---|---|---|---|---|
| Km 0+159.65m | House of engines | 10.60 | Creek 1 | **Drawer sewer**<br>Width B(m) =2.0<br>Depth H (m) =2.0 | 0.83 | 0.41 | 0.39 |
| Km 0+481.41m | House of engines | 0.40 | Creek 2 | **Circular Sewer** ø(m) =0.90 | 0.24 | 0.27 | 0.16 |
| Km 0+714.75m | House of engines | 7.75 | Creek 3 | **Drawer sewer**<br>Width B(m) =1.50<br>Depth H (m) =2.0 | 0.87 | 0.44 | 0.42 |
| Km 2+086.89m | House of engines | 6.45 | Creek 5 | **Drawer sewer**<br>Width B(m) =1.50<br>Depth H (m) =1.80 | 0.76 | 0.42 | 0.40 |
| Km 1+382.86m | TO relief pipeline | 0.67 | Creek 6 - To | **Circular Sewer** ø(m) =1.20 | 0.28 | 0.24 | 0.12 |
| Km 1+585.42m | TO relief pipeline | 0.70 | Creek 6 - B | **Circular Sewer** ø(m) =1.20 | 0.29 | 0.24 | 0.13 |
| Km 1+795.71m | TO relief pipeline | 0.77 | Creek 6 - B | **Circular Sewer** ø(m) =1.20 | 0.30 | 0.25 | 0.14 |
| Km 2+958.63m | To collection | 1.03 | Creek 7 | **Circular Sewer** ø(m) =1.20 | 0.35 | 0.29 | 0.19 |

### 4.2.4 Undermining

In order to evaluate the safety of structures by the effects of the undermining, it was determined the possibility of deepening the riverbed level, where structures are emplaced.

It is expected that the structures that are subject to undermining are those that are not grounded to the rock coming out of the channel.

The undermining was calculated as the sum of the general erosion and the one due to contraction in the riverbed. For this purpose, alternative procedures were was applied and obtaining averages out of the various results.

The maximum undermining expected in the collection is 1.0 m and in the sand remover is 2.0m, given that the rock substrate is expected to be found quickly. These undermining

correspond to the effect of crescents if no control measures are taken. Depending on these measures, the undermining may decrease.

At the weir and in the structure of discharge, undermining is not expected, because it will be anchored to rock. In the event that the structures present undermining, the following measures will be taken:

- The deflector next to the weir is as a preventive measure, the construction of a slab of 5.0 m in length and 0.40 m in thickness, in the case that the rock foundations are found very fractured or with weathered sections.
- To ensure the stability of the discharge structure, this will be based on healthy rock and in case of finding areas of weathered or very fractured rock, there will be treatments such as anchor bolts , protection slabs and concrete keys.

### 4.2.5 Flow Dynamics of intervened sectors

Next, an assessment is done of each one of the structures that were analyzed in the present chapter, from the point of view of the modifications that can occur in the river dynamics.

#### 4.2.5.1 Facilities in San Matias River in the collection area

For the analysis of the changes in the river dynamics at the site where the weir is located, there were run, the current existing conditions in the river and subsequent conditions, once the structure is built.

The flow regime of the river in existing conditions is supercritical, and in general the speed increases with the construction of the weir. For normal rising streams, the ski jump ramp raising the water into the air, dissipating some of the extra energy that was obtained caused by the raising in the weir and subsequently the falling in the rocks, dissipating the vast majority of this energy. In the case of the rising streams of a return period of 50 and 100 years, the ski jump ramp is drowned and there is simply a local variation that involves an acceleration of the flow and some sort of bump, drowned immediately downstream of the river. In both situations, once it gets out of the area of the weir, it starts a reduction of speed by increased friction on the floor and walls, until the reaching natural speed for such conditions.

#### 4.2.5.2 Creeks on the planned access roads

In general the design criteria sought to control the output speed of the works, to prevent undermining processes due to the effect of the high speeds of the discharges.

The work proposed corresponds to permanent flows, from the point of view of the river dynamics, and in none of them the alignment was changed, therefore, the discharge is done into the natural beds with competent materials.

The dissipation structures serrated type in each one of the facilities guarantee that the speeds of the deliveries in conditions of growing streams are tolerable by the river bed material.

The flow regimes are turbulent supercritical in all of the facilities for existing flows; the designed slopes of the box and circulars projected sewers, also generate regimes of this type

in all the facilities. There are no changes in the dynamics of river flows by the effect of the projected sewers.

Annex 14 presents the permit forms for the occupation of the riverbed.

## 4.3 WASTEWATER DISCHARGES

Before the discharge, the domestic and industrial wastewater will be treated with grease traps, sand removers, cleansers, septic tanks, and anaerobic filters, which will allow the reduction of the pollutant waste into the residual water, also the enforcement of environmental legislation (article 72 of Decree 1594 of 1984).

The treatment of domestic wastewater generated in offices will be a system consisting of a septic tank and anaerobic filter, whose scheme is presented in Figure 4-3 and for industrial wastewater a grease trap will be used (see Figure 4-4) and sedimentation (see Figure 4-5).

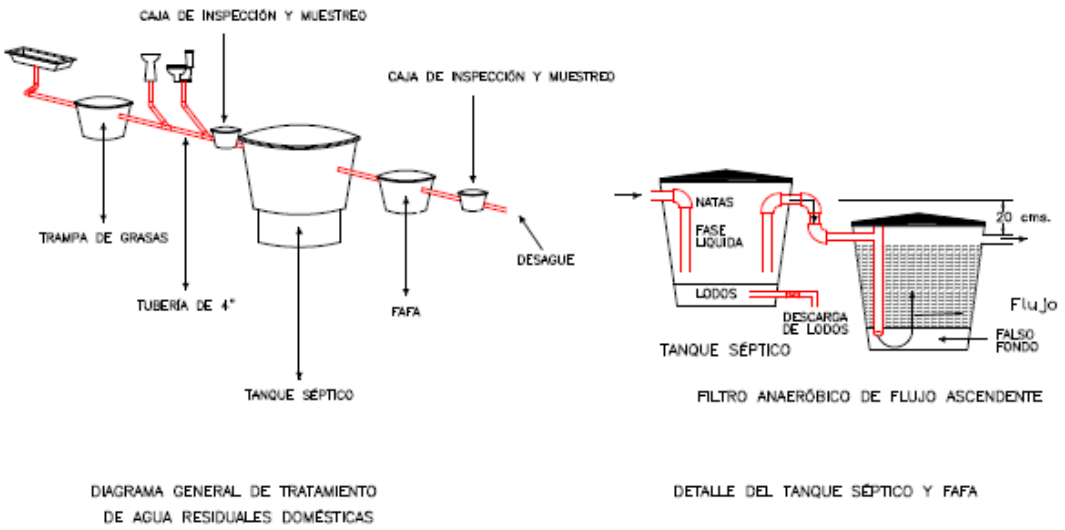


**Figure 4-3: General outline of the treatment system**

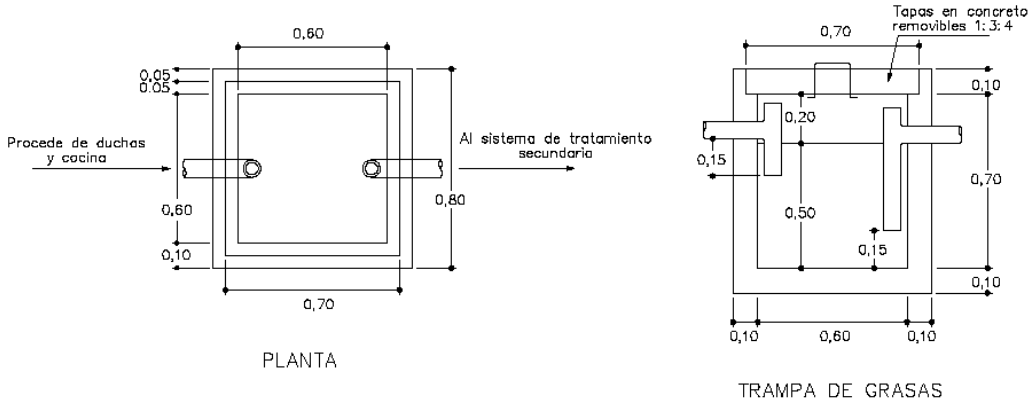


**Figure 4-4: Grease Trap scheme**

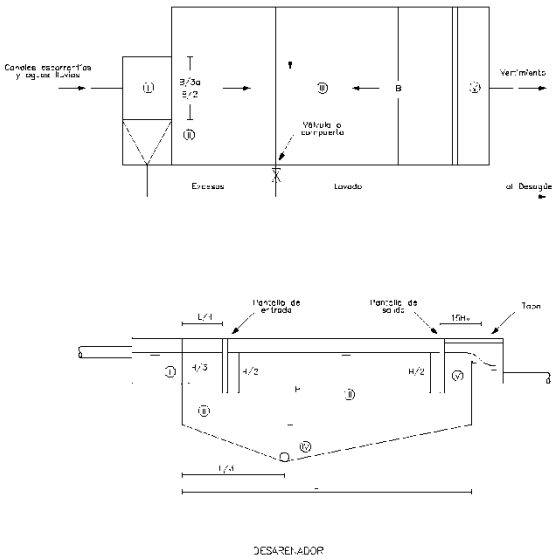


**Figure 4-5: Sedimentation scheme**

- **Design of the Settler**

The dimensions of the settlers will be defined in the RAS 2000, thereby ensuring the compliance with the established parameters:

– **Sedimentation rate**. Defined by the following equation:

$$V_s = \frac{(\rho_s - \rho) g d^2}{18\mu}, \text{ Where}$$

- $\rho_s$ : Specific weight of the sand.
- $\rho$: Specific weight of the water.
- G= gravity.

- $\mu$: Kinematic viscosity
- D = diameter particles.

– **Time of sedimentation.** Which is estimated as follows:

$$t_s = \frac{h}{V_s}, \text{ Where}$$

- H: useful depth of the settler
- Vs: sedimentation rate

– **Hydraulic retention time.** Which is exposed by the following expression:

$$TRH = \phi \times t_s, \text{ Where}$$

- Φ: Particle diameter to remove
- TS: Sedimentation Time

– **Volume of the tank**. Which is calculated as follows:

$$v = Q \times TRH, \text{ Where}$$

- Q: design flow
- TRH: Hydraulic retention time

– **Surface area.** That is calculated using the expression

$$A_s = \frac{v}{H}, \text{ Where}$$

- v: Volume of the tank
- H: Useful Depth of the tank

– **Width of the tank.** Calculated by the equation:

$$B = \sqrt{\frac{A_s}{4}}$$

Where A is the surface area

– **Length of the tank**. It is estimated with the ratio L: B, 4:1

Table 4-11 shows the coordinates of the sections in the streams, where the discharge of wastewater generated during the construction and operation of the El Molino hydroelectric project will take place, as well as the useful depth and the depth of the sediment area, assuming the following:

**Table 4-11: Location of discharge in the El Molino hydroelectric project**

| Infrastructure | Stream | System | Coordinates of the section | | Useful Depth (m) | Zone of sediment depth (m) | Flow (l/s) |
|---|---|---|---|---|---|---|---|
| | | | X (East) | Y (North) | | | |
| Collection - Tank M5 | San Matias River | Septic tank, anaerobic filter, grease trap , | 880,829<br>881,150 | 1.162.570<br>1.162.650 | 2 | 0.75 | 4.6 |

| | | | | | | | |
|---|---|---|---|---|---|---|---|
| | | settler | | | | | |
| Deposit M3 | Creek NN | Settler | 880,685<br>880,837 | 1,161,959<br>1,162,207 | 1.5 | 0.75 | 0.1 |
| Exit Portal of the tunnel - Almenara | Creek 6 | Septic tank, anaerobic filter, grease trap , settler | 882,188<br>882,204 | 1,160,538<br>1,160,684 | 1.5 | 1.5 | 0.7 |
| House of engines zone | San Matias River | Septic tank, anaerobic filter, grease trap , settler | 882,998<br>883,198 | 1,160,908<br>1,160,822 | 1.5 | 1.0 | 0.7 |
| Deposit SM4 | San Matias River | Settler | 883,365<br>882,545 | 1,160,695<br>1,160,585 | 1.5 | 0.75 | 0.1 |
| Deposit SM2 | San Matias River | Settler | 883,832<br>883,985 | 1,160,397<br>1,160,327 | 1.5 | 0.75 | 0.1 |
| Deposit SM3 | Creek 4 | Settler | 883,275<br>883,616 | 1,160,457<br>1,160,527 | 1.5 | 0.75 | 0.1 |
| Camp, workshop, industrial zone | River Cocorná | Septic tank, anaerobic filter, grease trap , settler | 884,794<br>885,025 | 1,159,159<br>1,159,471 | 1.5 | 1.5 | 1.5 |

- Water Temperature: 22 °C.
- Particle diameter to remove: 0,005 Cm
- % Removal= 87.5 %
- Length of the settler: 4 M

The proposed dimensions may change, if the constructor changes the relationship Length - Width. Although it always must comply with the Decree 1594 of 1984, as to the characteristics of the effluent, as defined in Article 72.

In addition to estimate flow rates to pour it is assumed that:

- For the domestic residual water it is assumed to be a return coefficient of 80 %, to a population whose demand for water is 140 l-hab/day.
- It is assumed that 90% of the rinse water from the sand and gravel as residual water.
- 40% Of the water used for wetting of roads, car-washing and maintenance of work areas, will return as residual water
- 80% of the water used for the construction of the tunnel and the window will return as residual water.

Annex 15 presents the forms for the permits for discharge, and in Annex 16 it is observed a prefabricated treatment system, that could be used in the collection areas, house of engines and exit portal of the tunnel.

## 4.4 FOREST RESOURSES

In the influence area of the project it was identified the forest coverage of open land, dense forest of Guadua, high secondary vegetation, low secondary vegetation, Grass trees, grass weeded, clean grass.

From Table 4-12 to

Table 4-18 , you will find the species registered in each of the identified areas.

**Table 4-12. Registered species for the dense forest of Guadua**

| # | Scientific name | Common Name | Family | Number of individuals |
|---|---|---|---|---|
| 1 | *Guadua angustifolia* | Guadua | Poaceae | 138 |
| 2 | *Miconia elata* | Colorado mortiño | Melastomataceae | 6 |
| 3 | *Cupania cinerea* | Cariseco, mestizo | Sapindaceae | 1 |
| 4 | *Persea americana* | | Lauraceae | 1 |
| 5 | *Ocotea macropoda* | Laurel | Lauraceae | 1 |
| 6 | *Rollinia edulis* | Mahoe | Annonaceae | 1 |
| 7 | *Cinnamomum triplinerve* | Laurel Perillo | Lauraceae | 1 |
| 8 | *Ficus maximum* | Rubber | Moraceae | 1 |
| 9 | *Miconia decurrens* | White mortiño | Melastomataceae | 1 |
| **Overall Total** | | | | **151** |

**Table 4-13. Recorded Species for the open forest**

| Scientific name | Family | Common Name | Number of individuals |
|---|---|---|---|
| *Pourouma hirsutipetiolata* | Urticaceae | Cirpo | 26 |
| *Hedyosmum racemosum* | Chloranthaceae | Silbasilba, hail | 27 |
| *Euterpe precatoria* | Arecaceae | Palm-kernel oil, macana | 15 |
| *Cecropia angustifolia* | Urticaceae | Yarumo, Yarumo black | 4 |
| *Miconia elata* | Melastomataceae | Colorado mortiño | 2 |
| *Miconia decurrens* | Melastomataceae | White mortiño | 4 |
| *Arboretum Hyptidendron* | Lamiaceae | Aguanoso, white and black vulture, Borrajo | 2 |
| *Cupania cinerea* | Sapindaceae | Mantequillo, cariseco, Guacharaco, mestizo | 1 |
| *Ficus sp. 2* | Moraceae | Salary | 1 |
| *Myrcia sp. 2* | Myrtaceae | | 1 |

**Table 4-13. Recorded Species for the open forest (Continued)**

| Scientific name | Family | Common Name | Number of individuals |
|---|---|---|---|
| *Eugenia florida* | Myrtaceae | | 1 |
| *Ocotea macropoda* | Lauraceae | Laurel | 1 |
| *Tetrorchidium robledoanum* | Euphorbiaceae | | 1 |
| *Cecropia peltata* | Urticaceae | Yarumo | 1 |
| *Cordia sp.* | Boraginaceae | | 1 |
| **Total** | | | **88** |

**Table 4-14. Recorded Species for the high secondary vegetation**

| Scientific name | Family | Common Name | Number of individuals |
|---|---|---|---|
| *Pourouma hirsutipetiolata* | Urticaceae | Cirpo | 38 |
| *Hedyosmum racemosum* | Chloranthaceae | Silbasilba, hail | 9 |
| *Hasseltia sp.* | Salicaceae | | 10 |
| *Vismia sp. 2* | Hypericaceae | Tongue Tip | 6 |
| *Castilla elastic* | Moraceae | Black Rubber, rubber female | 7 |
| *Guatteria bolivian* | Annonaceae | Garrapato | 5 |
| *Discolor Piptocoma* | Asteraceae | Vulture, mulato, pigweed | 5 |
| *Miconia decurrens* | Melastomataceae | White mortiño | 5 |
| *Miconia elata* | Melastomataceae | Colorado mortiño | 6 |
| *Inga thibaudiana* | Fabaceae | | 4 |
| *Cordia dwyeri* | Boraginaceae | Arm of tiger, hen paw | 4 |
| *Arboretum Hyptidendron* | Lamiaceae | Aguanoso, white and black vulture, Borrajo | 3 |
| *Vismia macrophylla* | Hypericaceae | Seven hides | 2 |
| *Ficus nymphaeifolia* | Moraceae | Rubber | 1 |
| *Cecropia angustifolia* | Urticaceae | Yarumo, Yarumo black | 3 |
| *Gloeospermum sp.* | Violaceae | | 2 |
| *Guadua angustifolia* | Poaceae | Guadua | 3 |
| *Vismia baccifera* | Hypericaceae | Carate, sealing wax | 2 |
| *Nectandra sp. 1* | Lauraceae | | 1 |
| *Cinnamomum triplinerve* | Lauraceae | Laurel Perillo, laurel, aguacatillo | 2 |
| *Rollinia edulis* | Annonaceae | Mahoe | 1 |
| *Unonopsis sp.* | Annonaceae | | 1 |
| *Indet. 2* | Indet. 2 | | 1 |
| *Inga alba* | Fabaceae | Churimo | 1 |
| *Echinoderms exhibit fivefold Bellucia* | Melastomataceae | Coronillo, guava of pava, guava of Monte,guava from mico | 1 |
| *Regia Welfia* | Arecaceae | Thousand pesos, San Juan | 1 |
| *Miconia dolichorrhyncha* | Melastomataceae | White mortiño | 1 |
| *Ocotea macropoda* | Lauraceae | Laurel | 1 |
| *Hieronyma sp.* | Phyllanthaceae | Leno | 1 |
| *Alchornea megalophylla* | Euphorbiaceae | | 1 |
| *Casearia arborea* | Salicaceae | Niguito, Escobo, Espadero | 1 |
| *Inga sp. 8* | Fabaceae | | 1 |
| *Erythroxylum citrifolium* | Erythroxylaceae | Coca | 1 |
| *Euterpe precatoria* | Arecaceae | Palmichal, macana | 1 |
| *Lacistema aggregatum than* | Lacistemataceae | Mountain Coffeet. | 1 |
| **Total** | | | **133** |

**Table 4-15. Recorded species for the secondary low vegetation**

| Scientific name | Family | Common Name | Number of individuals |
|---|---|---|---|
| *Discolor Piptocoma* | Asteraceae | Vulture, mulato, pigweed | 11 |
| *Vismia baccifera* | Hypericaceae | Carate, sealing wax | 9 |
| *Miconia elata* | Melastomataceae | Colorado mortiño | 3 |
| *Myrsine pellucidopunctata* | Primulaceae | Espadero | 1 |
| *Vismia macrophylla* | Hypericaceae | Seven hides | 1 |
| *Cupania cinerea* | Sapindaceae | Mantequillo, cariseco, Guacharaco, mestizo | 1 |
| **Total** | | | **26** |

**Table 4-16. Recorded species for the clean grass fields**

| Scientific name | Family | Common Name | Number of individuals |
|---|---|---|---|
| *Miconia elata* | Melastomataceae | Colorado mortiño | 3 |
| *Psidium guajava* | Myrtaceae | Guayabo | 2 |
| *Hymenaea courbaril* | Fabaceae | Algarrobo, pecueca almohada | 1 |
| *Schefflera morototoni* | Araliaceae | Arracacho | 1 |
| *Discolor Piptocoma* | Asteraceae | Vulture, mulato, pigweed | 1 |
| *Ficus popayanensis* | Moraceae | Salary | 1 |
| *Myrsine pellucidopunctata* | Primulaceae | Espadero | 1 |
| **Total** | | | **10** |

**Table 4-17. Recorded Species for the wooded grass fields**

| # | Scientific name | Common Name | Family | Number of individuals |
|---|---|---|---|---|
| 1 | *Discolor Piptocoma* | Turkey Vulture | Asteraceae | 46 |
| 2 | *Psidium guajava* | Guayabo | Myrtaceae | 6 |
| 3 | *Jacaranda copaia* | Chingale | Bignoniaceae | 7 |
| 4 | *Schefflera morototoni* | Arracacho | Araliaceae | 2 |
| 5 | *Myrsine pellucidopunctata* | Espadero | Primulaceae | 2 |
| 6 | *Vismia baccifera* | Carate | Hypericaceae | 1 |
| 7 | *Hymenaea courbaril* | Algarrobo | Fabaceae | 1 |
| 8 | *Vismia sp. 2* | Punta del Este'e tiller | Hypericaceae | 1 |
| 9 | *Nectandra cuspidata* | Laurel pavito | Lauraceae | 1 |
| 10 | *Rhodostemonodaphne kunthiana* | | Lauraceae | 1 |
| 11 | *Vismia macrophylla* | Seven hides | Hypericaceae | 1 |
| 12 | *Echinoderms exhibit fivefold Bellucia* | Guayabo IMCO | Melastomataceae | 1 |
| **Overall Total** | | | | **70** |

**Table 4-18. Recorded Species for the weedy grass fields**

| Scientific name | Common Name | Family | Number of individuals |
|---|---|---|---|
| *Psidium guajava* | Guayabo | Myrtaceae | 5 |
| *Schefflera morototoni* | Arracacho | Araliaceae | 5 |
| *Myrsine pellucidopunctata* | Espadero | Primulaceae | 3 |
| *Miconia dolichorrhyncha* | White mortiño | Melastomataceae | 3 |
| *Miconia elata* | Colorado mortiño | Melastomataceae | 2 |
| *Vismia macrophylla* | Seven hides | Hypericaceae | 2 |
| *Discolor Piptocoma* | Vulture, mulato, pigweed | Asteraceae | 1 |
| *Calophyllum brasiliense* | Oil, Oil mary, barcino | Calophyllaceae | 1 |
| *Marila geminata* | | Calophyllaceae | 1 |
| *Cinnamomum triplinerve* | Laurel Perillo, laurel, aguacatillo | Lauraceae | 1 |
| *Cespedesia spathulata* | Paco, Pedro boys read, Alejandro, language e' cow | Ochnaceae | 1 |
| *Vismia sp. 2* | Tongue Tip | Hypericaceae | 1 |
| ***Total*** | | | **26** |

Table 4-19 shows the volume estimates per hectare and to be removed, and Annex 17 presents the application form for forest resources.

**Table 4-19. Estimates of basal area and volume of coverage in the area of project intervention.**

| Coverage | AAH | Inventory Values | | | | Per-hectare values | | | Values to Extract | | |
|---|---|---|---|---|---|---|---|---|---|---|---|
| | | AIS | TV | CV | BA | TV | CV | BA | TV | VC | BA |
| Open forest land | 1.46 | 0.10 | 0.41 | 0.21 | 0.04 | 4.12 | 2.15 | 0.45 | 6.04 | 3.14 | 0.65 |
| Dense Forest of Guadua | 0.41 | 0.10 | 0.42 | 0.01 | 0.04 | 4.21 | 0.11 | 0.41 | 1.71 | 0.05 | 0.17 |
| Secondary high Vegetation | 3.43 | 0.20 | 0.20 | 0.01 | 0.02 | 0.98 | 0.06 | 0.12 | 3.38 | 0.20 | 0.41 |
| Low secondary vegetation | 3.21 | 0.20 | 0.03 | 0.01 | 0.005 | 0.15 | 0.05 | 0.02 | 0.47 | 0.15 | 0.08 |
| Wooded grass fields | 7.61 | 0.40 | 0.03 | 0.02 | 0.005 | 0.08 | 0.04 | 0.01 | 0.63 | 0.31 | 0.10 |
| Weeded Grass Fields | 1.99 | 0.30 | 0.01 | 0.01 | 0.002 | 0.05 | 0.02 | 0.01 | 0.09 | 0.04 | 0.02 |
| Clean Grass Field | 10.72 | 0.50 | 0.01 | 0.002 | 0.001 | 0.01 | 0.00 | 0.00 | 0.11 | 0.04 | 0.02 |
| **Total** | **28.82** | **1.80** | **1.11** | **0.27** | **0.12** | **9.61** | **2.43** | **1.02** | **12.43** | **3.93** | **1.44** |

Where: AAH: area to be affected in ha, AIM: area inventoried in sampling, BA= basal area expressed in square meters; VC= commercial volume in cubic meters; TV= total volume in cubic meters.

## 4.5 ATMOSPHERIC EMISSIONS

For the construction of the El Molino hydroelectric project, the cement mixers will be of two bags each, with a useful mixing capacity of 255 l, and will be placed in the collection area, in the portal of the access tunnel and house of engines.

The thick granular - material necessary for the construction will come from the underground excavations of the project, which will be processed in two crushing plants; the first located in

the collection area, which will have a grinding capacity 7,500 $m^3$ , and the second installed in the sector of the house of engines, which could grind 6,500 $m^3$ .

The areas where these equipment will be placed are defined by the coordinates presented in table Table 4.20

**Table 4.20. Location coordinates for grinding plants**

| Grinding Plant | X(E) | Y(N) |
|---|---|---|
| Collection (cement mixer and grinder) | 880,792<br>880,840<br>881,005<br>881,048 | 1,162,487<br>1,162,424<br>1,162,508<br>1,162,545 |
| House of engines (cement mixer) | 882,864<br>882,856<br>882,990<br>889,984 | 1,160,706<br>1,160,593<br>1,160,588<br>1,160,725 |
| Exit of driving tunnel (grinder) | 882,314<br>882,391<br>882,402<br>882,312 | 1,160,602<br>1,160,596<br>1,160,529<br>1,160,529 |

These plants generally function by electrical power. The processed material will be moistened to control emissions

## 4.6 SOLID WASTE

The final disposition of each type of waste will be adjusted to what is stated in the Colombian non-recyclable waste shall be deposited in the landfill of the municipality of Cocorná; for hazardous waste it shall comply with what's established in the Decree 4741 of 2005.

## 4.7 CONSTRUCTION MATERIALS

The thick and fine granular material necessary for the construction of the project, will come mainly from the holdings legally established in the area and must have their mining permits and environmental licenses up to date. In addition, the granular - material obtained in the underground excavations of the project, which is estimated at 20,000 $m^3$ will be processed in two grinding plants located at the end of the driving tunnel and in the collection area; each can grind up to 6,500 cu m.

It is not scheduled to open new fronts of exploitation in the area, or perform removal of material or dragging in the channels of the water flows.

It is estimated a total demand of 6,000 $m^3$ of sand, 8,000 $m^3$ of aggregate concrete and 5,600 $m^3$ of granular base material for the paths.

## 4.8 DEPOSIT AREAS

The deposit areas selected for the El Molino hydroelectric project are presented in Table 4.23, and the design is presented in Cartography 2148-04-CV-DW-76 and 2148-04-CV-DW-77

**Table 4.21. Deposits of excess material from excavation**

| Tank | Location | Capacity ($m^3$) |
|---|---|---|
| M1 | It is located on the top of the hill, in the right margin of the road which leads to the Vereda (Political and administrative division of the municipality located in the rural area) el Molino, less than 300 m from the start of the road to the collection area. It will be used for materials coming from the excavation of the access path, to the exit portal of the tunnel and the conduction tunnel. | 200,000 |
| M2 | It is located south of the village El Molino and to the east of tank M1. It wil be used for materials from the excavation of the access paths to the exit portal of the tunnel and the conduction tunnel | 230,000 |
| M3 | It is located in the abscissa Km0+690m of the path of collection, and this will receive materials from the excavation of this road and the bare soil materials. | 235,000 |
| M4 | It is located in the abscissa Km1+100m of the road of collection and it will be filled with materials from the excavations. | 120,000 |
| M5 | It will be used for materials from the excavation of the tunnel, and it is adjacent to the portal entrance of the tunnel | 65,000 |
| SM2 | It will store materials from the excavation of the road and bare soil materials and it is located toward the bottom of the road to the house of engines, close to the abscissa Km0+400m | 23,000 |
| SM3 | Materials will be obtained from the excavation in the adequacy of the house of engines area and it is located toward the top of the road to the house engines, close to the abscissa Km0+750m. | 100,000 |
| SM4 | Located on the road to the house of engines, close to the abscissa Km1+490m and materials will be available from the excavations of this road and the adequacy of the Plaza of house of engines and the substation. | 85,000 |